COSTWAY®

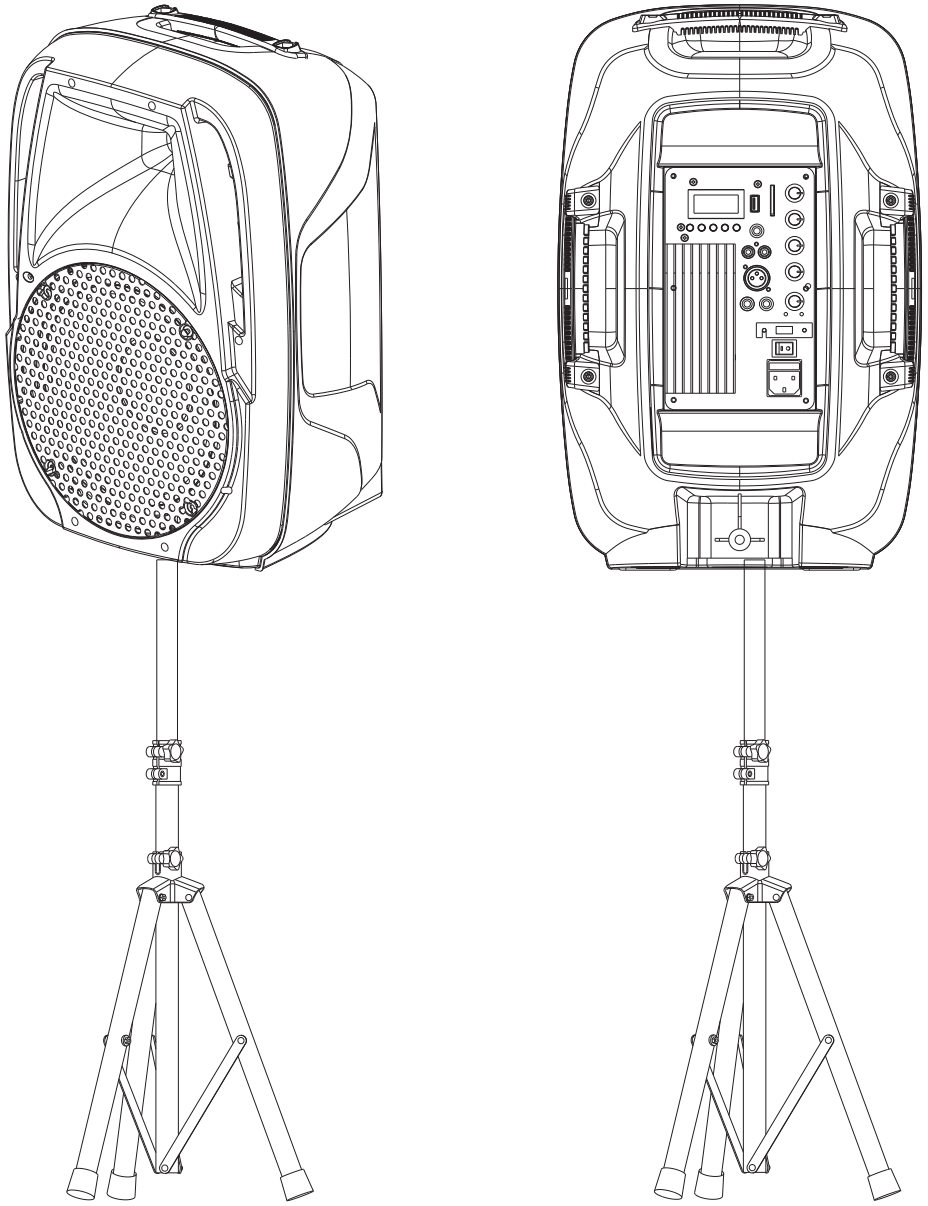

USER'S MANUAL

SPEAKER BOX
EP23880

THIS INSTRUCTION BOOKLET CONTAINS **IMPORTANT** SAFETY INFORMATION. PLEASE READ AND KEEP FOR FUTURE REFERENCE.

Before You Start

- Please read all instructions carefully.
- Retain instructions for future reference.
- Separate and count all parts and hardware.
- Read through each step carefully and follow the proper order.
- We recommend that, where possible, all items are assembled near to the area in which they will be placed in use, to avoid moving the product unnecessarily once assembled.
- Always place the product on a flat, steady and stable surface.
- Keep all small parts and packaging materials for this product away from babies and children as they potentially pose a serious choking hazard.

INDEX

OPERATION.....1
GENERAL USE INSTRUCTIONS.....2
SPECIFICATIONS.....2
CONTROLS AND CONNECTIONS.....3

- **CAUTION, TO REDUCE THE RISK OF ELECTRIC SHOCK, DO NOT REMOVE COVER [OR BACK]**
- **THIS PRODUCT MUST BE EARTHED**
- **NO USER-SERVICEABLE PARTS INSIDE, REFER SERVICING TO QUALIFIED SERVICE PERSONNEL**

OPERATION

1. Prior to switching on, turn volume down to minimum.
2. Connect the audio source to the appropriate Input socket.
3. Another Speaker can be connected to the output socket, so that several boxes can be daisy chained.
4. Connect to the mains supply.
5. Switch on the audio source, followed by the active speaker.
6. Set the volume with the applicable control.
7. Adjust the bass + treble.

INSTRUCTIONS

- Do not overload the box to avoid damage to the speakers.
- Do not place an open fire (candles etc) on top or next to the box - FIRE HAZARD
- Only connect to an **earthed** mains outlet of 110/220v AC/60-50Hz.
- For indoor use only. If the box is used outdoors, you need to make sure that no humidity can enter the box.
- When not in use, unplug the unit from the mains.
- Unplug the unit from the mains prior to checking or replacing the fuse.
- Make sure that the box is placed on a stable, strong surface.
- The boxes can be hung. Use only strong and approved mounting material. During the mounting, make sure that nobody is standing below the mounting area.
- Do not place liquids on the box and protect it against humidity. Humidity can shorten the life time considerably.
- Only use suitable means of transportation if you want to move the box - BEWARE OF YOUR BACK !!
- Always unplug the unit during a thunderstorm or when it is not in use.
- If the unit has not been used for a long period of time, condensation can occur inside the housing. Please let the unit reach room temperature prior to use.
- Never try to repair the unit yourself. It does not contain any user serviceable parts.
- Run the mains lead in such a way that nobody can fall over it and nothing can be put in it.
- Set the unit to the lowest volume prior to switching it on.
- Keep the unit out of the reach of children.

SPECIFICATIONS

	10"Speaker box
System	Active 2-way full range
Woofer	10”
Tweeter	1”
Peak Power	1600W
RMS power	150W
Impedance	8 ohm
Frequency Range	60Hz-18KHz
Sensitivity	98dB (+/- 2dB)
Connector	XLR/6.35mm/RCA
Mic Input Level	<5mV
Line Input/Output Level	250mV
Voltage	110/220v AC/60-50Hz

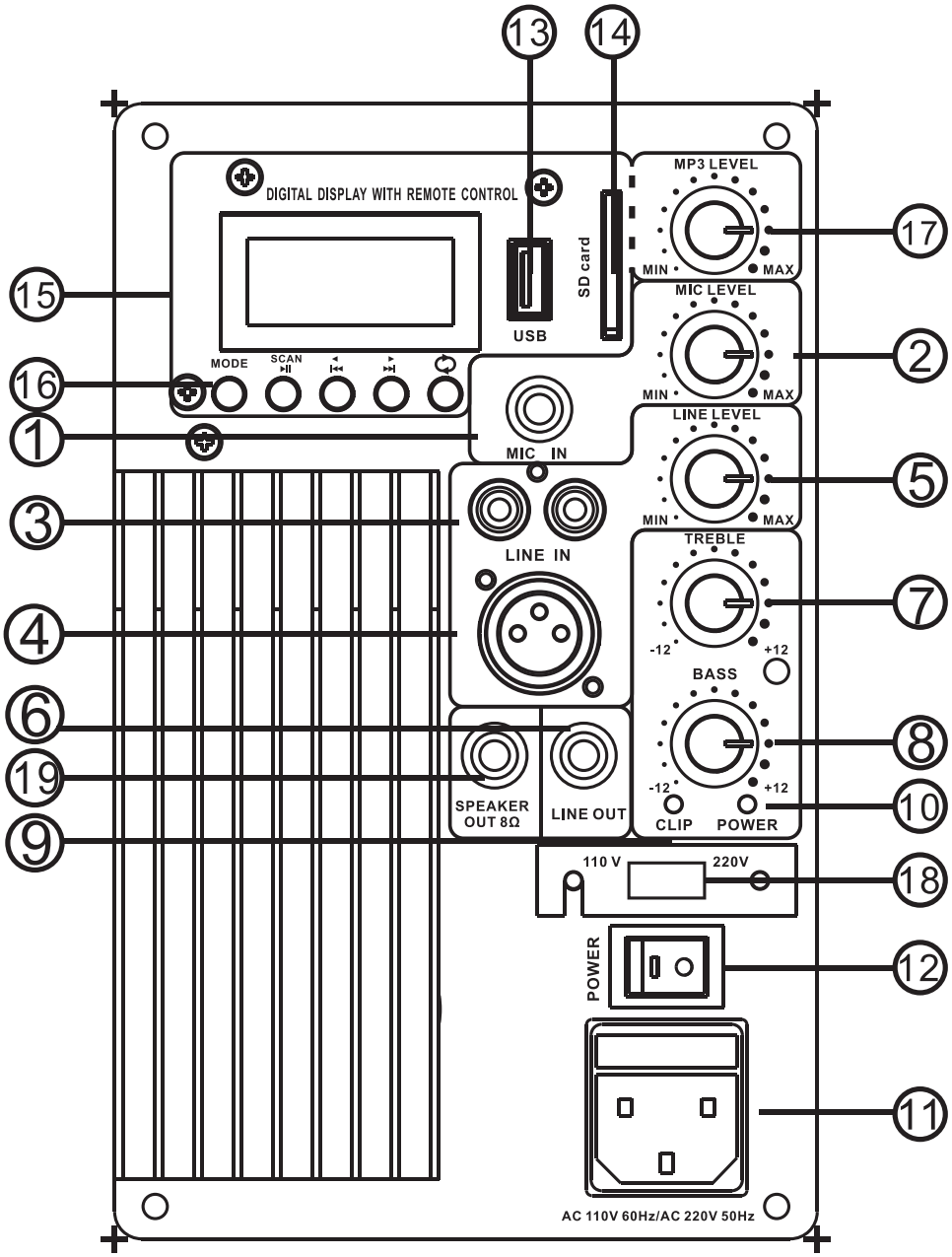

1.6.35mm microphone(unbalanced)input
2.Mic input level control
3.RCA phono line inputs
4.XLR line input
5.Line input level control
6.6.35mm line output(unbalanced)
7.Treble control for high frequencies
8.Bass control for low fequenncies
9.Clip LED indicator
10.Power LED indicator
11.Fused IEC mains inlet
12.Mains power switch
13.USB input
14.SD Card
15.LCD screen
16.MP3 player control
17.MP3 input level control
18.110/220V switch
19.Speaker out 8 ohm

Please give us a chance to make it right and do better !

Contact our friendly customer service department for help first.
Replacements for missing or damaged parts will be shipped ASAP !

US office: Fontana **UK** office: Ipswich **AU** office: Truganina
DE office: Hamburg **FR** office: Saint Vigor d'Ymonville **PL** office: Gdańsk

COSTWAY®

Contact Us!

Do NOT return this item.

Contact our friendly customer service department for help first.

US:cs.us@costway.com
UK:cs.uk@costway.com
AU:cs.au@costway.com

FCC Statement

This equipment has been tested and found to comply with the limits for a Class B digital device, pursuant to part 15 of the FCC Rules. These limits are designed to provide reasonable protection against harmful interference in a residential installation. This equipment generates, uses and can radiate radio frequency energy and, if not installed and used in accordance with the instructions, may cause harmful interference to radio communications. However, there is no guarantee that interference will not occur in a particular installation. If this equipment does cause harmful interference to radio or television reception, which can be determined by turning the equipment off and on, the user is encouraged to try to correct the interference by one or more of the following measures:

- Reorient or relocate the receiving antenna.
- Increase the separation between the equipment and receiver.
- Connect the equipment into an outlet on a circuit different from that to which the receiver is connected.
- Consult the dealer or an experienced radio/TV technician for help.

Caution: Any changes or modifications to this device not explicitly approved by manufacturer could void your authority to operate this equipment.

This device complies with part 15 of the FCC Rules. Operation is subject to the following two conditions: (1) This device may not cause harmful interference, and (2) this device must accept any interference received, including interference that may cause undesired operation.

RF Exposure Information

This equipment complies with FCC radiation exposure limits set forth for an uncontrolled environment. This equipment should be installed and operated with minimum distance 20cm between the radiator and your body.