CS-63016-XX

BLE Module User's Suide

Dyaco International Inc.

12F,No.111,Songjiang Road, Taipei City ,Taiwan
R.O.C
TEL ：+886-2-2515-2288
FAX ：+886-2-2515-9963

Version:0.1
2014/12/02

1. Introduction

The SS-HYB70B01FC2 Bluetooth® module is design for Bluetooth® standard BLE electronic accessories via Bluetooth® connectivity.
It is available in the 2.4GHz ISM band Class 2 Radio, compatible with Bluetooth® Core Specification Version 4.2

1.1. Operational

- Single operating voltage: 1.9V to 3.6V
- Temperature range: -20℃ to +70℃ Industrial
- Simple, UART interface
- Integrated crystal, internal voltage regulator, and matching circuitry
- Multiple I/O pins for control and status
- RF transmitter output power Class 2
- RF receiver GFSK typical -90dBm, π/4 PSK typical -90dBm, 8DPSK typical -83dBm, BLE typical -92dBm
- 1 LED driver

1.2. RF Features

• ISM Band 2.402 GHz to 2.480 GHz operation
• Channels: 0-39
• Receive Sensitivity: typical -90 dBm (LE)
• Transmit Power: 0 dBm (typical)
• Received Signal Strength Indication (RSSI) monitor with 1 db resolution

1.3. Application

• Internet of Things (IoT)
• Payment or Security
• Wearable Devices
• Home and Security
• Health and Fitness
• Beacons
• Industrial and Data Logger

2.0 Device overview

The BM70/71 embedded 2.4 GHz Bluetooth version 4.2 BLE module is built around Microchip Technology IS1870/71 BLE System on Chip (SoC). The IS1870/71 SoC incorporates Bluetooth stack, power management subsystem, 2.4 GHz transceiver, and RF power amplifier. The user can embed Bluetooth functionality into any applications using the BM70/71 module.

SYSTEM BLOCK DIAGRAM

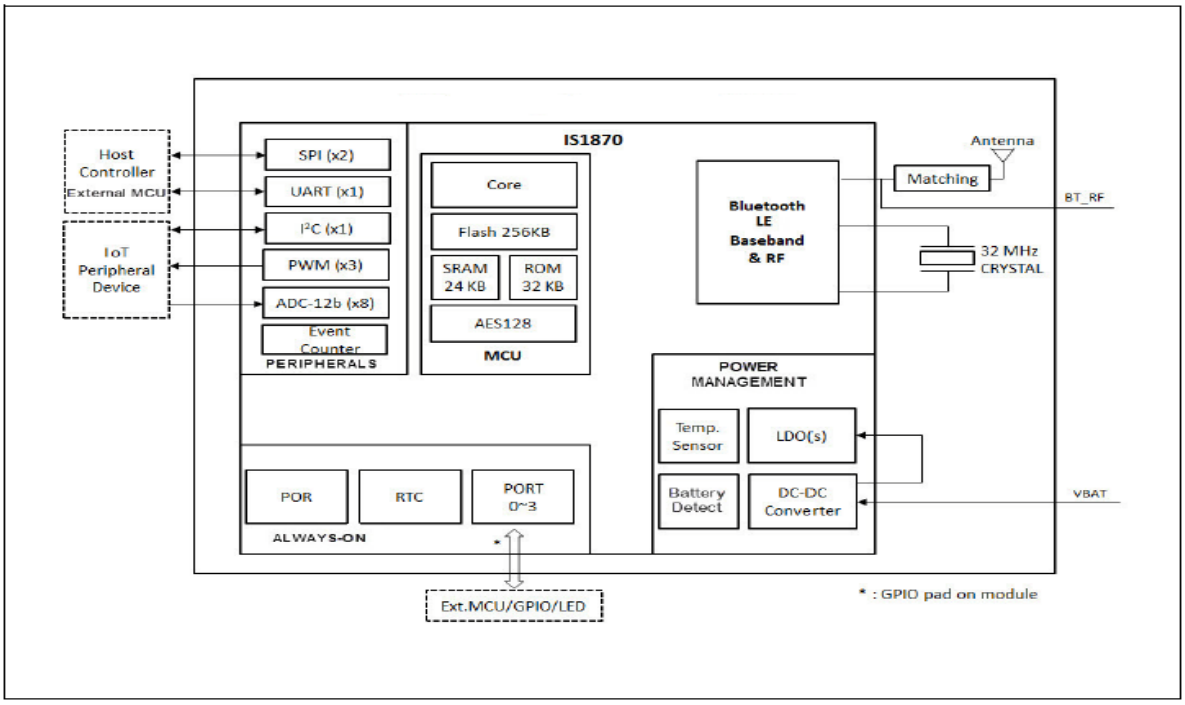

SS-HYB70B01FC2 PIN DIAGRAM

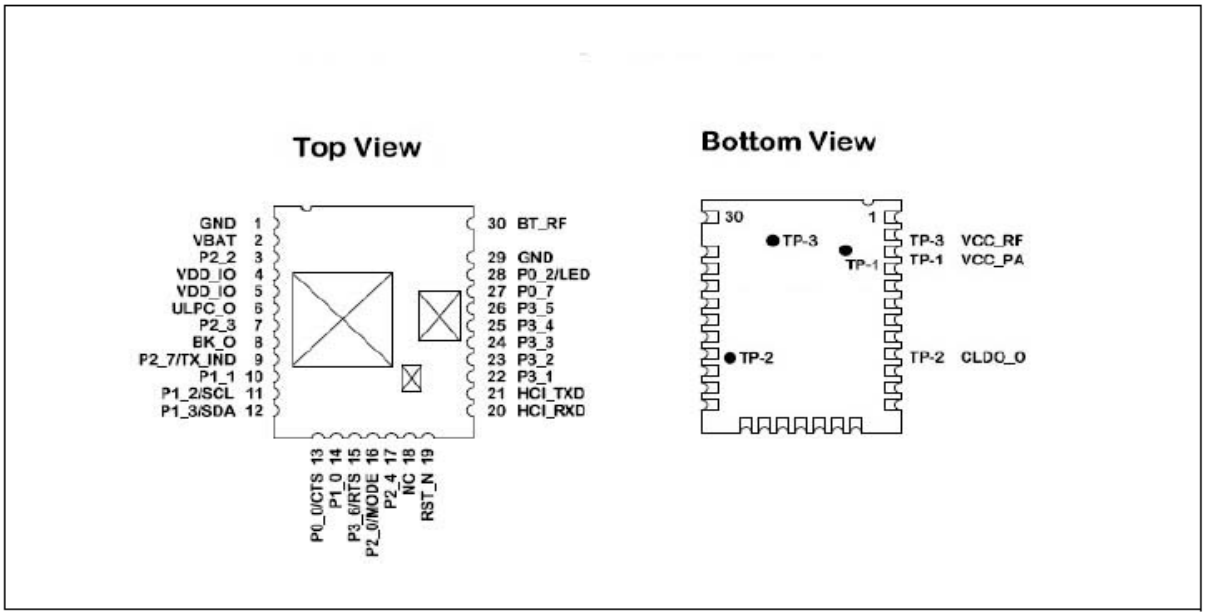

2.1. PIN DESCRIPTION

	Pin Name	Type	Description
1	GND	Power	Ground reference
2	VBAT	Power	Battery input. Voltage range: 1.9V to 3.6V
3	P2_2	DIO	GPIO, default pull-high input PWM1
4	VDD_IO	Power	I/O positive supply. Do not connect. Ensure VDD_IO and MCU I/O voltage are compatible
5	VDD_IO	Power	I/O positive supply. Do not connect. Ensure VDD_IO and MCU I/O voltage are compatible
6	ULPC_O	Power	1.2V programmable ULPC LDO output for AON-logic and retention memory supply. Internal use only, do not connect to other devices.
7	P2_3	DI	GPIO, default pull-high input PWM2
8	BK_O	Power	1.55V buck output. internal use only, do not connect to other devices.
7	P2_3	DI	GPIO, default pull-high input PWM2
8	BK_O	Power	1.55V buck output. internal use only, do not connect to other devices.
9	P2_7 _	DIO AI DO AO	GPIO: P2_7 ADC Input: AD14 TX_IND External 32.768 kHz crystal output: XO32K
10	P1_1	DIO AI DI	GPIO: P1_1 ADC Input: AD9 SPI bus: MISO2, second SPI bus (Master mode)
11	P1_2	DIO AI I/O	GPIO, default pull-high input AD10 I^2C SCL
12	P1_3	DIO AI DIO	GPIO, default pull-high input AD11 I^2C SDA
13	P0_0	DIO AI DI	GPIO, default pull-high input AD0 UART flow-control CTS
14	P1_0	DIO AI	GPIO, default pull-high input AD8
15	P3_6	DIO DO DO	GPIO, default pull-high input PWM0 UART flow-control RTS

	Pin Name	Type	Description
16	P2_0	DI	System configuration, default pull-high input H: Application mode L: Test mode
17	P2_4	DIO	GPIO, default pull-high input
18	NC	—	No connection
19	RST_N	DI	Module Reset (active-low) (internal pull-up)
20	HCI_RXD	DI	HCI UART data input
21	HCI_TXD	DO	HCI UART data output
22	P3_1	DIO DO	GPIO: P3_1 SPI bus: NCS, SPI Flash: CSN
23	P3_2	DIO DO	GPIO: P3_2 SPI bus: MISO, SPI Flash: SDO
24	P3_3	DIO DI	GPIO: P3_3 SPI bus: MOSI, SPI Flash: SDI
25	P3_4	DIO DO	GPIO: P3_4 SPI bus: SCLK, SPI Flash: SCK
26	P3_5	DIO DO	GPIO, default pull-high input LED1
27	P0_7	DIO AI	GPIO, default pull-high input AD7
28	P0_2/LED	DIO AI	P02 AD2
29	GND	Power	Ground reference
30	BT_RF	AI	External antenna connection (50 Ohm) Only for BM70BLE01FC2 and BM71BLE01FC2 NC for BM71BLES1FC2

3. Reference designed circuit

REFERENCE CIRCUIT

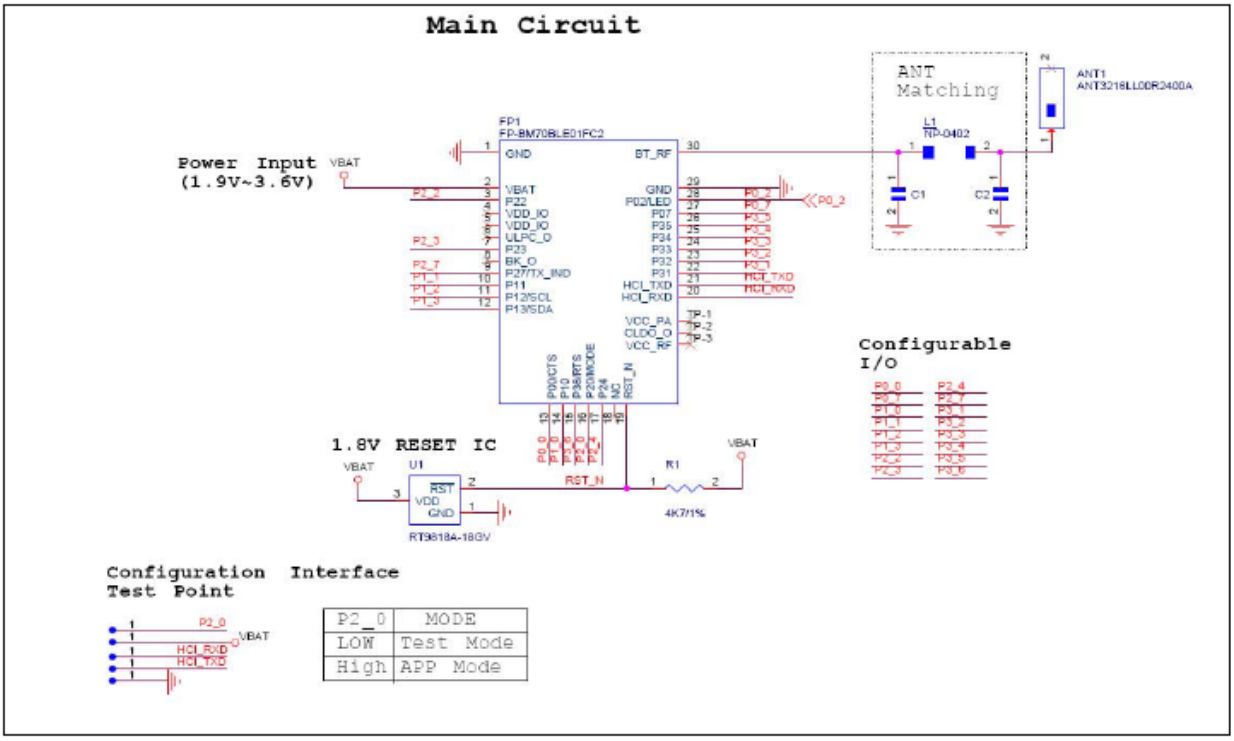

P2_0	MODE
LOW	Test Mode
High	APP Mode

REFERENCE CIRCUIT

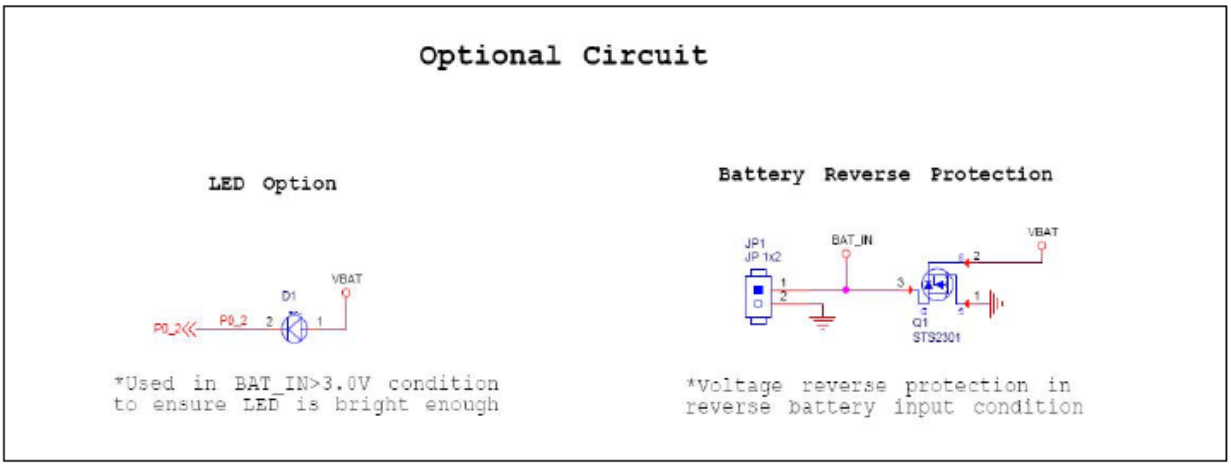

4. ELECTRICAL CHARACTERISTICS

This section provides an overview of the B70 modules electrical characteristics. Additional information will be provided in future revisions of this document. Absolute maximum ratings for the B70 devices are listed here. Exposure to the maximum rating conditions for extended periods may affect device reliability. Functional operation of the device at these or any other conditions, above the parameters indicated in the operation listings of this specification, is not implied.

4.1 Absolute Maximum Ratings

Ambient temperature under bias.....-20°C to +70°C

Storage temperature ..... -40°C to +125°C

Voltage on V_{DD} with respect to V_{SS} ..... -0.3V to +3.6V

Voltage of any digital pin .....-0.3V to V_{DD} + 0.3 ≤ 3.9

Maximum output current sunk by any I/O pin.....12 mA

Maximum output current sourced by any I/O pin.....12 mA

TABLE 4-1: RECOMMENDED OPERATING CONDITIONS

Symbol	Min.	Typ.	Max.
Ambient operating temperature range	–20°C	+25°C	+70°C
PMU			
VDD (VBAT, BK_IN), AVDD	1.9V	3.0V	3.6V
RST_N	1.9V	3.0V	3.6V
Other I/Os	1.9V	—	3.6V
GPIO			
VIH (Input High Voltage)	0.7 VDD	—	VDD
VIL (Input Low Voltage)	VSS	—	0.3 VDD
VOH (Output High Voltage) (High drive, 12 mA)	0.8 VDD	—	VDD
VOL (Output Low Voltage) (High drive, 12 mA)	VSS	—	0.2 VDD
Pull-up Resistance	34K	48K	74K
Pull-down Resistance	29K	47K	86K
Supply Current			
TX mode peak current at VDD=3V, TX=0dBm, Buck mode	—	—	13 mA
RX mode peak current at VDD=3V, Buck mode	—	—	13 mA
Link static current		60 µA	
Standby current	1.9 µA	—	2.9 µA
Power-Saving	1 µA	—	1.7 µA
Analog to Digital Converter (ADC)			
Full scale (BAT_IN)	0V	3.0V	3.6V
Full scale (AD0~AD15)	0V	—	3.6V
Conversion time (ENOB 8-bit)	—	131 µS	—
Conversion time (ENOB 10-bit)	—	387 µS	—
Operating current	—	—	500 µA
DNL	-1.12 LSB	—	+1.12 LSB
INL	-4.38 LSB	—	+4.38 LSB
Precise Temperature Sensor (PTS)			
Detect range	-20°C	—	+70°C
Digital Output	1387	—	2448
Resolution	—	12-bit/°C	—
Accuracy	-3°C	—	+3°C
Conversion time (ENOB 10-bit)	—	12.35 mS	—
Operating current	—	—	200 µA

TABLE 4-2: SS-HYB70B01FC2 APPLICATION MODE CURRENT CONSUMPTION

Test Mode/Test Condition		Average Current Consumption	Note
Standby Mode	Advertising Interval: 100 ms	0.23 mA	UI: Set as beacon
	Advertising Interval: 500 ms	0.077 mA	UI: Set as beacon
BLE Connected Mode (no data exchange)	Connection Interval: 500 ms Slave Latency: 2	0.08 mA	Measured when transparent page is open on the BLEDK3 Application.
Transparent Service Enable Mode Tx data	Connection Interval: 18.75 ms Slave Latency: 0	3.87 mA	Maximum Tx data throughput setting tested file size: 100 KB Tx data throughput: 9.863 KB/s
Transparent Service Enable Mode Tx data	Connection Interval: 40 ms Slave Latency: 0	2.77 mA	Tested File: 100 KB Tx data throughput: 4.676 KB/s
Transparent Service Enable Mode Rx data	Connection Interval: 18.75 ms Slave Latency: 0	3.06 mA (Write with response) 3.9 mA (Write with reliable Burst Transmit)	Maximum Rx data throughput setting tested file size: 100 KB Throughput: 4.956 KB/s (Write with response) 9.382 KB/s (Write with reliable Burst Transmit)
Transparent Service Enable Mode Tx data	Connection Interval: 40 ms Slave Latency: 0	2.14 mA (Write with response) 3.03 mA (Write with reliable Burst Transmit)	Tested File size: 100 KB Throughput: 2.494 KB/s (Write with response) 5.056 KB/s (Write with reliable Burst Transmit)
Shut Down mode		1.44 µA	

Note 1: Test condition: VBAT=3.3V, LED set off and measured in VBAT input.

2: Flash code version: BLEDK3 v1.03, UI version: IS187x_102_BLEDK3_UIv100.123.

3: Test phone: iPhone® 6+ with iOS 9.02.

4: Test application version: BLEDK3 V1.2.

5: UI set flow control and RX_IND.

6: For information on how to measure the current, refer to the *"IS187x_BM7x BLEDK3 Application Note"*.

5.0 PACKAGING INFORMATION

FIGURE 5-1: SS-HYB70B01FC2 MODULE DIMENSIONS

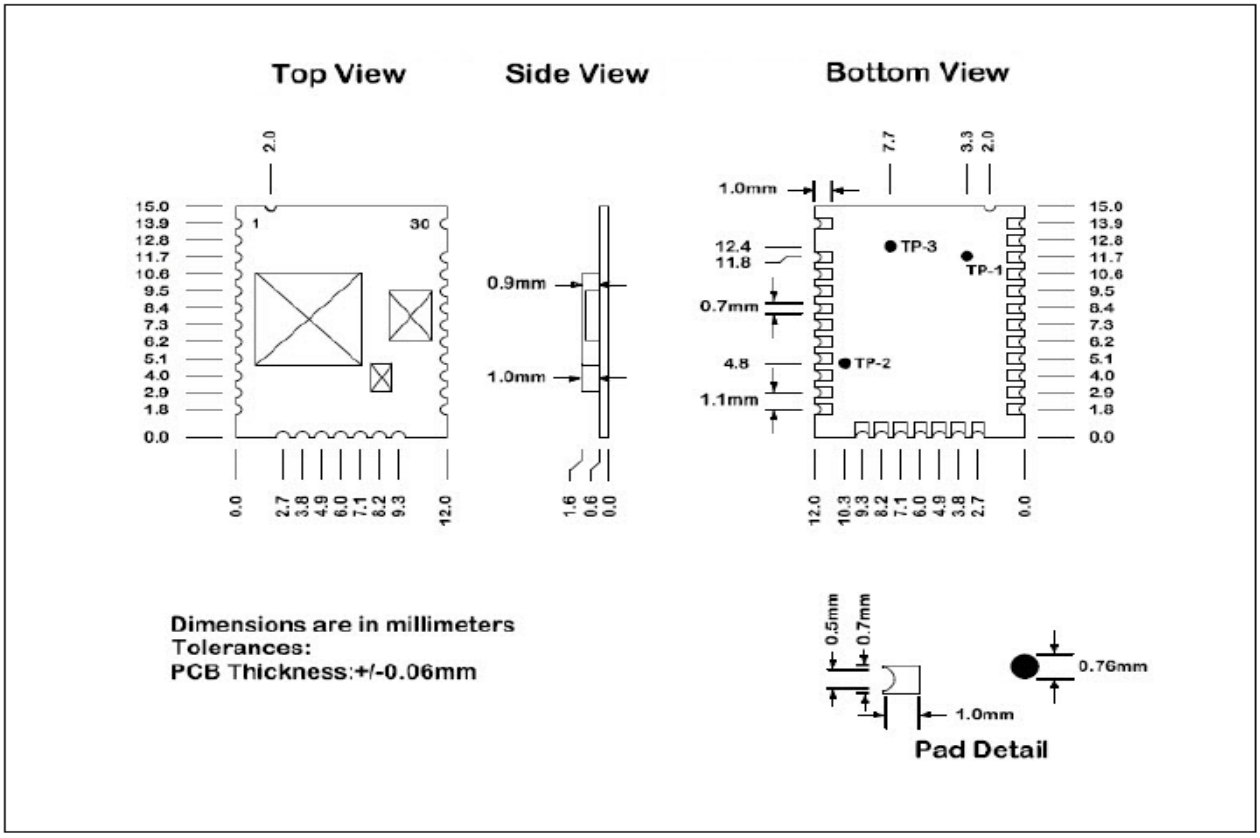

FIGURE 5-2: SS-HYB70B01FC2 RECOMMENDED PCB FOOT PRINT

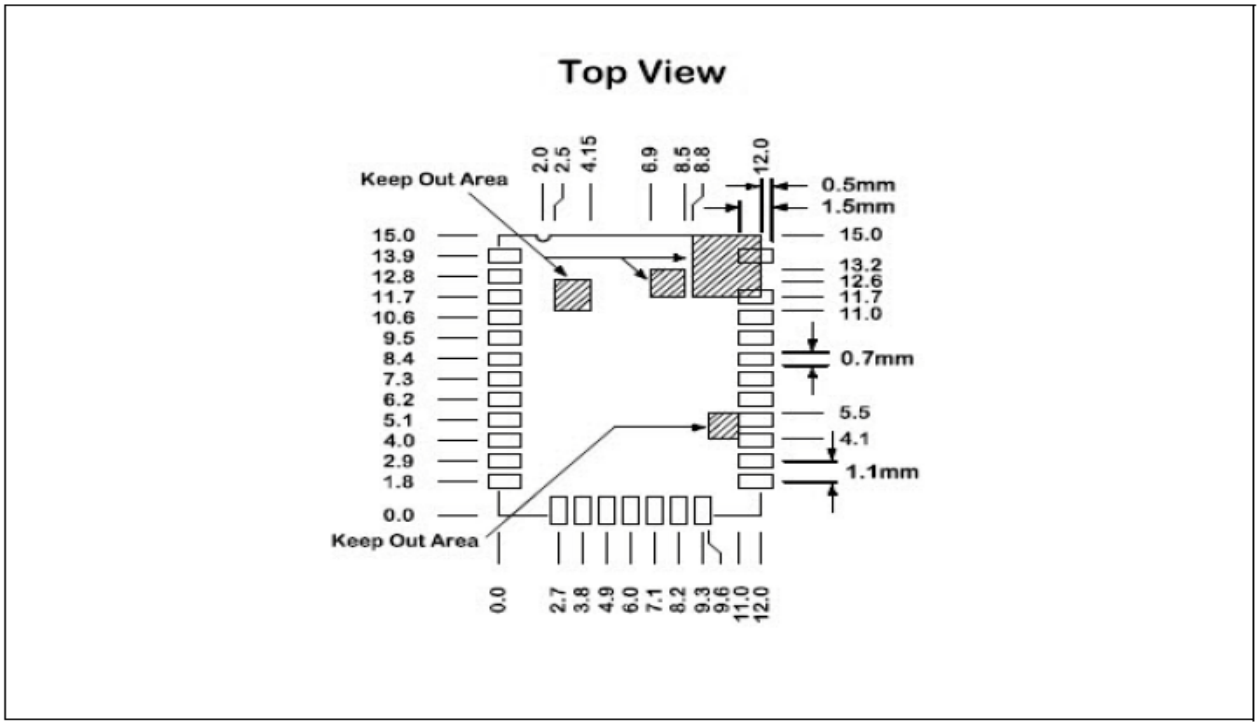

6.0 SOLDERING RECOMMENDATIONS

The B70 should be assembled using a standard lead-free, re-flow profile IPC/JEDEC J-STD-020. The module can be soldered to the host PCB using a standard lead or lead-free solder re-flow profiles, see Figure 6-1.

To avoid any damage to the B70, follow these recommendations:

- Do not exceed the peak temperature (TP) of +250°C
- Use no-clean flux solder paste
- Do not wash as moisture can be trapped under the shield
- Use only one flow. If PCB requires multiple flows, apply the module on the final flow.

FIGURE 6-1: RE-FLOW PROFILE

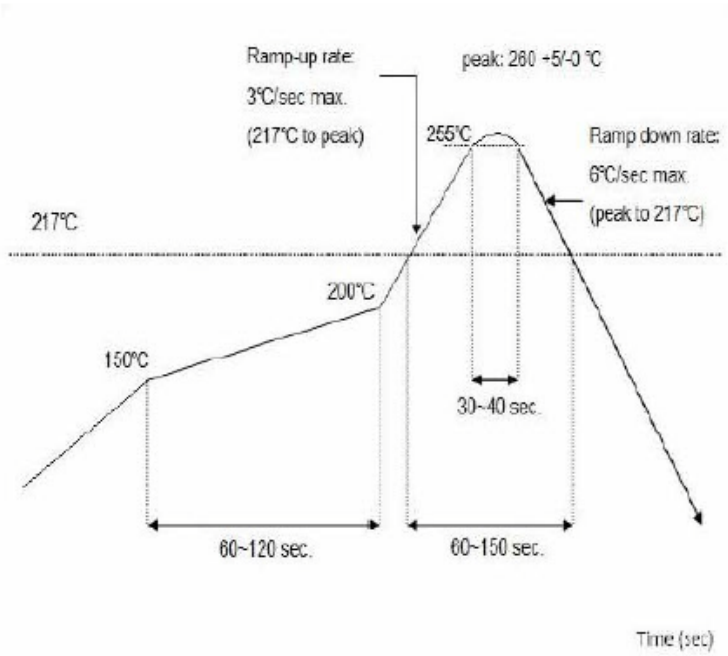

EOF

Federal Communication Commission Interference Statement

This equipment has been tested and found to comply with the limits for a Class B digital device, pursuant to Part 15 of the FCC Rules. These limits are designed to provide reasonable protection against harmful interference in a residential installation.

This equipment generates, uses and can radiate radio frequency energy and, if not installed and used in accordance with the instructions, may cause harmful interference to radio communications. However, there is no guarantee that interference will not occur in a particular installation. If this equipment does cause harmful interference to radio or television reception, which can be determined by turning the equipment off and on, the user is encouraged to try to correct the interference by one of the following measures:

. Reorient or relocate the receiving antenna.

. Increase the separation between the equipment and receiver.

. Connect the equipment into an outlet on a circuit different from that to which the receiver is connected.

. Consult the dealer or an experienced radio/TV technician for help.

FCC Caution: To assure continued compliance, any changes or modifications not expressly approved by the party responsible for compliance could void the user's authority to operate this equipment. (Example - use only shielded interface cables when connecting to computer or peripheral devices).

End Product Labeling

This transmitter module is authorized only for use in devices where the antenna may be installed such that 0.5 cm may be maintained between the antenna and users. The final end product must be labeled in visible area with the following: “Contains FCC ID:2AHVLCSAPPONEDYACO“

”

End Product Manual Information

The user manual for end users must include the following information in a prominent location “IMPORTANT NOTE: To comply with FCC RF exposure compliance requirements, the antenna used for this transmitter must be installed to provide a separation distance of at least 0.5cm from all persons and must not be colocated or operating in conjunction with any other antenna or transmitter.” This device complies with part 15 of the FCC rules.
Operation is subject to the following two conditions (1) This device may not cause harmful interference and (2) This device must accept any interference received, including interference that may cause undesired operation.
IMPORTANT NOTE: In the event that these conditions can not be met (for example certain laptop configurations or colocation with another transmitter), then the FCC authorization is no longer considered valid and the FCC ID can not be used on the final product. In these circumstances, the OEM integrator will be responsible for reevaluating the end product (including the transmitter) and obtaining a separate FCC authorization. This device is intended only for OEM integrators under the following conditions: The antenna must be installed such that 0.5 cm is maintained between the antenna and users. As long as a condition above is met, further transmitter test will not be required. However, the OEM integrator is still responsible for testing their end product for any additional compliance requirements required with this module installed (for example, digital device emissions, PC peripheral requirements, etc.).