PSA-ESCI 2016.03.11
EmiR5 2016.03.11

NVLAP Lab Code

ABSOLUTE GAIN

Work Order:	OFIX0008	**Date:**	04/15/16		
Project:	None	**Temperature:**	20.1 °C		
Job Site:	TX02	**Humidity:**	49.8% RH		
Serial Number:	None	**Barometric Pres.:**	1017 mbar	**Tested by:**	Jonathan Kiefer
EUT:	Trace Antenna				
Configuration:	1				
Customer:	Orthofix				
Attendees:	Bobby Harris				
EUT Power:	Battery				
Operating Mode:	Typical Operating Mode				
Deviations:	None				
Comments:	Antenna height maxed. EUT ~ 1.5m high				

Frequency	**2442**	Absolute Gain of Reference Antenna (dBi)	10.17
Measurement Antenna Polarity	**Vertical**	Reference Antenna Relative Gain Max (dBuV/m)	93.02
Antenna Under Test (AUT) Polarity	**Y**	AUT Relative Gain Max (dBuV/m)	78.02
Maximum Absolute Gain of AUT (dBi)	**-3.86**	Difference (Reference Antenna - AUT) (dB)	15.00
Minimum Absolute Gain of AUT (dBi)	-10.36	AUT Setup Loss (dB)	**0.97**
Delta (dB)	6.50	Correction Factor (Convert Relative to Absolute Gain) (dB)	**81.88**
Average Absolute Gain of AUT (dBi)	**-5.85**		

Run #		**Test Distance (m)**	3m	**Antenna Height(s)**		**Results**	NA

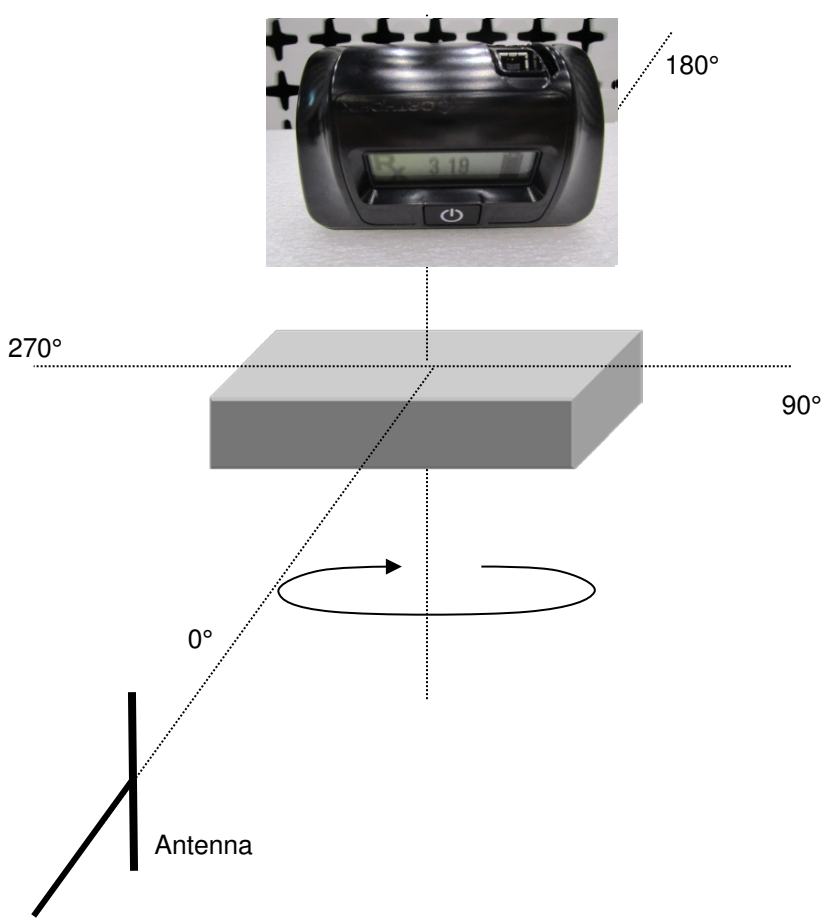

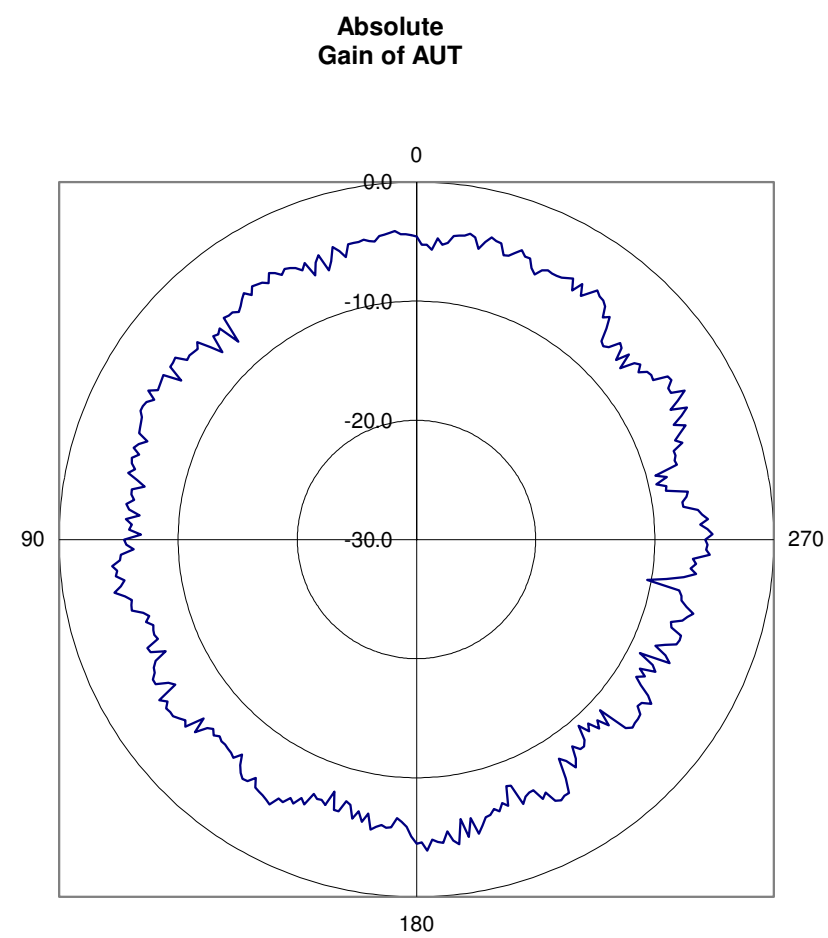

NORTHWEST EMC

ABSOLUTE GAIN

PSA-ESO 2016.03.11
EmRX 2016.03.11

NVLAP Lab Code

Work Order:	OFIX0008	**Date:**	04/15/16		
Project:	None	**Temperature:**	20.1 °C		
Job Site:	TX02	**Humidity:**	49.8% RH		
Serial Number:	None	**Barometric Pres.:**	1017 mbar	**Tested by:**	Jonathan Kiefer
EUT:	Trace Antenna				
Configuration:	1				
Customer:	Orthofix				
Attendees:	Bobby Harris				
EUT Power:	Battery				
Operating Mode:	Typical Operating Mode				
Deviations:	None				
Comments:	EUT ~ 1.5m high				

Frequency	**2442**	Absolute Gain of Reference Antenna (dBi)	10.17
Measurement Antenna Polarity	**Horizontal**	Reference Antenna Relative Gain Max (dBuV/m)	94.52
Antenna Under Test (AUT) Polarity	**Z**	AUT Relative Gain Max (dBuV/m)	74.22
Maximum Absolute Gain of AUT (dBi)	**-9.16**	Difference (Reference Antenna - AUT) (dB)	20.30
Minimum Absolute Gain of AUT (dBi)	-30.46	AUT Setup Loss (dB)	**0.97**
Delta (dB)	21.30	Correction Factor (Convert Relative to Absolute Gain) (dB)	**83.38**
Average Absolute Gain of AUT (dBi)	**-16.08**		

Run #	Test Distance (m)	3m	Antenna Height(s)		Results	NA

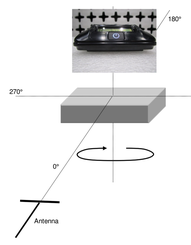

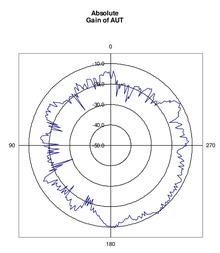

NWSE Designations
0
270
180
90

Table Azimuth (Degrees)	AUT Relative Gain (dBuV/m)	AUT Absolute Gain (dBi)	Comments
359.0	66.0	-17.4	
358.0	66.5	-16.9	
357.0	69.6	-13.8	
356.0	68.4	-15.0	
355.0	66.8	-16.6	
354.0	63.4	-20.0	
353.0	65.5	-17.9	
352.0	57.4	-26.0	
351.0	63.9	-19.5	
350.0	61.4	-22.0	
349.0	64.0	-19.4	
348.0	63.6	-19.8	
347.0	64.2	-19.2	
346.0	64.3	-19.1	
345.0	62.4	-21.0	
344.0	59.5	-23.9	
343.0	63.9	-19.5	
342.0	64.0	-19.4	
341.0	61.2	-22.2	
340.0	55.8	-27.6	
339.0	58.9	-24.5	
338.0	57.8	-25.6	
337.0	64.6	-18.8	
336.0	64.6	-18.8	
335.0	65.0	-18.4	
334.0	64.9	-18.5	
333.0	65.2	-18.2	
332.0	63.9	-19.5	
331.0	64.9	-18.5	
330.0	64.1	-19.3	
329.0	60.9	-22.5	
328.0	64.4	-19.0	
327.0	65.0	-18.4	
326.0	66.6	-16.8	
325.0	67.0	-16.4	
324.0	66.8	-16.6	
323.0	67.5	-15.9	
322.0	66.7	-16.7	
321.0	63.4	-20.0	
320.0	60.3	-23.1	
319.0	66.5	-16.9	
318.0	66.3	-17.1	
317.0	64.6	-18.8	
316.0	64.2	-19.2	
315.0	61.8	-21.6	
314.0	63.8	-19.6	
313.0	64.5	-18.9	
312.0	64.6	-18.8	
311.0	62.6	-20.8	
310.0	65.3	-18.1	
309.0	65.3	-18.1	
308.0	67.7	-15.7	
307.0	67.9	-15.5	
306.0	69.9	-13.5	
305.0	69.1	-14.3	
304.0	71.6	-11.8	
303.0	71.7	-11.7	
302.0	72.2	-11.2	
301.0	72.3	-11.1	
300.0	72.9	-10.5	
299.0	72.3	-11.1	
298.0	71.3	-12.1	
297.0	72.0	-11.4	
296.0	71.4	-12.0	
295.0	70.2	-13.2	
294.0	70.3	-13.1	
293.0	69.6	-13.8	
292.0	69.8	-13.6	
291.0	67.7	-15.7	
290.0	64.2	-19.2	
289.0	66.5	-16.9	
288.0	68.1	-15.3	
287.0	68.1	-15.3	
286.0	69.2	-14.2	
285.0	69.7	-13.7	
284.0	66.3	-17.1	
283.0	67.3	-16.1	
282.0	69.4	-14.0	
281.0	69.8	-13.6	
280.0	69.5	-13.9	
279.0	69.3	-14.1	
278.0	69.5	-13.9	
277.0	69.8	-13.6	
276.0	67.7	-15.7	
275.0	70.6	-12.8	
274.0	71.0	-12.4	
273.0	70.7	-12.7	
272.0	71.6	-11.8	
271.0	71.1	-12.3	
270.0	69.9	-13.5	
269.0	70.7	-12.7	
268.0	69.4	-14.0	
267.0	68.8	-14.6	
266.0	67.4	-16.0	
265.0	66.8	-16.6	
264.0	66.3	-17.1	
263.0	66.0	-17.4	
262.0	66.6	-16.8	
261.0	68.3	-15.1	
260.0	68.4	-15.0	
259.0	66.8	-16.6	
258.0	69.0	-14.4	
257.0	70.1	-13.3	
256.0	69.1	-14.3	
255.0	68.3	-15.1	
254.0	70.4	-13.0	
253.0	70.7	-12.7	
252.0	68.1	-15.3	
251.0	71.0	-12.4	
250.0	70.1	-13.3	
249.0	70.5	-12.9	
248.0	70.4	-13.0	
247.0	71.0	-12.4	
246.0	70.8	-12.6	
245.0	69.1	-14.3	
244.0	70.8	-12.6	
243.0	72.0	-11.4	
242.0	72.0	-11.4	
241.0	71.8	-11.6	
240.0	71.0	-12.4	
239.0	70.9	-12.5	
238.0	70.1	-13.3	
237.0	72.0	-11.4	
236.0	70.4	-13.0	
235.0	72.2	-11.2	
234.0	71.1	-12.3	
233.0	71.6	-11.8	
232.0	71.5	-11.9	
231.0	70.3	-13.1	
230.0	72.0	-11.4	
229.0	72.2	-11.2	
228.0	70.5	-12.9	
227.0	72.6	-10.8	
226.0	72.8	-10.6	
225.0	72.3	-11.1	
224.0	73.0	-10.4	
223.0	71.8	-11.6	
222.0	73.1	-10.3	
221.0	73.1	-10.3	
220.0	71.3	-12.1	
219.0	73.5	-9.9	
218.0	72.4	-11.0	
217.0	73.6	-9.8	
216.0	73.5	-9.9	
215.0	73.4	-10.0	
214.0	74.2	-9.2	
213.0	73.0	-10.4	
212.0	72.6	-10.8	
211.0	72.3	-11.1	
210.0	72.4	-11.0	
209.0	72.2	-11.2	
208.0	71.9	-11.5	
207.0	71.7	-11.7	
206.0	69.8	-13.6	
205.0	71.7	-11.7	
204.0	70.1	-13.3	
203.0	71.3	-12.1	
202.0	72.1	-11.3	
201.0	70.7	-12.7	
200.0	70.7	-12.7	
199.0	71.8	-11.6	
198.0	72.0	-11.4	
197.0	71.4	-12.0	
196.0	71.4	-12.0	
195.0	70.7	-12.7	
194.0	68.8	-14.6	
193.0	69.8	-13.6	
192.0	70.1	-13.3	
191.0	70.1	-13.3	
190.0	70.2	-13.2	
189.0	70.9	-12.5	
188.0	71.5	-11.9	
187.0	71.6	-11.8	
186.0	71.4	-12.0	
185.0	71.3	-12.1	
184.0	73.0	-10.4	
183.0	72.3	-11.1	
182.0	73.8	-9.6	
181.0	73.0	-10.4	
180.0	73.5	-9.9	
179.0	73.0	-10.4	
178.0	72.9	-10.5	
177.0	72.9	-10.5	
176.0	72.6	-10.8	
175.0	71.9	-11.5	
174.0	71.6	-11.8	
173.0	70.8	-12.6	
172.0	70.1	-13.3	
171.0	69.7	-13.7	
170.0	68.3	-15.1	
169.0	68.5	-14.9	
168.0	68.2	-15.2	
167.0	67.2	-16.2	
166.0	66.1	-17.3	
165.0	67.2	-16.2	
164.0	65.0	-18.4	
163.0	66.3	-17.1	
162.0	66.4	-17.0	
161.0	60.9	-22.5	
160.0	64.0	-19.4	
159.0	61.8	-21.6	
158.0	65.3	-18.1	
157.0	60.9	-22.5	
156.0	65.2	-18.2	
155.0	60.1	-23.3	
154.0	67.1	-16.3	
153.0	66.2	-17.2	
152.0	66.6	-16.8	
151.0	69.5	-13.9	
150.0	69.6	-13.8	
149.0	67.5	-15.9	
148.0	67.9	-15.5	
147.0	70.3	-13.1	
146.0	68.5	-14.9	
145.0	69.0	-14.4	
144.0	68.2	-15.2	
143.0	65.8	-17.6	
142.0	67.1	-16.3	
141.0	67.5	-15.9	
140.0	67.3	-16.1	
139.0	66.7	-16.7	
138.0	67.0	-16.4	
137.0	60.1	-23.3	
136.0	66.3	-17.1	
135.0	66.0	-17.4	
134.0	64.1	-19.3	
133.0	66.9	-16.5	
132.0	62.4	-21.0	
131.0	66.6	-16.8	
130.0	66.7	-16.7	
129.0	67.3	-16.1	
128.0	64.8	-18.6	
127.0	66.5	-16.9	
126.0	66.3	-17.1	
125.0	66.3	-17.1	
124.0	65.3	-18.1	
123.0	68.2	-15.2	
122.0	64.1	-19.3	
121.0	66.1	-17.3	
120.0	69.4	-14.0	
119.0	68.8	-14.6	
118.0	69.2	-14.2	
117.0	70.6	-12.8	
116.0	69.6	-13.8	
115.0	68.9	-14.5	
114.0	66.1	-17.3	
113.0	62.1	-21.3	
112.0	65.9	-17.5	
111.0	58.6	-24.8	
110.0	64.1	-19.3	
109.0	52.9	-30.5	
108.0	64.1	-19.3	
107.0	63.7	-19.7	
106.0	62.4	-21.0	
105.0	64.1	-19.3	
104.0	64.7	-18.7	
103.0	65.2	-18.2	
102.0	63.3	-20.1	
101.0	64.9	-18.5	
100.0	64.1	-19.3	
99.0	65.0	-18.4	
98.0	64.0	-19.4	
97.0	58.8	-24.6	

Factor = Sum of these			
Preamp	Transducer	Cable	Chamber

Date Series for Discreet points (Adjusted Values)					
Freq	Value	Freq	Value	Freq	Value
PK	PK	AV	AV	QP	QP

Data Series for Scans (Adjusted Values)					Raw Values									
Freq	Scan	Max	Value 1	Value 2	Value 1 Height 1	Value 1 Height 2	Value 1 Height 3	Value 1 Height 4	Value 1 Height 5	Value 2 Height 1	Value 2 Height 2	Value 2 Height 3	Value 2 Height 4	Value 2 Height 5

Specifications			
Distance			
Freq	PK	QP	AV

Specification	Method

Preamp	
Freq	Value

Cables	
Freq	Value

Transducer	
Freq	Value

| | | |

RELATIVE GAIN

Work Order:	OFIX0008	**Date:**	04/15/16		
Project:	None	**Temperature:**	20.1 °C		
Job Site:	TX02	**Humidity:**	49.8% RH		
Serial Number:	None	**Barometric Pres.:**	1017 mbar	**Tested by:**	Jonathan Kiefer
EUT:	Trace Antenna				
Configuration:	1				
Customer:	Orthofix				
Attendees:	Bobby Harris				
EUT Power:	Battery				
Operating Mode:	Typical Operating Mode				
Deviations:	None				
Comments:	None				

Frequency (MHz) **2442**

Measurement Antenna Polarity **Horizontal**
Antenna Under Test (AUT) Polarity **Y**

Maximum Amplitude (dBuV/m) **72.2246**
Azimuth at Maximum **347°**
Minimum Amplitude (dBuV/m) **53.8246**
Azimuth at Minimum **28°**

Run #	7	**Test Distance (m)**	3	**Antenna Height(s)**	2		

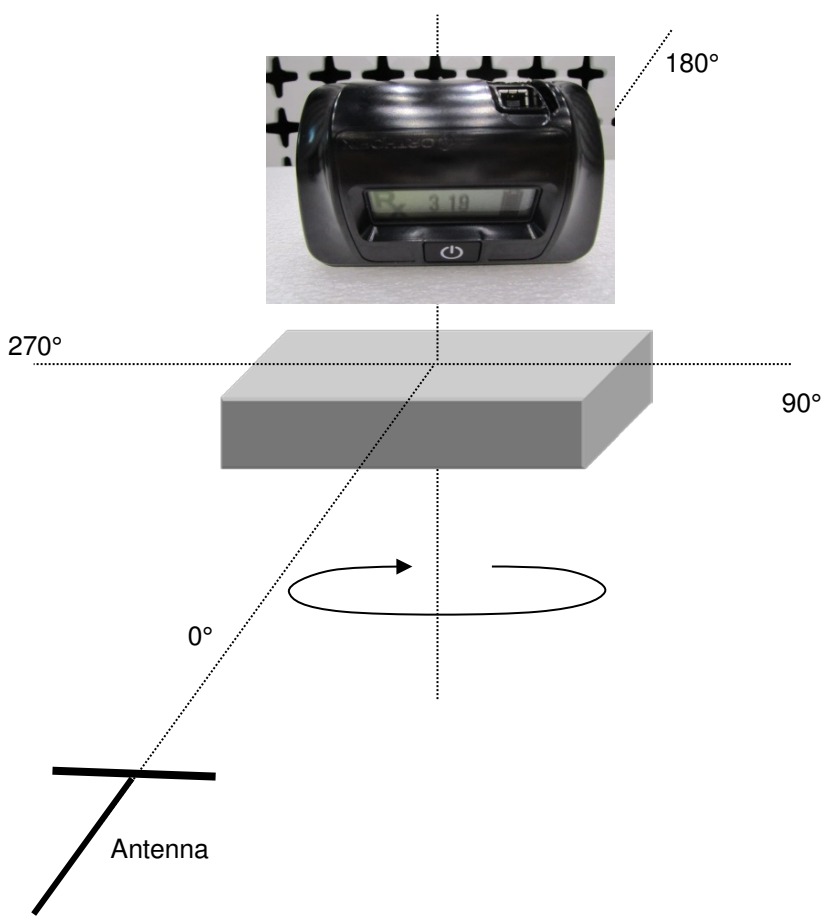

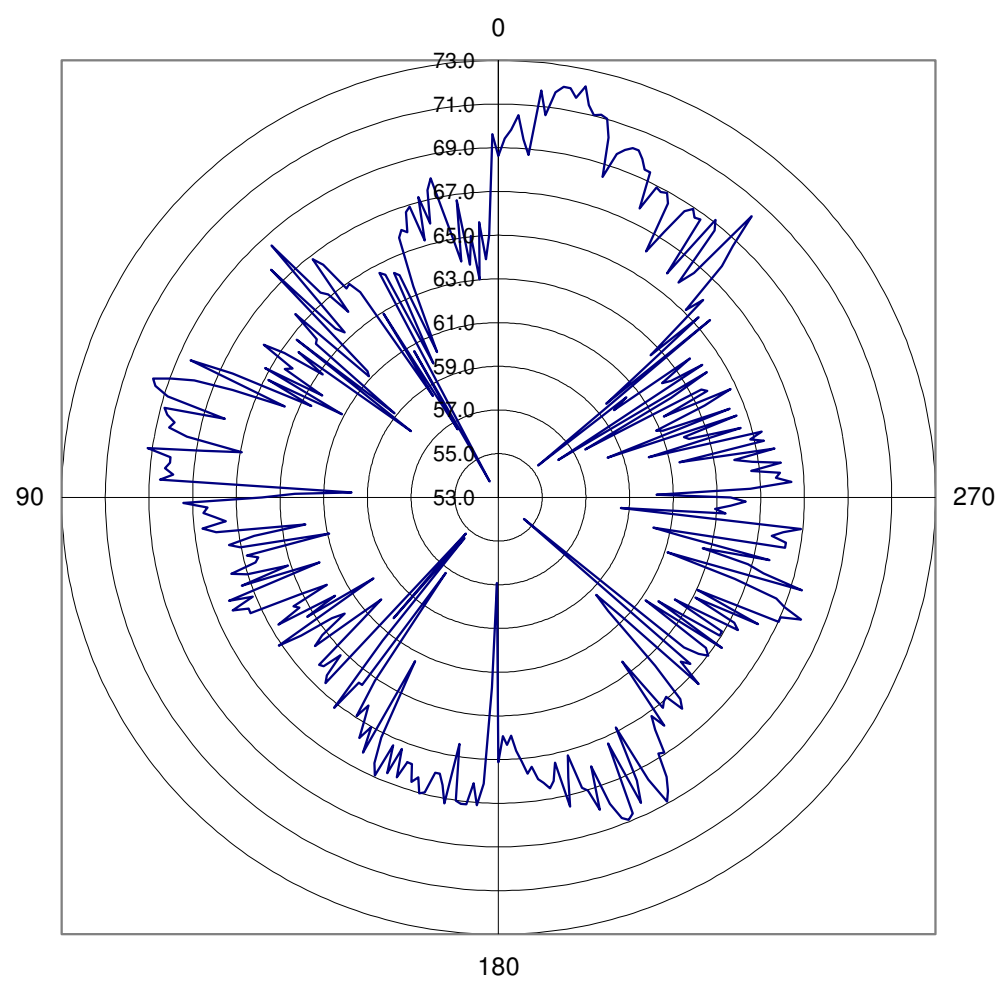

RELATIVE GAIN

Work Order:	OFIX0008	**Date:**	04/15/16		
Project:	None	**Temperature:**	20.1 °C		
Job Site:	TX02	**Humidity:**	49.8% RH		
Serial Number:	None	**Barometric Pres.:**	1017 mbar	**Tested by:**	Jonathan Kiefer
EUT:	Trace Antenna				
Configuration:	1				
Customer:	Orthofix				
Attendees:	Bobby Harris				
EUT Power:	Battery				
Operating Mode:	Typical Operating Mode				
Deviations:	None				
Comments:	None				

Frequency (MHz) **2442**

Measurement Antenna Polarity **Vertical**
Antenna Under Test (AUT) Polarity **Y**

Maximum Amplitude (dBuV/m) **77.5246**
Azimuth at Maximum **18°**
Minimum Amplitude (dBuV/m) **71.0246**
Azimuth at Minimum **75°**

Run #	8	**Test Distance (m)**	3	**Antenna Height(s)**	2		

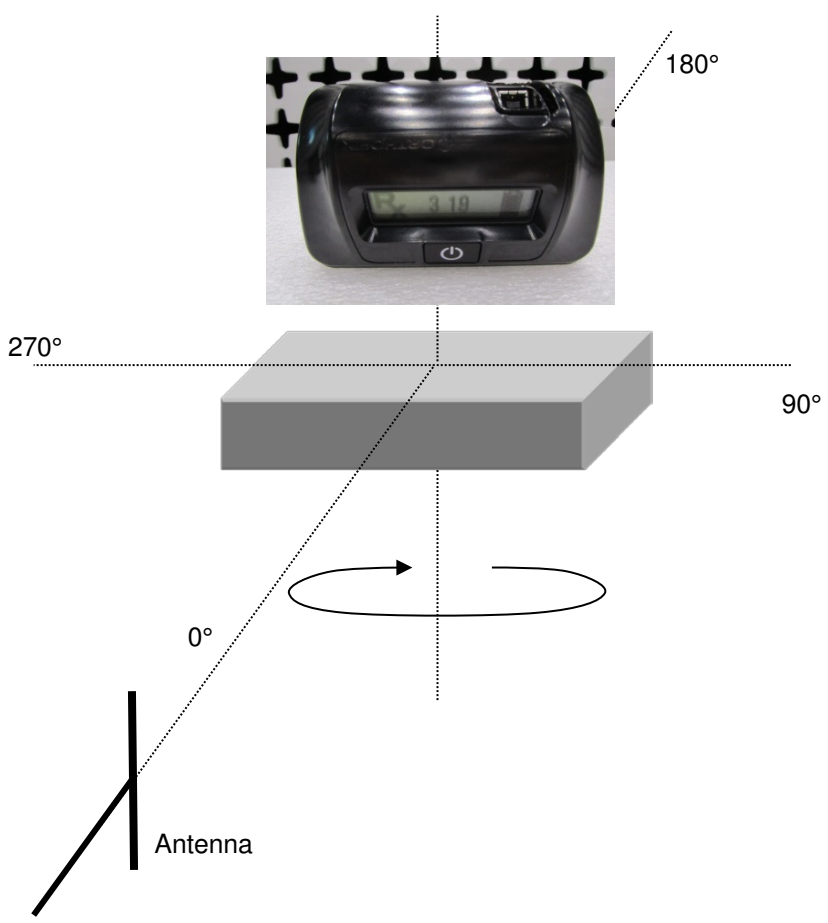

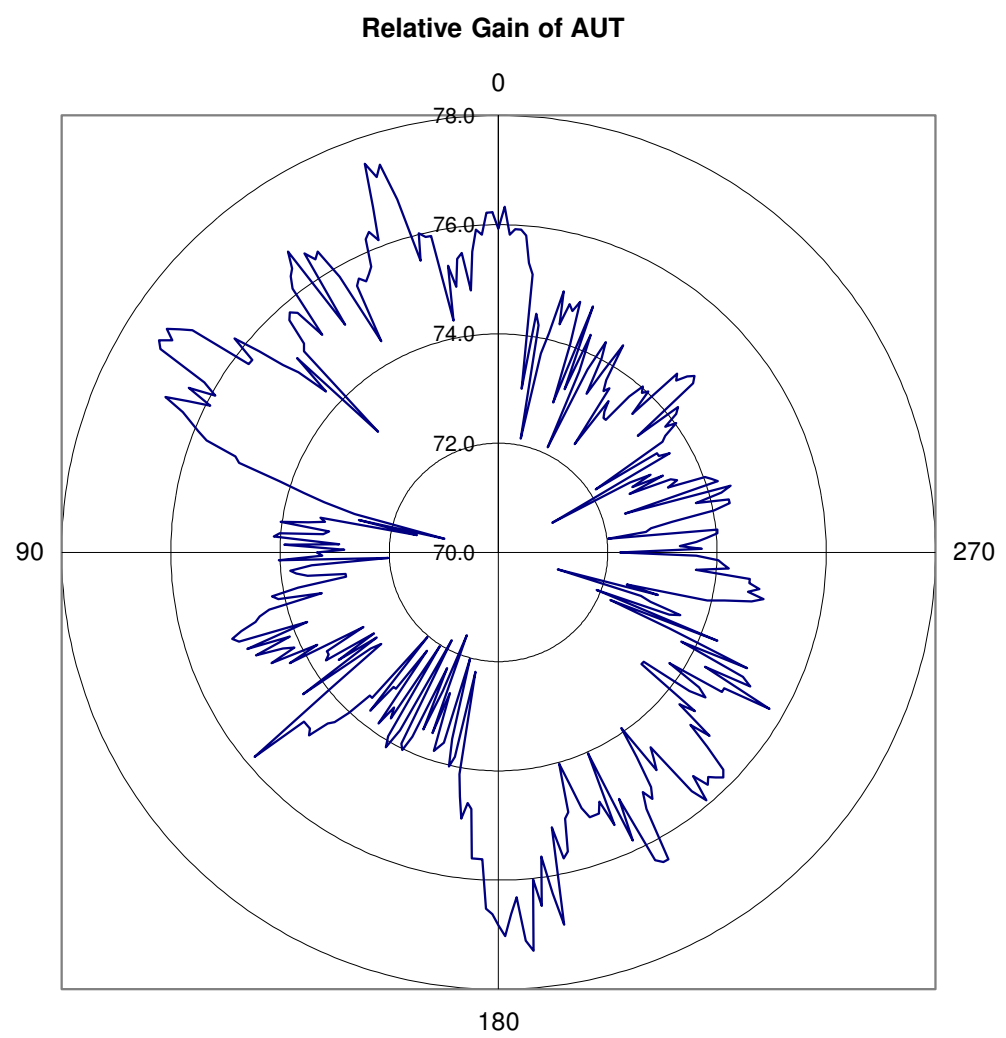

RELATIVE GAIN

Work Order:	OFIX0008	**Date:**	04/15/16		
Project:	None	**Temperature:**	20.1 °C		
Job Site:	TX02	**Humidity:**	49.8% RH		
Serial Number:	None	**Barometric Pres.:**	1017 mbar	**Tested by:**	Jonathan Kiefer
EUT:	Trace Antenna				
Configuration:	1				
Customer:	Orthofix				
Attendees:	Bobby Harris				
EUT Power:	Battery				
Operating Mode:	Typical Operating Mode				
Deviations:	None				
Comments:	None				

Frequency (MHz) **2442**

Measurement Antenna Polarity **Horizontal**
Antenna Under Test (AUT) Polarity **X**

Maximum Amplitude (dBuV/m) **72.8246**
Azimuth at Maximum **252°**
Minimum Amplitude (dBuV/m) **55.2246**
Azimuth at Minimum **67°**

Run #	9	**Test Distance (m)**	3	**Antenna Height(s)**	2		

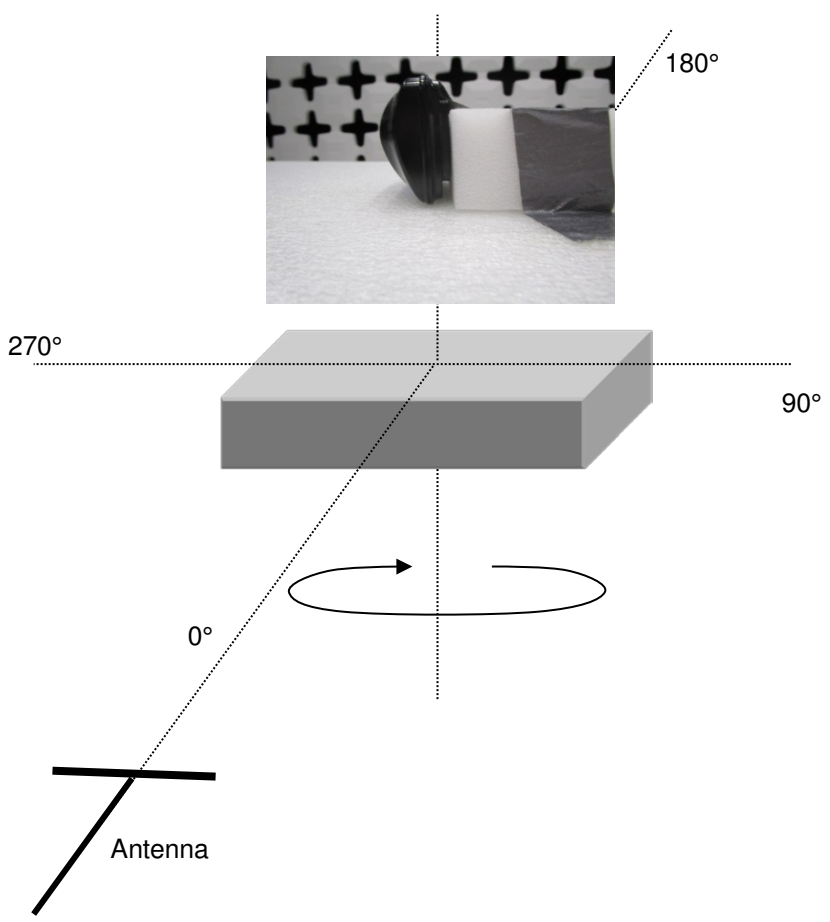

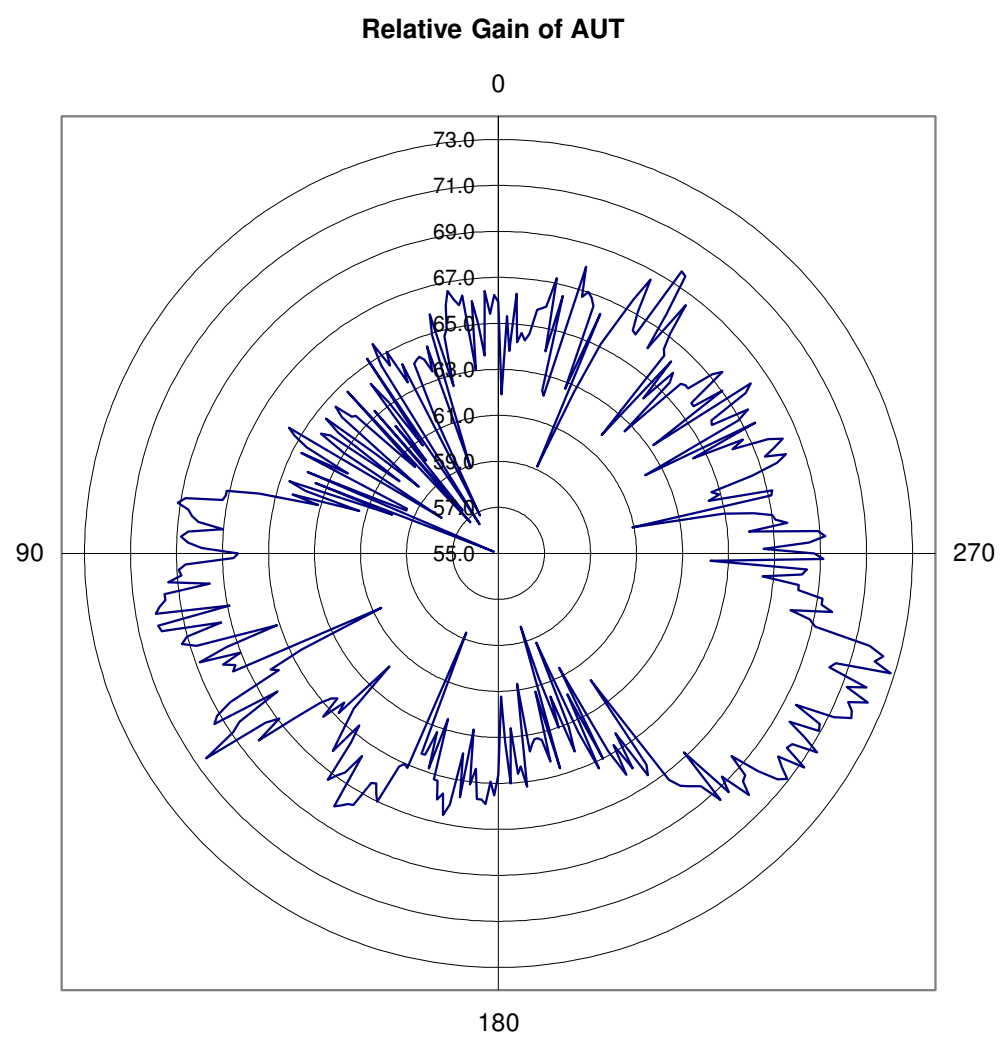

RELATIVE GAIN

Work Order:	OFIX0008	**Date:**	04/15/16		
Project:	None	**Temperature:**	20.1 °C		
Job Site:	TX02	**Humidity:**	49.8% RH		
Serial Number:	None	**Barometric Pres.:**	1017 mbar	**Tested by:**	Jonathan Kiefer
EUT:	Trace Antenna				
Configuration:	1				
Customer:	Orthofix				
Attendees:	Bobby Harris				
EUT Power:	Battery				
Operating Mode:	Typical Operating Mode				
Deviations:	None				
Comments:	None				

Frequency (MHz) **2442**

Measurement Antenna Polarity **Vertical**
Antenna Under Test (AUT) Polarity **X**

Maximum Amplitude (dBuV/m) **77.0246**
Azimuth at Maximum **243°**
Minimum Amplitude (dBuV/m) **69.9246**
Azimuth at Minimum **230°**

Run #	10	**Test Distance (m)**	3	**Antenna Height(s)**	2		

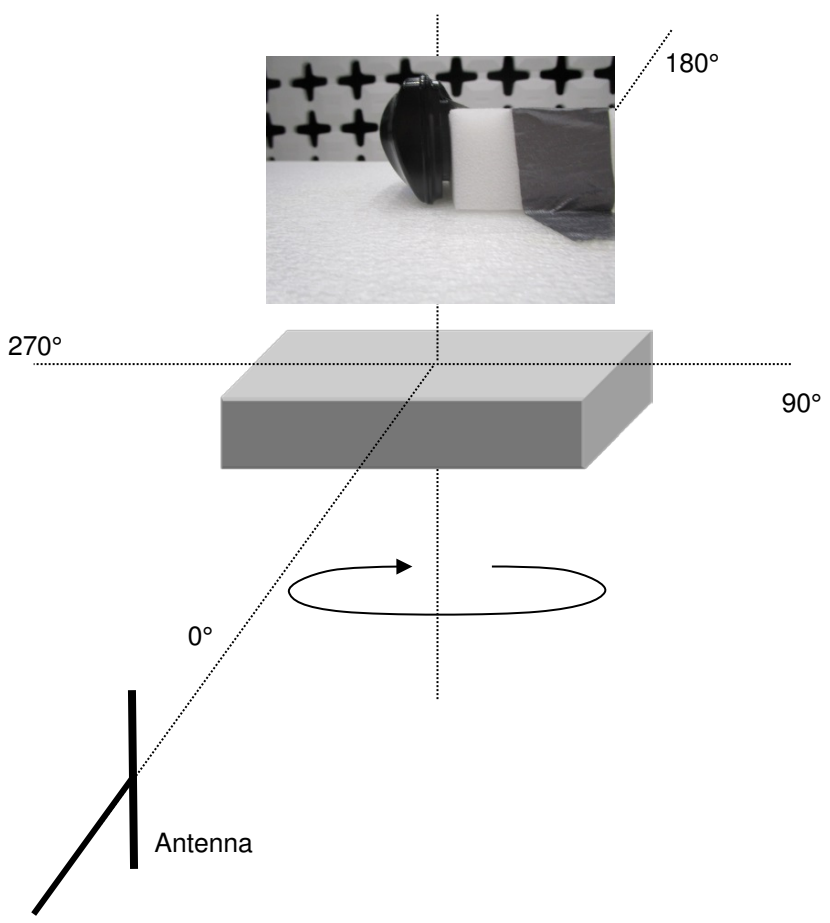

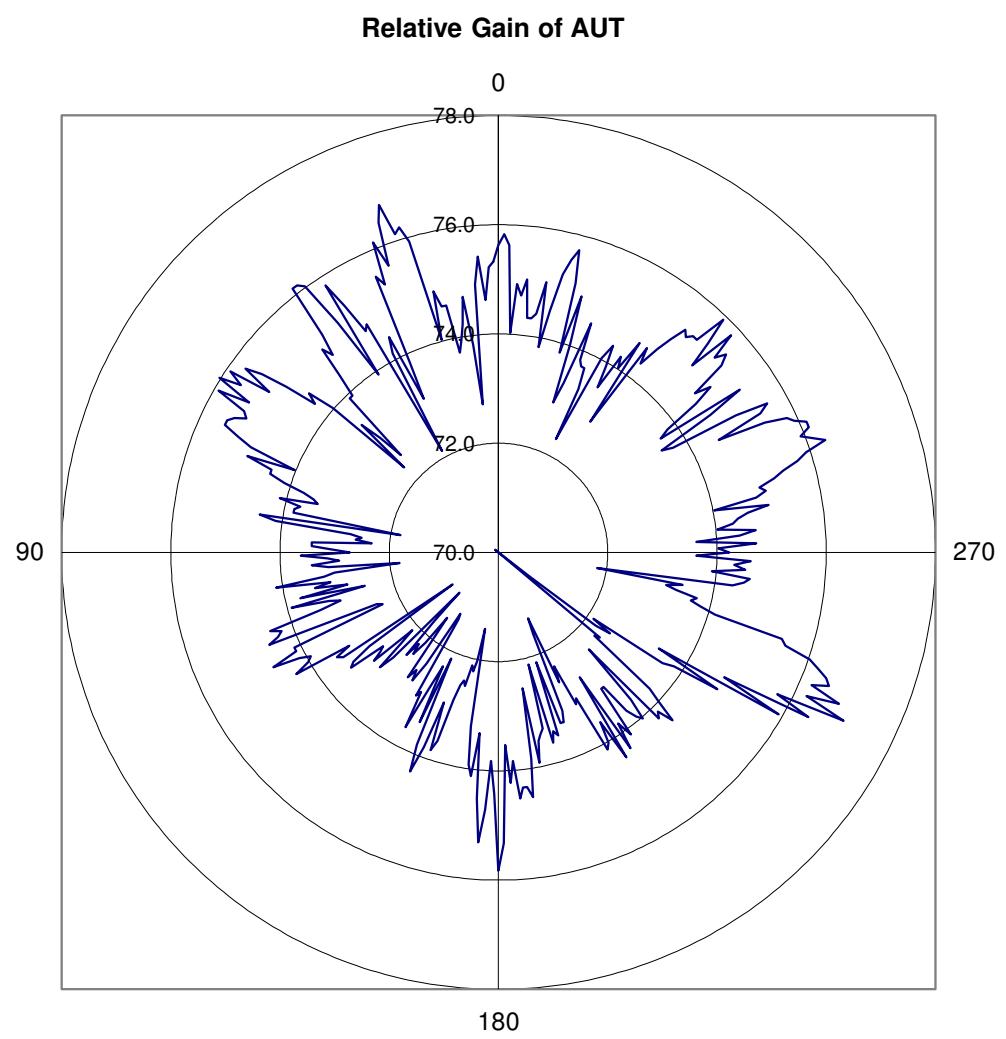

RELATIVE GAIN

Work Order:	OFIX0008	**Date:**	04/15/16		
Project:	None	**Temperature:**	20.1 °C		
Job Site:	TX02	**Humidity:**	49.8% RH		
Serial Number:	None	**Barometric Pres.:**	1017 mbar	**Tested by:**	Jonathan Kiefer
EUT:	Trace Antenna				
Configuration:	1				
Customer:	Orthofix				
Attendees:	Bobby Harris				
EUT Power:	Battery				
Operating Mode:	Typical Operating Mode				
Deviations:	None				
Comments:	None				

Frequency (MHz) **2442**

Measurement Antenna Polarity **Horizontal**
Antenna Under Test (AUT) Polarity **Z**

Maximum Amplitude (dBuV/m) **74.2246**
Azimuth at Maximum **214°**
Minimum Amplitude (dBuV/m) **52.9246**
Azimuth at Minimum **109°**

Run #	11	**Test Distance (m)**	3	**Antenna Height(s)**	2		

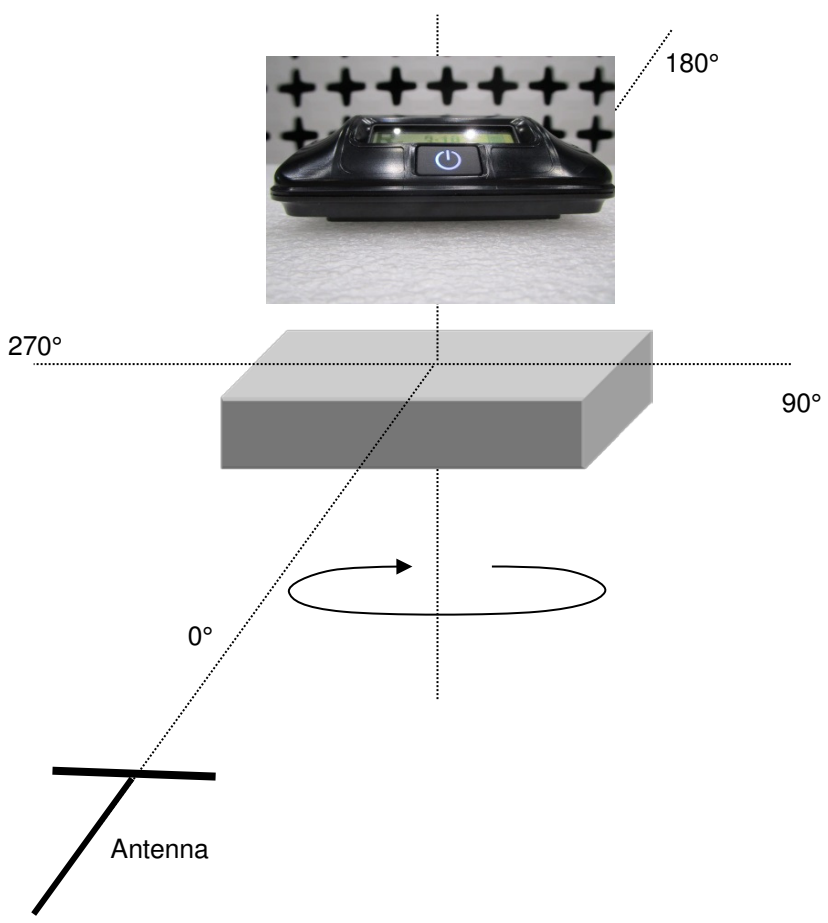

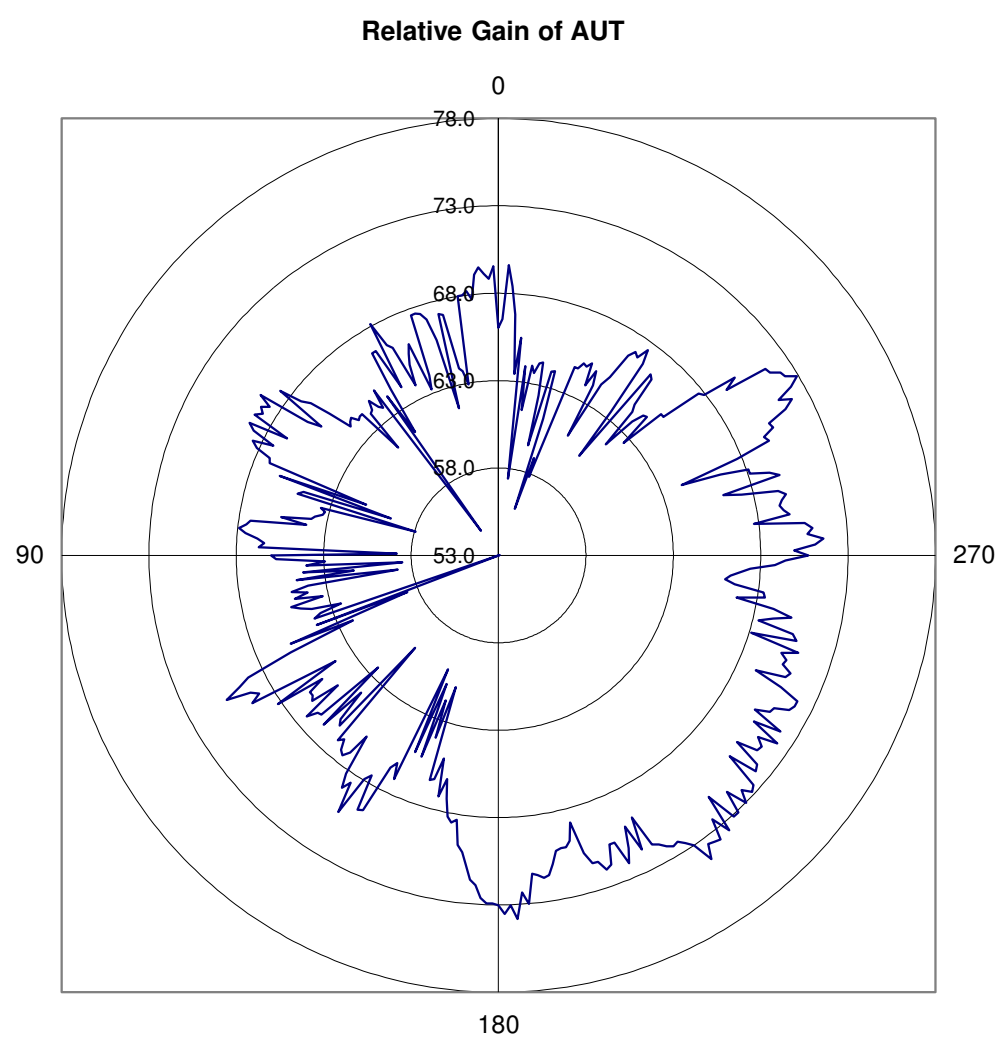

RELATIVE GAIN

Work Order:	OFIX0008	**Date:**	04/15/16		
Project:	None	**Temperature:**	20.1 °C		
Job Site:	TX02	**Humidity:**	49.8% RH		
Serial Number:	None	**Barometric Pres.:**	1017 mbar	**Tested by:**	Jonathan Kiefer
EUT:	Trace Antenna				
Configuration:	1				
Customer:	Orthofix				
Attendees:	Bobby Harris				
EUT Power:	Battery				
Operating Mode:	Typical Operating Mode				
Deviations:	None				
Comments:	None				

Frequency (MHz) **2442**

Measurement Antenna Polarity **Vertical**
Antenna Under Test (AUT) Polarity **Z**

Maximum Amplitude (dBuV/m) **71.1246**
Azimuth at Maximum **344°**
Minimum Amplitude (dBuV/m) **52.5246**
Azimuth at Minimum **158°**

Run #	12	**Test Distance (m)**	3	**Antenna Height(s)**	2		

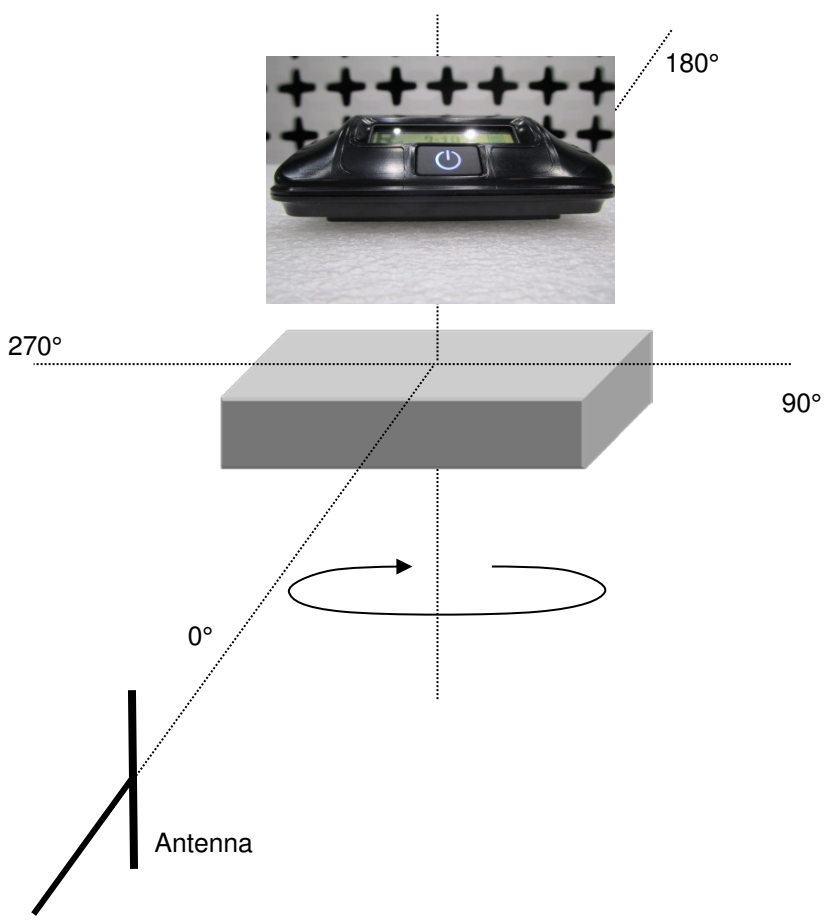

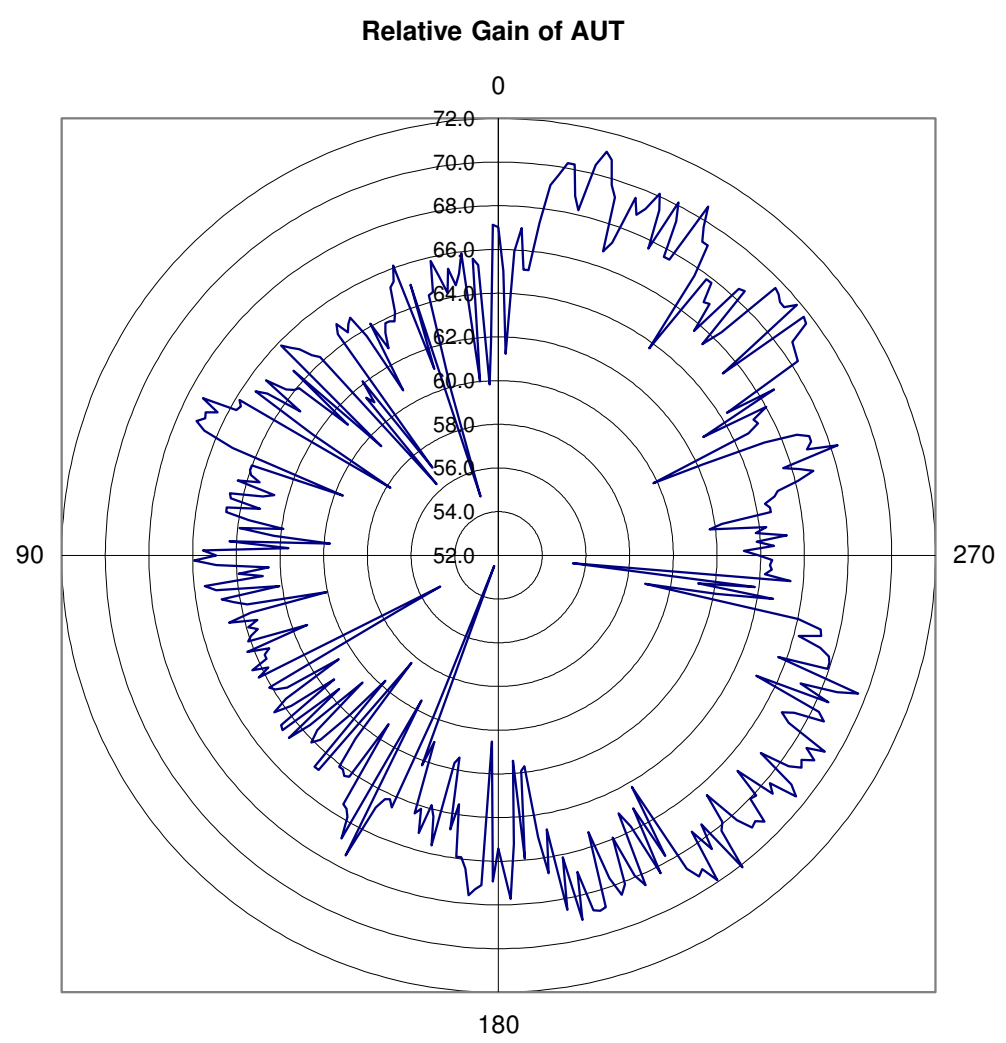

RELATIVE GAIN

Work Order:	OFIX0008	**Date:**	04/15/16		
Project:	None	**Temperature:**	20.1 °C		
Job Site:	TX02	**Humidity:**	49.8% RH		
Serial Number:	None	**Barometric Pres.:**	1017 mbar	**Tested by:**	Jonathan Kiefer
EUT:	Trace Antenna				
Configuration:	1				
Customer:	Orthofix				
Attendees:	Bobby Harris				
EUT Power:	Battery				
Operating Mode:	Typical Operating Mode				
Deviations:	None				
Comments:	Antenna height maxed.				

Frequency (MHz) **2442**

Measurement Antenna Polarity **Horizontal**
Antenna Under Test (AUT) Polarity **Y**

Maximum Amplitude (dBuV/m) **73.6246**
Azimuth at Maximum **202°**
Minimum Amplitude (dBuV/m) **52.4246**
Azimuth at Minimum **20°**

Run #	13	**Test Distance (m)**	3	**Antenna Height(s)**	3.455		

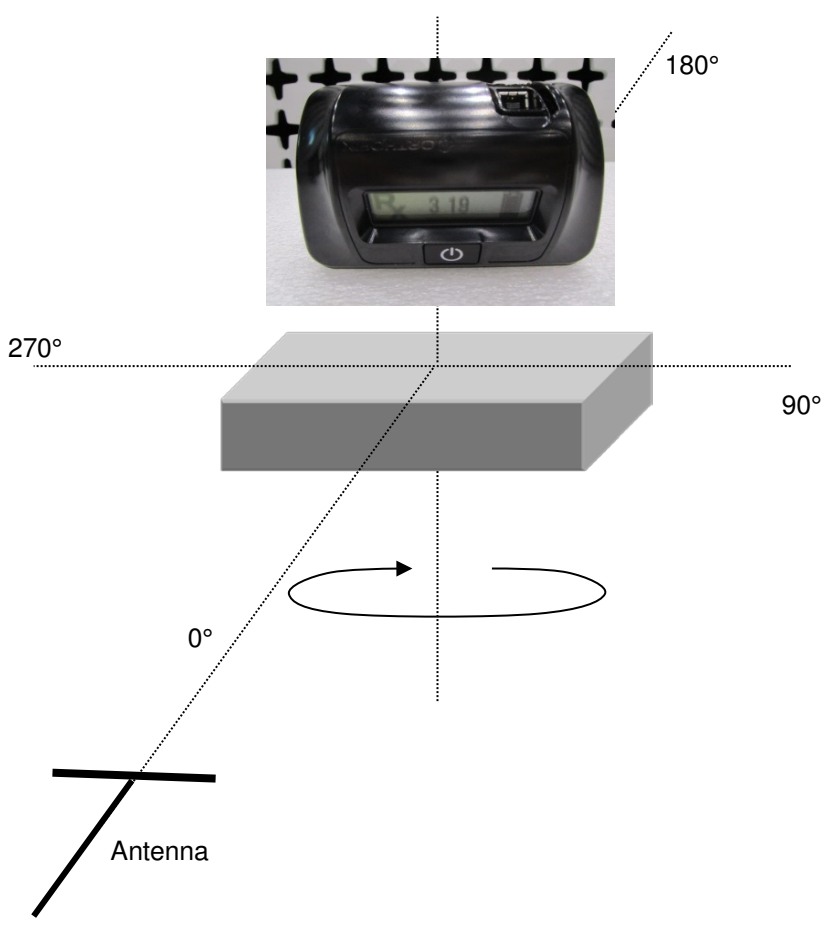

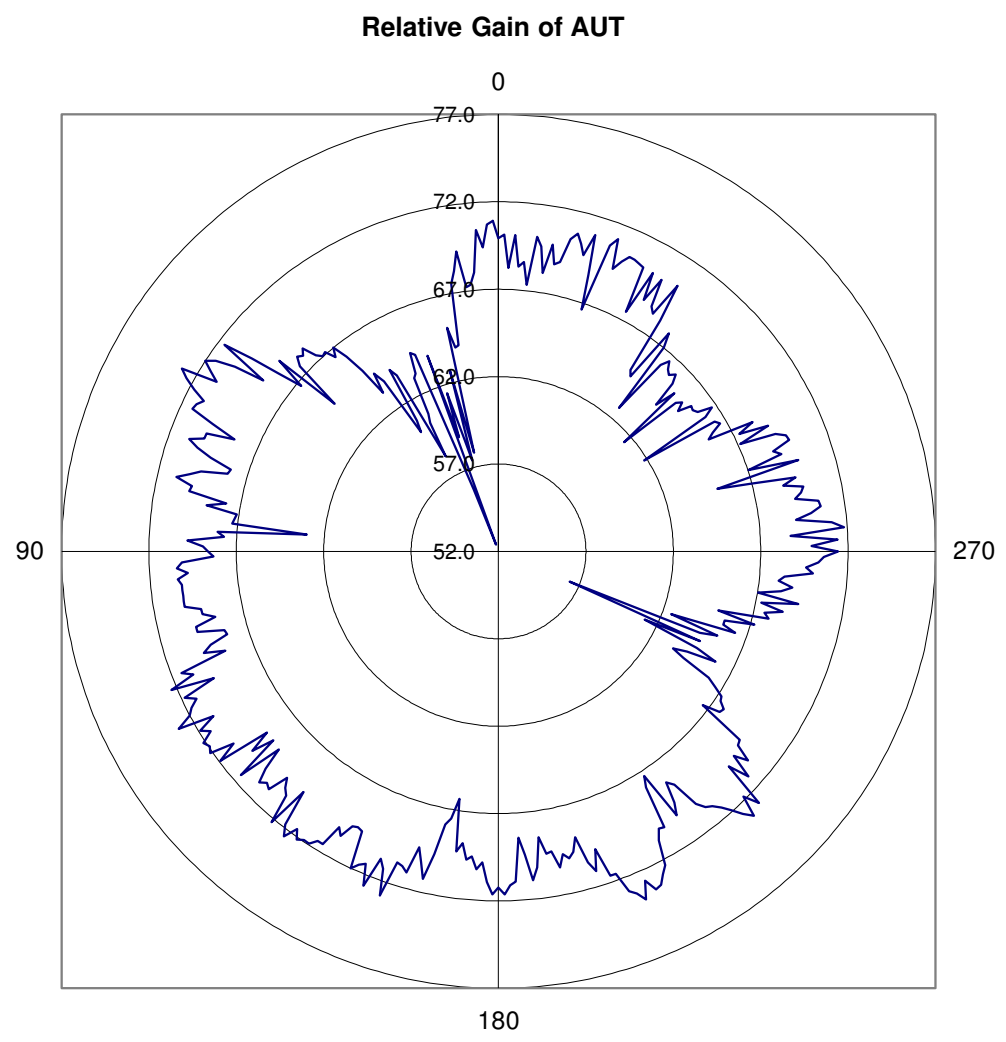

RELATIVE GAIN

Work Order:	OFIX0008	**Date:**	04/15/16		
Project:	None	**Temperature:**	20.1 °C		
Job Site:	TX02	**Humidity:**	49.8% RH		
Serial Number:	None	**Barometric Pres.:**	1017 mbar	**Tested by:**	Jonathan Kiefer
EUT:	Trace Antenna				
Configuration:	1				
Customer:	Orthofix				
Attendees:	Bobby Harris				
EUT Power:	Battery				
Operating Mode:	Typical Operating Mode				
Deviations:	None				
Comments:	Antenna height maxed.				

Frequency (MHz) **2442**

Measurement Antenna Polarity **Vertical**
Antenna Under Test (AUT) Polarity **Y**

Maximum Amplitude (dBuV/m) **78.0246**
Azimuth at Maximum **345°**
Minimum Amplitude (dBuV/m) **71.5246**
Azimuth at Minimum **259°**

Run #	14	**Test Distance (m)**	3	**Antenna Height(s)**	3.455		

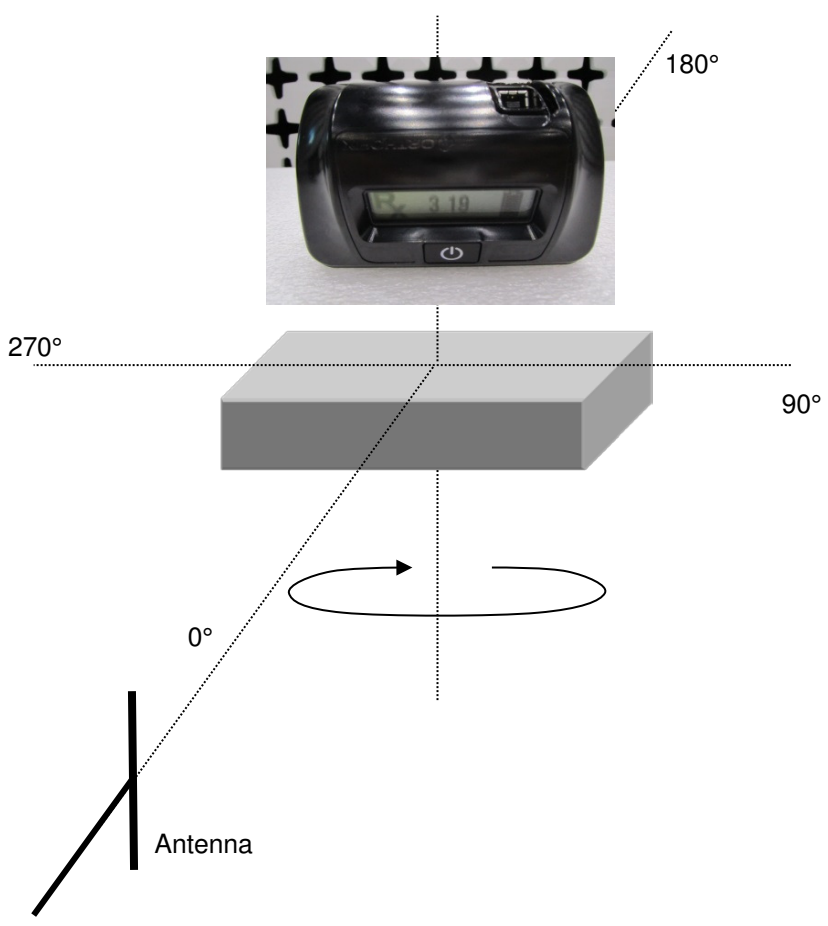

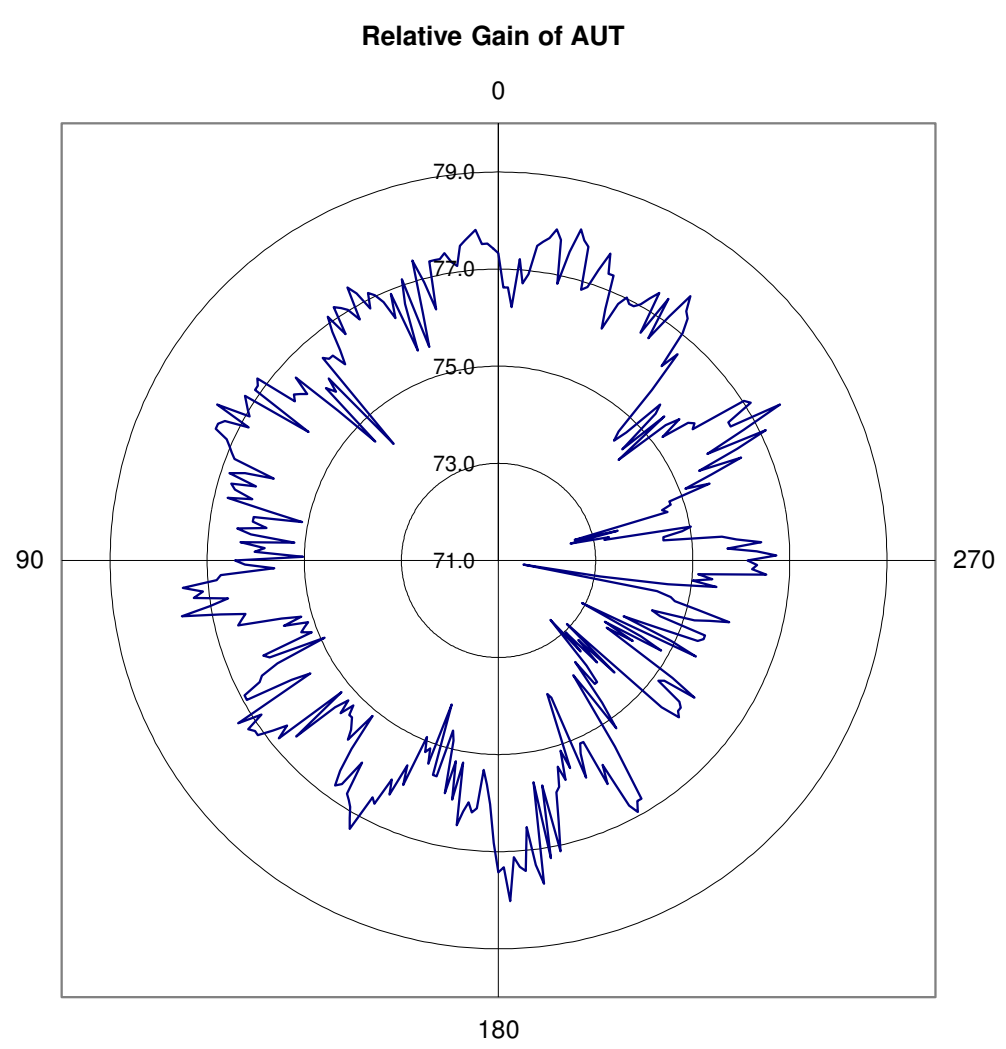

RELATIVE GAIN

Work Order:	OFIX0008	**Date:**	04/15/16		
Project:	None	**Temperature:**	20.1 °C		
Job Site:	TX02	**Humidity:**	49.8% RH		
Serial Number:	None	**Barometric Pres.:**	1017 mbar	**Tested by:**	Jonathan Kiefer
EUT:	Trace Antenna				
Configuration:	2				
Customer:	Orthofix				
Attendees:	Bobby Harris				
EUT Power:	Battery				
Operating Mode:	Typical Operating Mode				
Deviations:	None				
Comments:	Reference antenna.				

Frequency (MHz) **2442**

Measurement Antenna Polarity **Vertical**
Antenna Under Test (AUT) Polarity **Y**

Maximum Amplitude (dBuV/m) **93.0246**
Azimuth at Maximum **29°**
Minimum Amplitude (dBuV/m) **64.6246**
Azimuth at Minimum **268°**

Run #	15	**Test Distance (m)**	3	**Antenna Height(s)**	2.213		

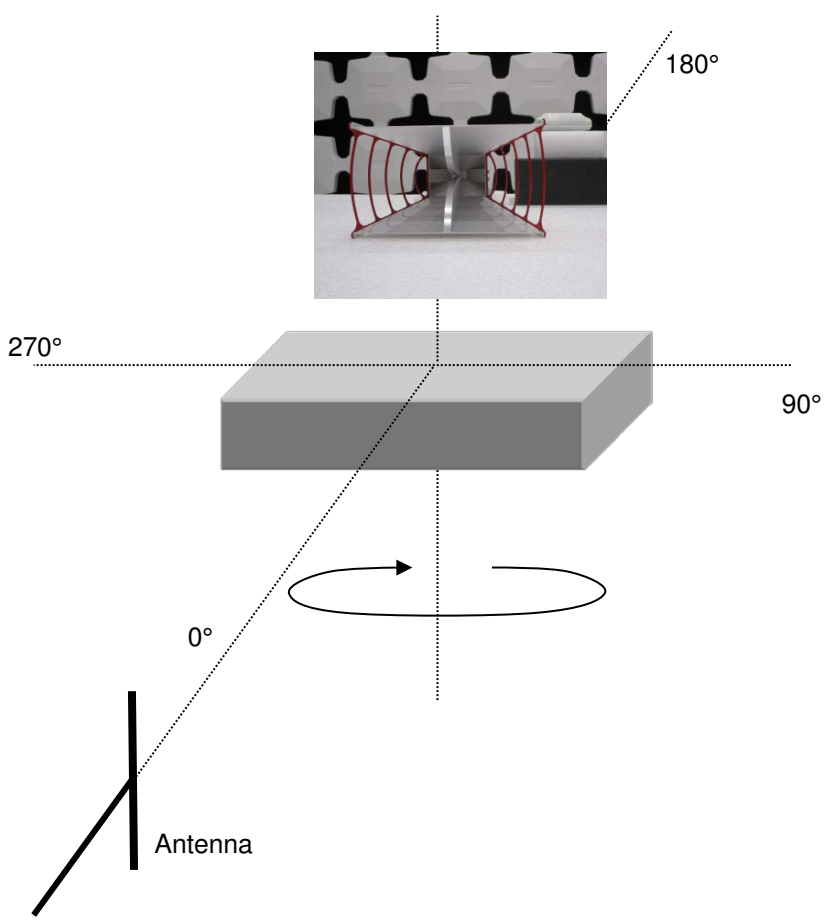

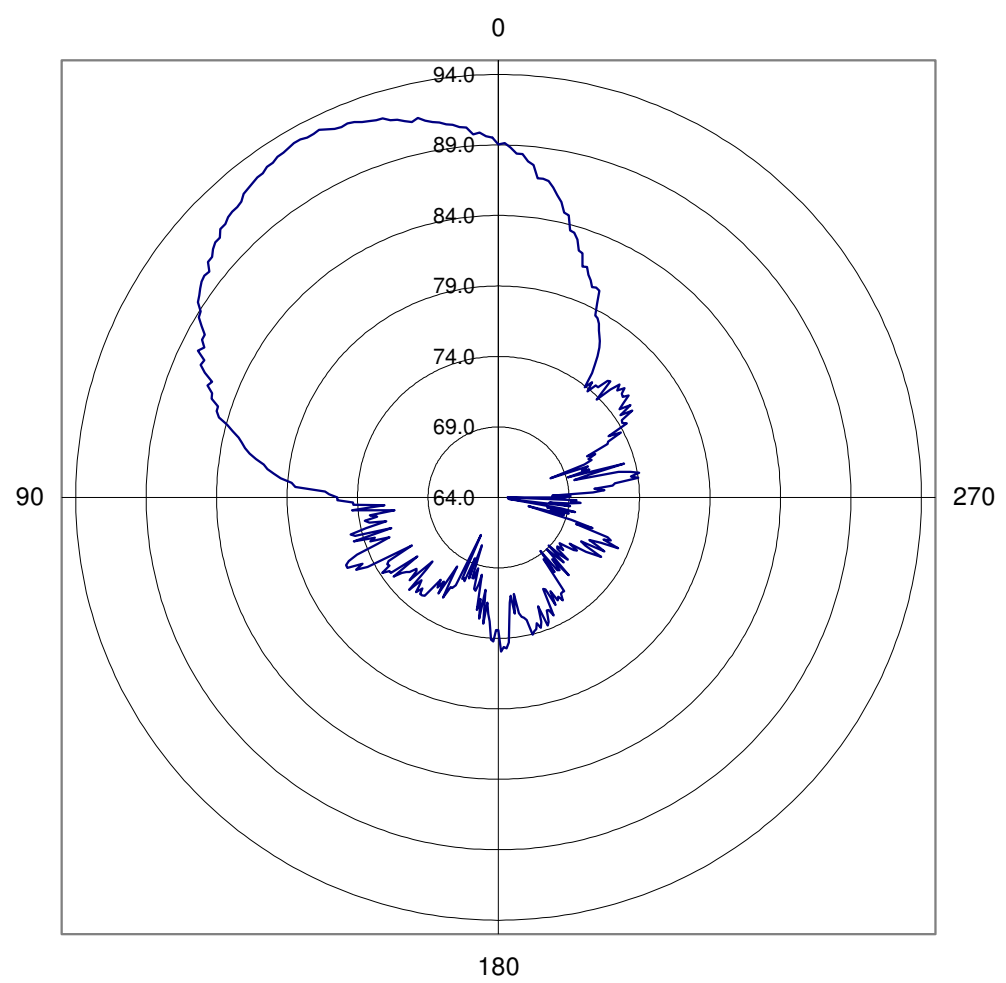

RELATIVE GAIN

Work Order:	OFIX0008	**Date:**	04/15/16		
Project:	None	**Temperature:**	20.1 °C		
Job Site:	TX02	**Humidity:**	49.8% RH		
Serial Number:	None	**Barometric Pres.:**	1017 mbar	**Tested by:**	Jonathan Kiefer
EUT:	Trace Antenna				
Configuration:	2				
Customer:	Orthofix				
Attendees:	Bobby Harris				
EUT Power:	Battery				
Operating Mode:	Typical Operating Mode				
Deviations:	None				
Comments:	Reference antenna.				

Frequency (MHz) **2442**

Measurement Antenna Polarity **Horizontal**
Antenna Under Test (AUT) Polarity **Y**

Maximum Amplitude (dBuV/m) **94.5246**
Azimuth at Maximum **29°**
Minimum Amplitude (dBuV/m) **68.2246**
Azimuth at Minimum **227°**

Run #	16	**Test Distance (m)**	3	**Antenna Height(s)**	2.131		

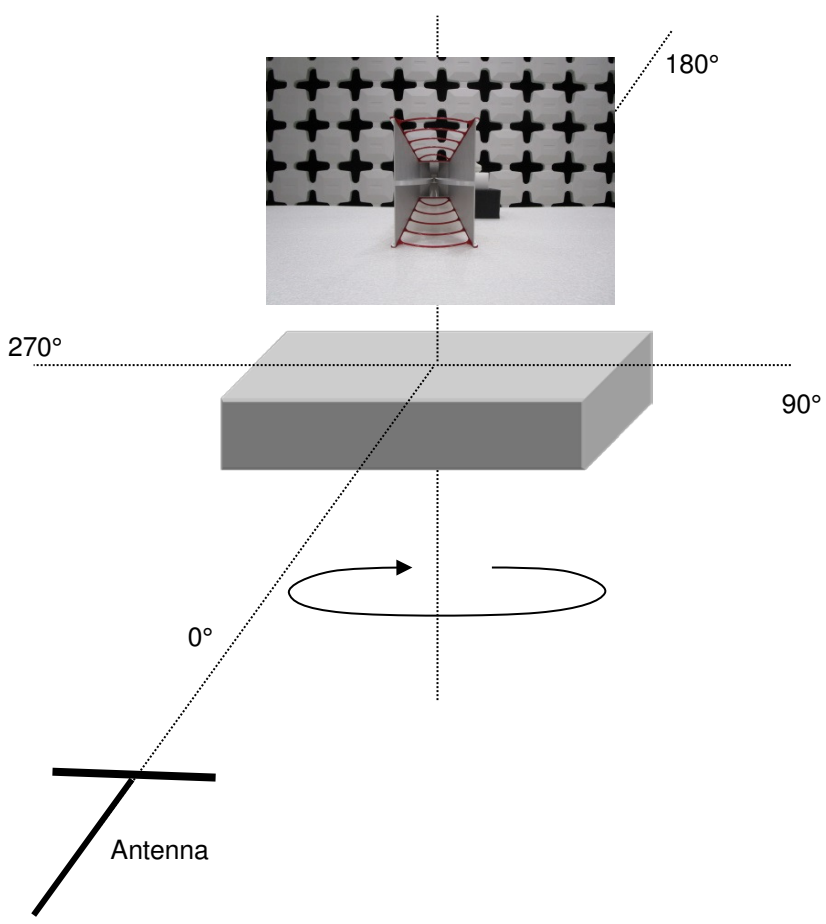

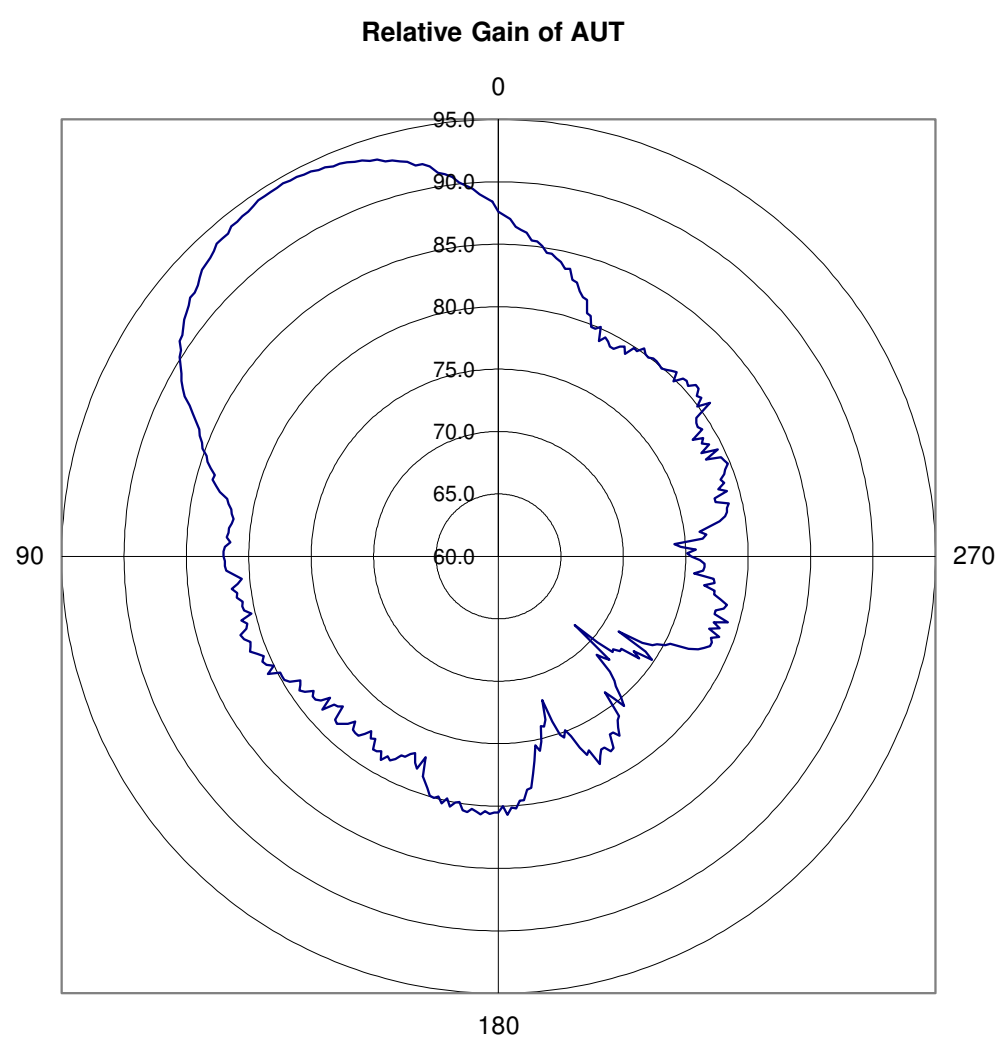

NORTHWEST EMC

RADIATED EIRP

Work Order:	OFIX0008	**Date:**	04/15/16		
Project:	None	**Temperature:**	20.1 °C		
Job Site:	TX02	**Humidity:**	49.8% RH		
Serial Number:	None	**Barometric Pres.:**	1017 mbar	**Tested by:**	Jonathan Kiefer
EUT:	Trace Antenna				
Configuration:	1				
Customer:	Orthofix				
Attendees:	Bobby Harris				
EUT Power:	Battery				
Operating Mode:	Typical Operating Mode				
Deviations:	None				
Comments:	EUT on Vertical (Y) side. PK and AVG (RMS) data. Absolute Antenna gain = MAX EIRP - conducted power + cable loss (if applicable). This data sheets shows the alternative absolute antenna gain measurement by comparing the radiated eirp of the trace antenna to the conducted output power of the direct connect unit. It is a good reference for comparison to the absolute antenna gain shown on the first page which is calculated based on the trace antenna compared to a calibrated reference antenna. Variations in the matching and any loss not accounted for with the SMA adapter provided by the customer could alter results slightly.				

Test Specifications	**Test Method**
EN 300 328 V1.9.1:2015	EN 300 328 V1.9.1:2015

Run #	16	**Test Distance (m)**	3	**Antenna Height(s)**	1 to 4(m)	**Results**	NA

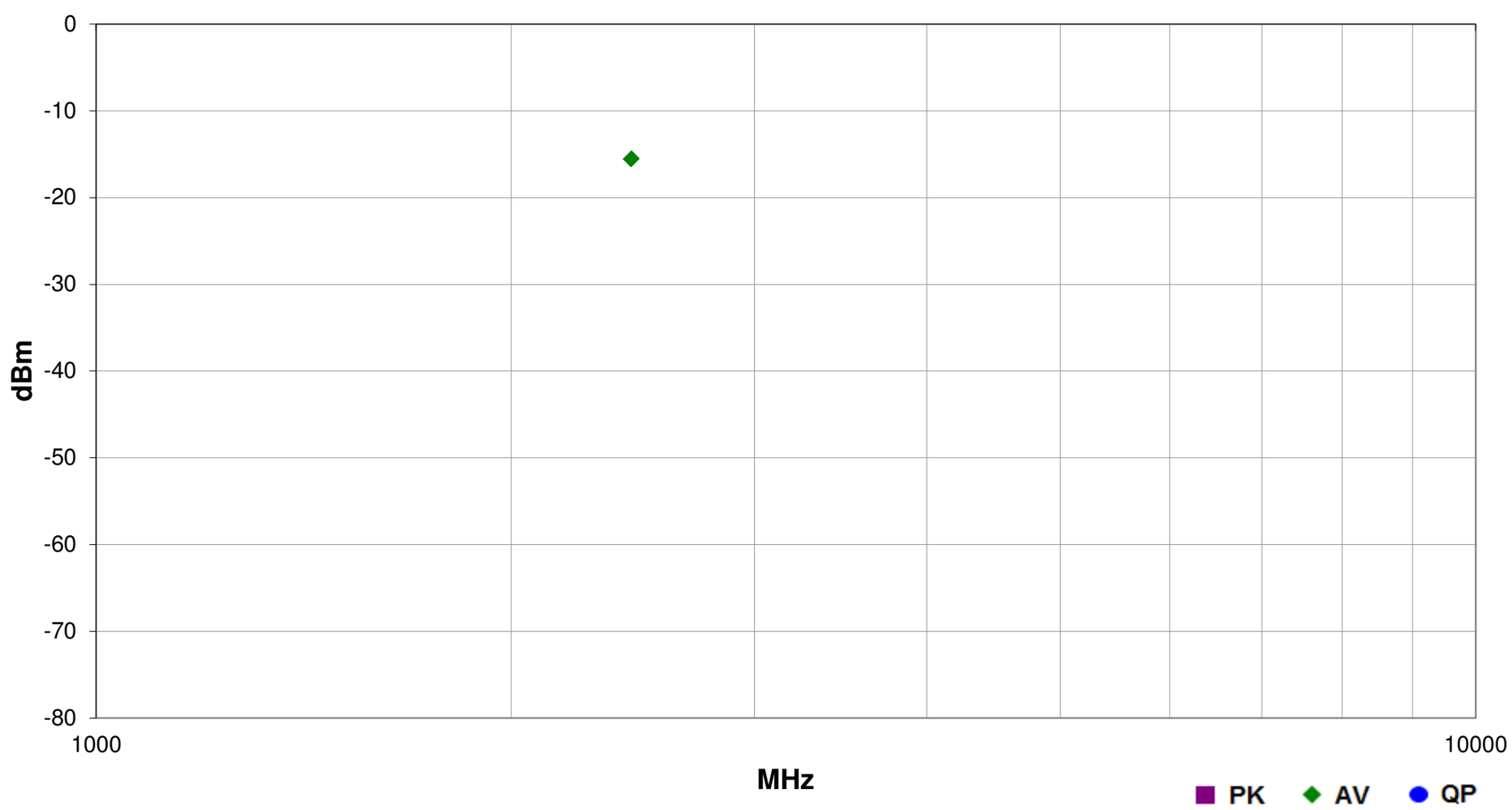

	Freq (MHz)	Antenna Height (meters)	Azimuth (degrees)	Polarity/ Transducer Type	Detector	EIRP (Watts)	EIRP (dBm)	Spec. Limit (dBm)	Compared to Spec. (dB)	Comments
	2442.010	3.7	114.0	Vert	PK	2.82E-05	-15.5	N/A	N/A	Conducted Output Power = -8.78 dBm. Antenna gain (dBi) = -15.5 - (-8.78 dBm) = -

OUTPUT POWER

NORTHWEST EMC

XMit 2015.01.14

EUT:	Trace Antenna			Work Order:	OFIX0008
Serial Number:	None			Date:	04/15/16
Customer:	Orthofix			Temperature:	20.2°C
Attendees:	Bobby Harris			Humidity:	49%
Project:	None			Barometric Pres.:	1013
Tested by:	Jonathan Kiefer	Power:	Battery	Job Site:	TX09

TEST SPECIFICATIONS	Test Method

COMMENTS

Direct Connect conducted Output Power measurement. 20.69 dB Reference offset (Attenuator plus cable loss). -4 software setting

DEVIATIONS FROM TEST STANDARD

N/A

Configuration #	2	*Signature*

	Value	Limit (<)	Result
Mid Channel, 2442 MHz	132.4 uW	N/A	N/A

OUTPUT POWER

Mid Channel, 2442 MHz						
				Value	Limit (<)	Result
				132.4 uW	N/A	N/A

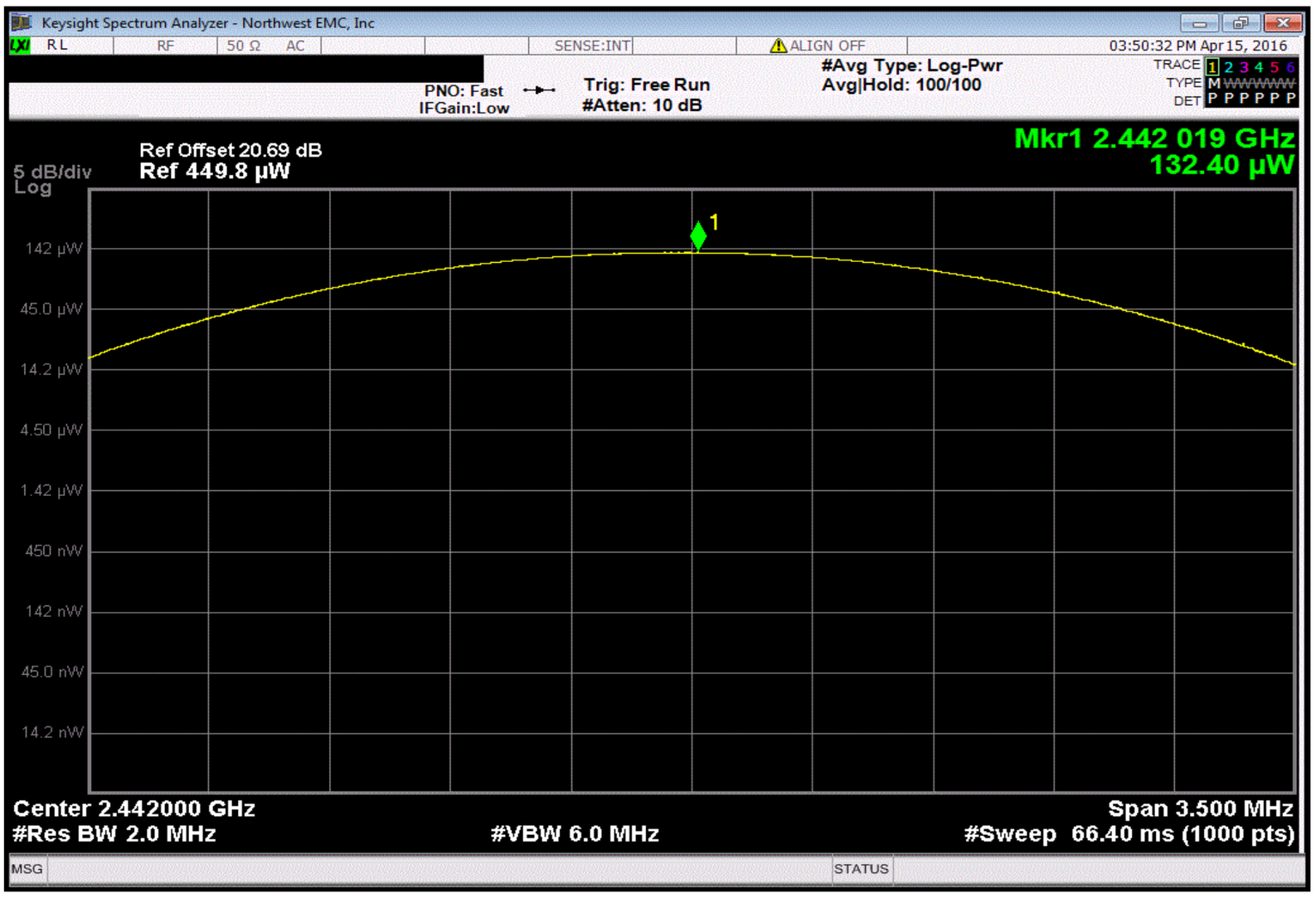

TEST EQUIPMENT

Description	Manufacturer	Model
Generator - Signal	Agilent	E4422B
Analyzer - Spectrum Analyzer	Keysight	N9010A
Cable	Fairview Microwave	SCK0963-60
Block - DC	Fairview Microwave	SD3379
Attenuator	Fairview Microwave	SA4018-20
Antenna - Double Ridge	ETS Lindgren	3115
Amplifier - Pre-Amplifier	Miteq	AMF-3D-00100800-32-13P
Cable	Northwest EMC	1-8.2 GHz
Antenna - Double Ridge	ETS Lindgren	3115
Analyzer - Spectrum Analyzer	Agilent	N9010A

ID	Last Cal.	Interval (mo)
TGS	3/27/2015	36
AFM	3/15/2016	12
TXF	11/3/2015	12
AMM	2/25/2016	12
TQY	2/25/2016	12
AJN	9/15/2014	24
PAJ	9/18/2015	12
TXC	10/21/2015	12
AJL	9/15/2014	24
AFL	10/29/2015	12

OUTPUT POWER

NORTHWEST EMC
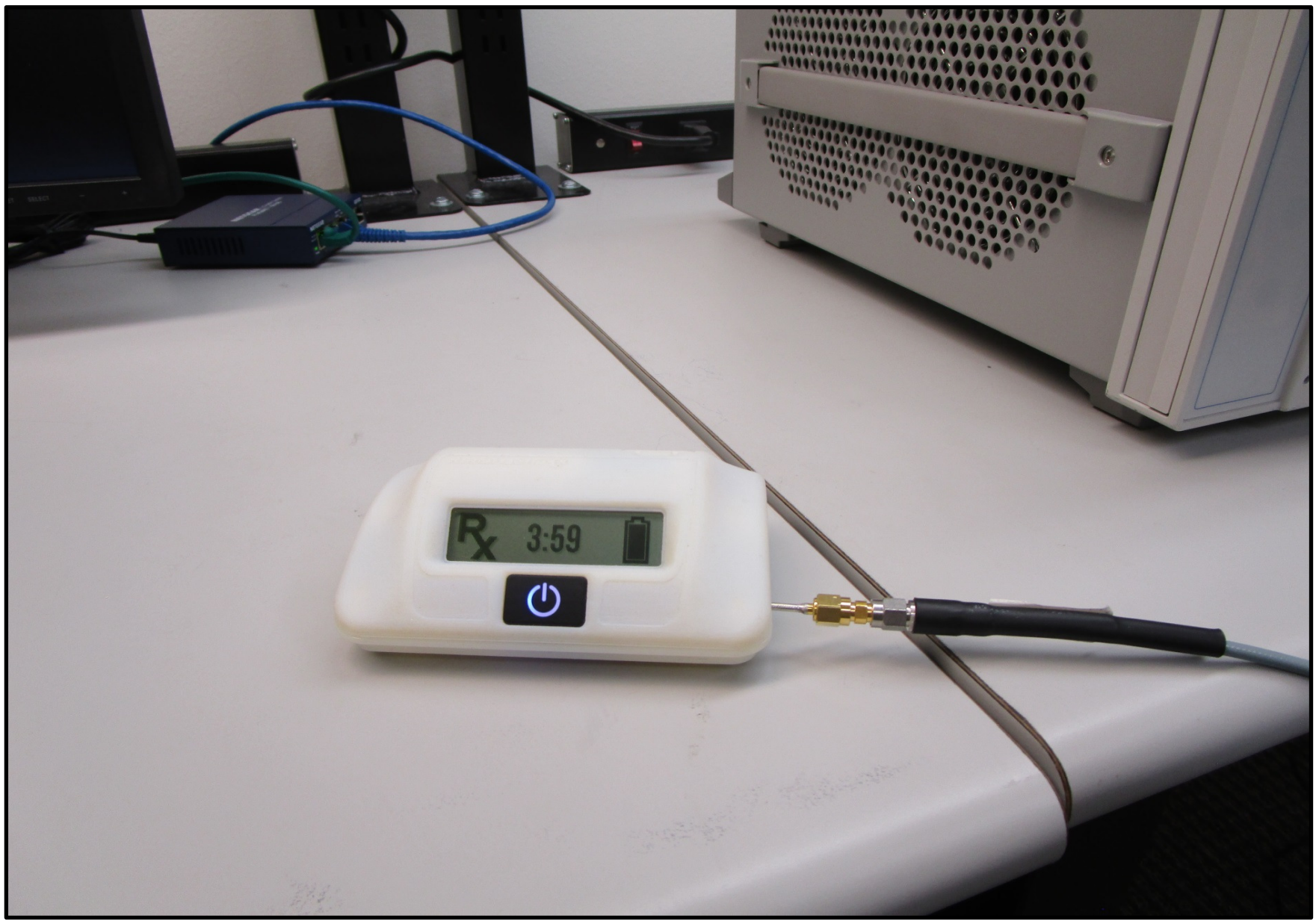
XMit 2015.01.14