Evollve Inc.

# Request for Class II Permissive Change

FCC ID： 2AHVO-OZO040101 Date：11/20/2020

TO：Federal Communication Commission

Please be notified that we，the undersigned，Evollve Inc. declare that the reasons for this Class II permissive change are as below：

Alternative PCB by removing the below part in old PCB

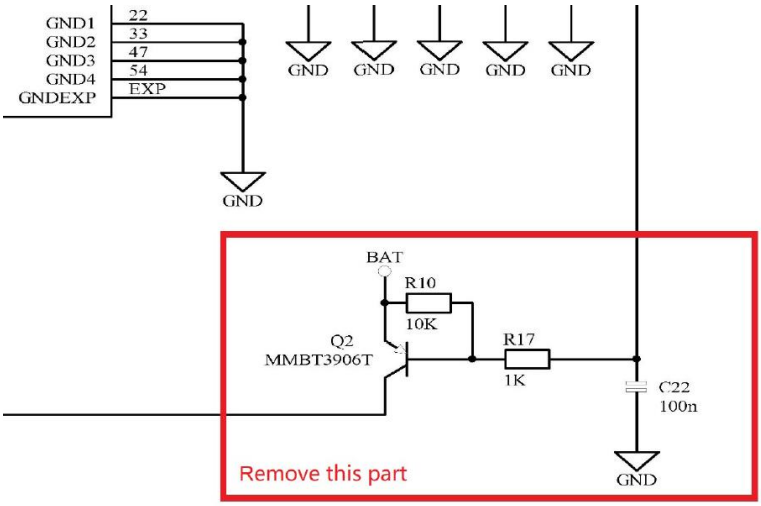


And adding the below parts in the new PCB.

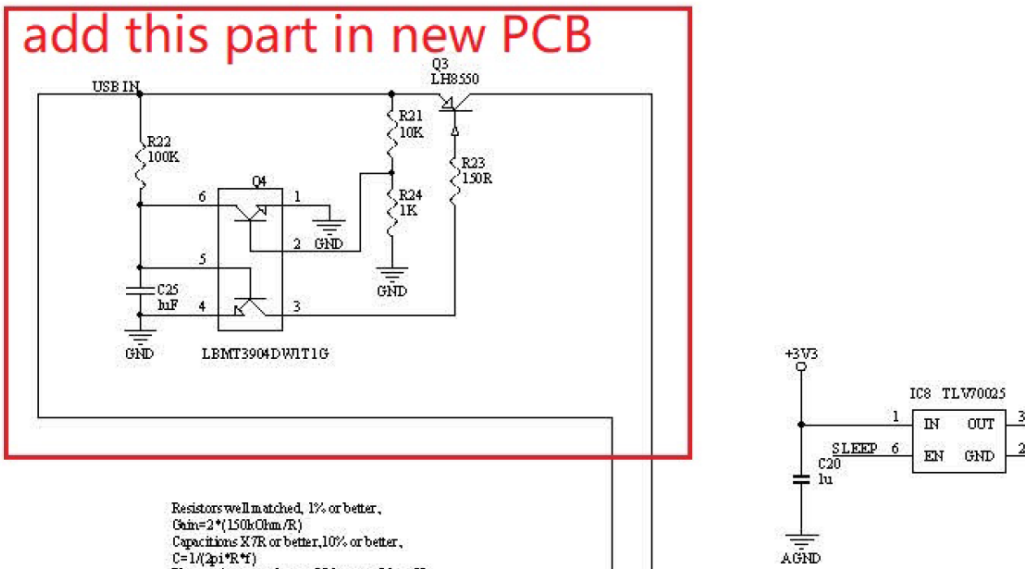

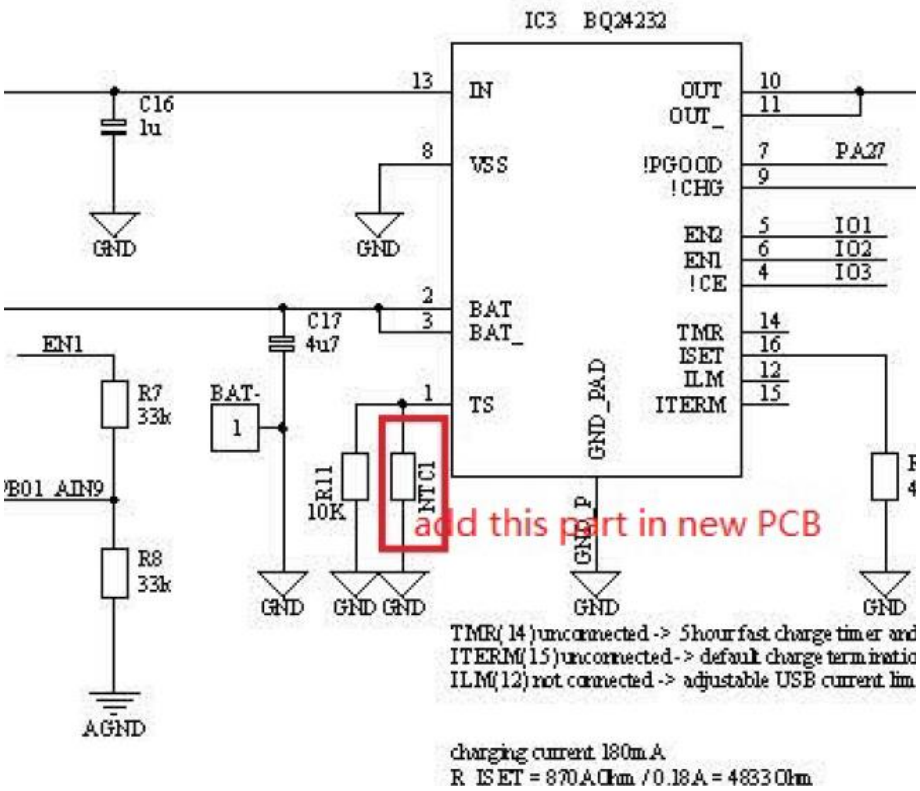


Thank you.

Sincerely.

Name (Printed): Charlie Kantz Title: Director - Supply Chain

Signature:

On behalf of Company: Evollve Inc.

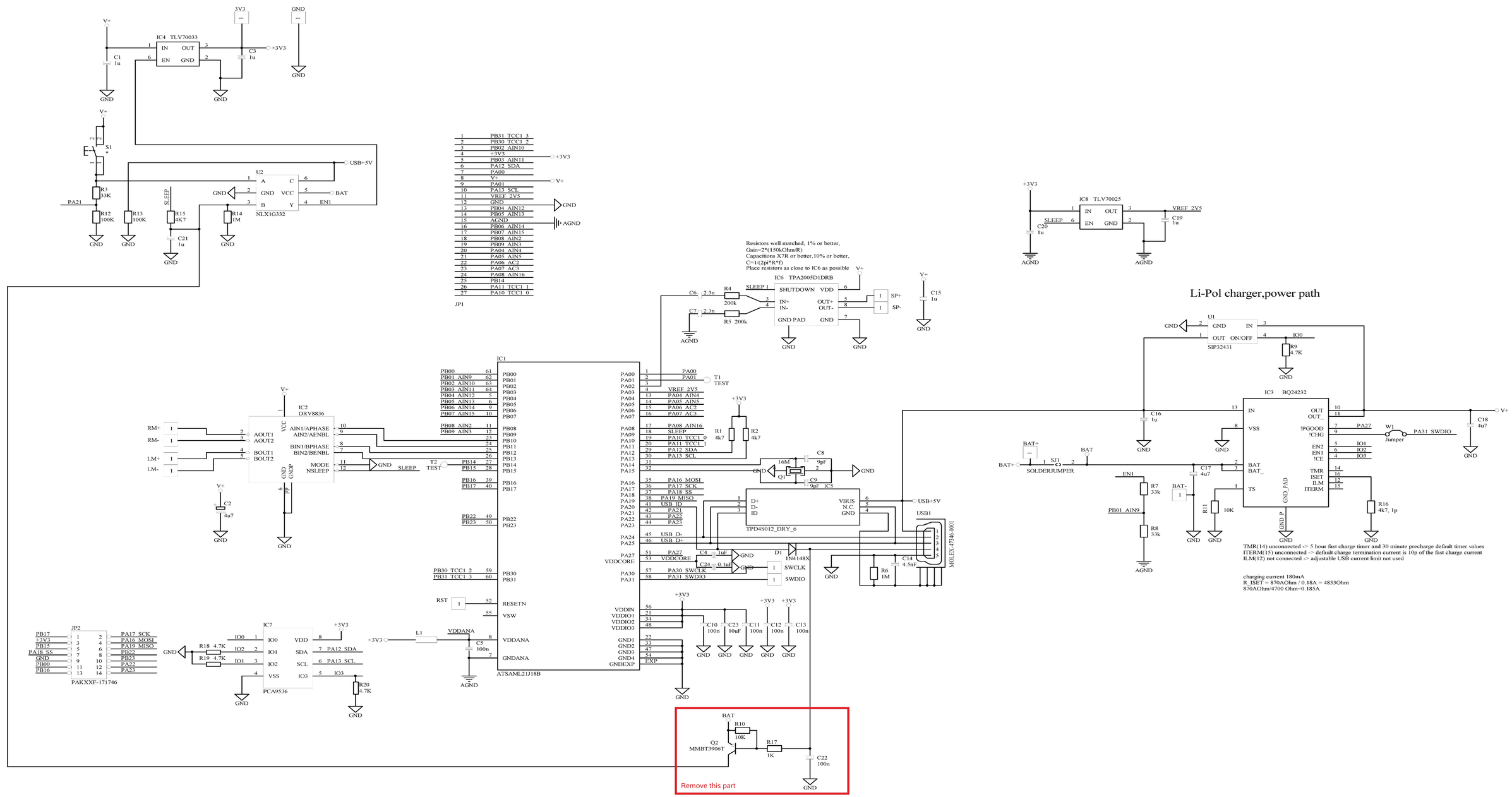


Confidential Property of
Jetta Company Ltd.

| | | | |
|---|---|---|---|
| Drawn By: | Deng Mei Jie | Title | ozobot2.0_main |
| Checked By: | Li Xiao Ming | Size: A2 | Number: ozobot2.0 Revision: 04 |
| Approved By: | Jie Yu En | Date: 2016/6/18 | Time: 09:11:14 Sheet1 of 1 |
| | | File: D:\Users\mjdeng\ | \ (8)\ozobot2.0_main(04).SchDoc |

Jetta (China) Co. Ltd.

Corresponding PCB : ozobot2.0_main(04-00)

JETTA COMPANY LIMITED

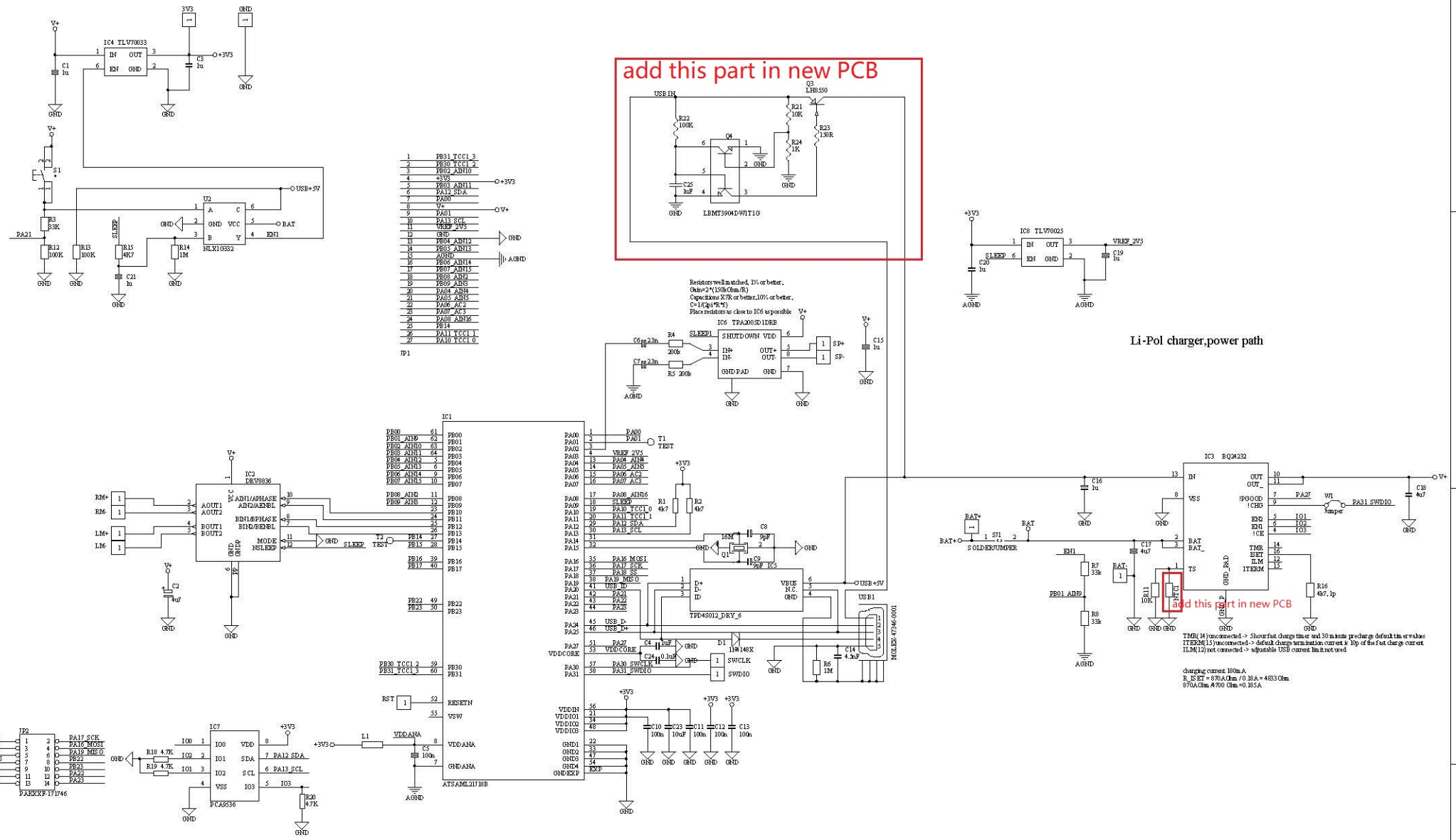


Confidential Property of
Jetta Company Ltd.

| | | | | |
|---|---|---|---|---|
| Drawn By: | Deng Mei Jie | Title | ozobot2.0_main | Jetta (China) Co. Ltd |
| Checked By: | Li Xiao Ming | Size: A2 | Number: OZ020 | Revision: 05 |
| Approved By: | Jie Yu En | Date: 8/7/2020 | Time: 14:16:25 | Sheet 1 of 1 |

Corresponding PCB : OZ020+003+0041

Cannot open file D:\Users\mjdeng\dm\JSCheng\Templates\VETTA0.bmp

File: D:\Users\xqxiang\projects\OZ020 Project\OZ020\ozobot2.0_main(0615).SchDoc