4. Balance Adjustment

STEP 1 Balance adjustment of the tilting axis

(1) Adjust the center of gravity of the camera' s vertical position in tilting axis.
Loosen the thumb screw on the titling axis and slide the sliding arm up and down to adjust the balance
* After adjustment, be sure to tighten the screw.

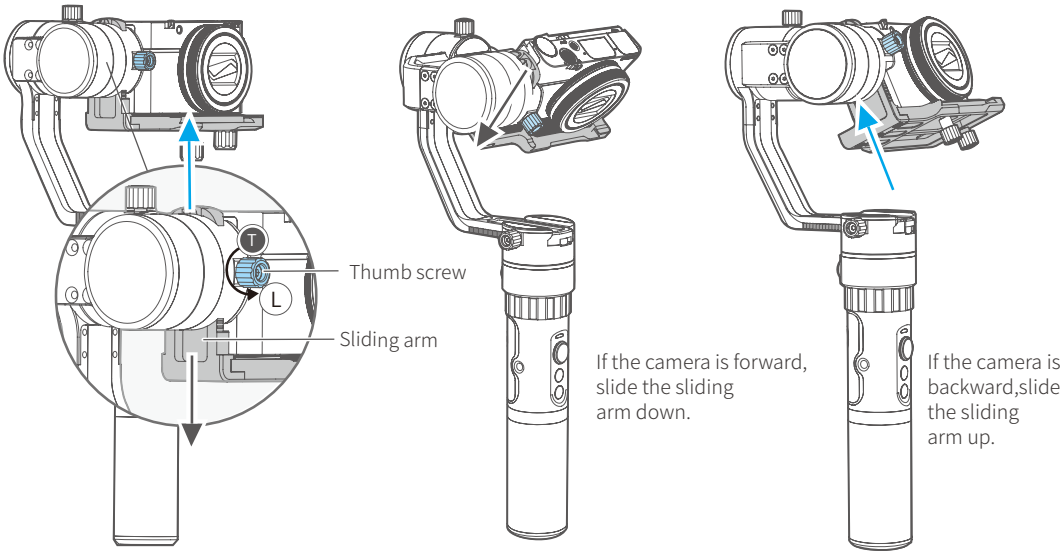

(2) Adjust the center of gravity of the camera' s horizontal position in tilting axis.
Loosen the thumb screw on the clamping plate and slide the clamping plate forward and backward to adjust the balance.
* After adjustment, be sure to tighten the screw.

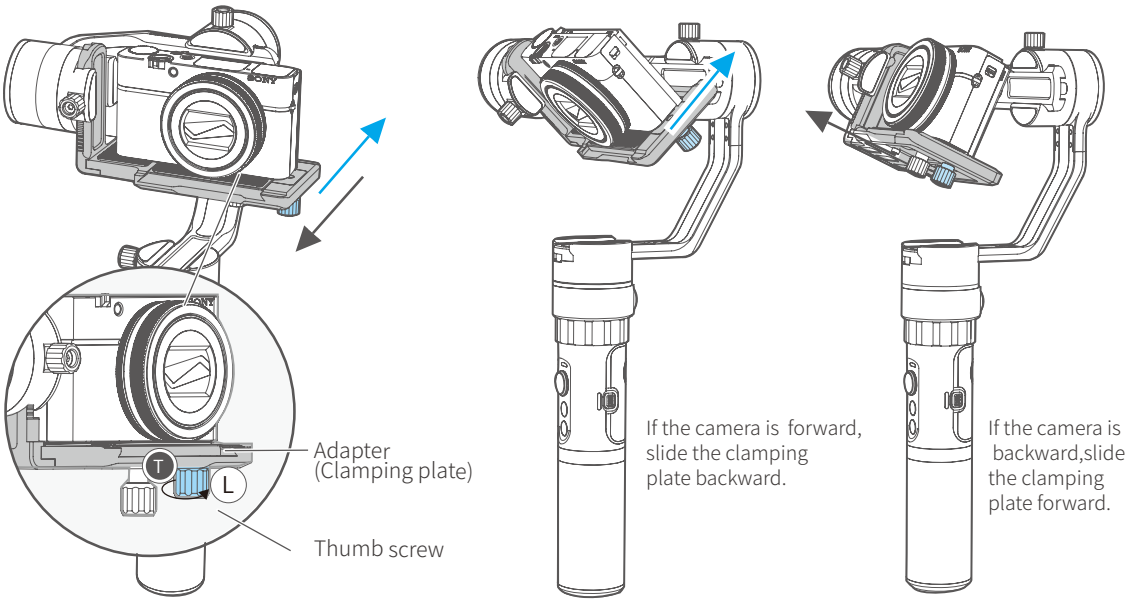

STEP 2 Balance adjustment of the rolling axis

Adjust the balance of rolling axis, after the adjustment of the centerof gravity in tilting axis.
Loosen the thumb screw on the rolling and slide the cross arm left and right to adjust.
*After adjustment, be sure to tighten the screw.

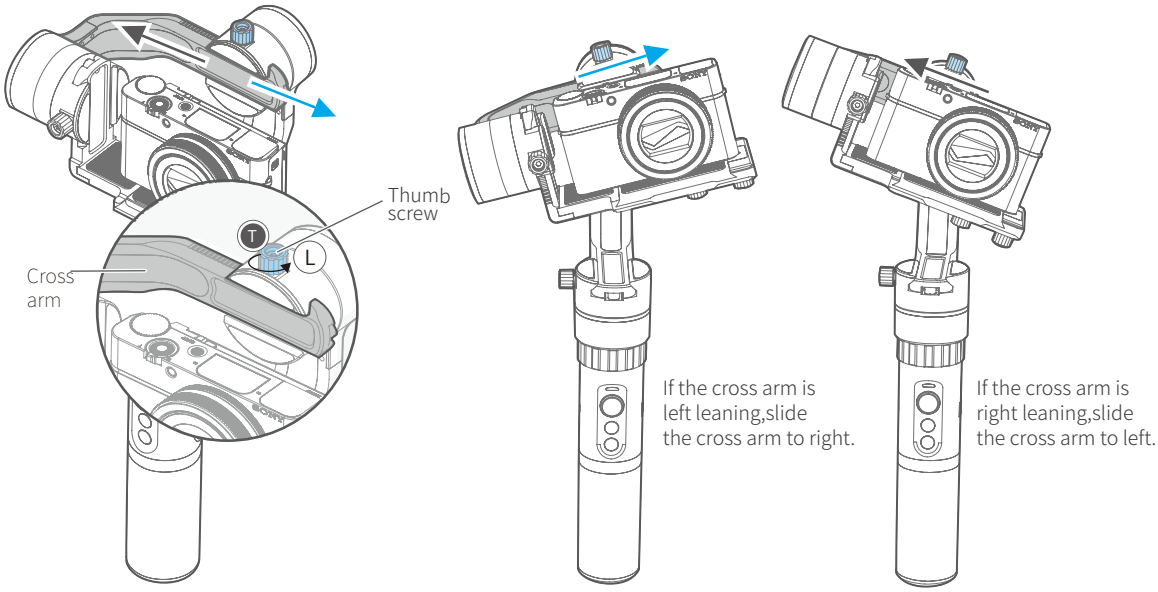

STEP 3 Balance adjustment of the panning axis

Adjust balance of the panning after the balance adjustment of the tilting and rolling.
Loosen the thumb screw onthe panning and slide the vertical arm front and back to adjust.
*After adjustment, be sure to tighten the screw.(As shown in the following figure)

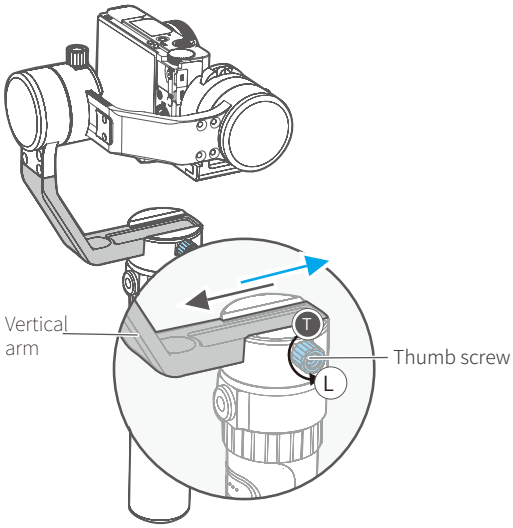

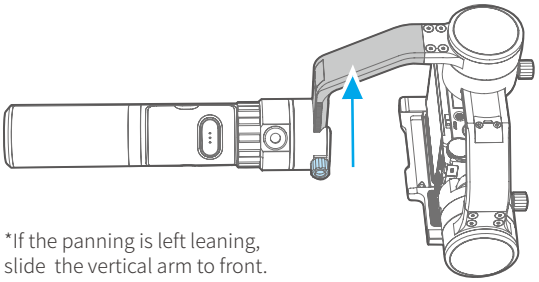

*If the panning is left leaning,
slide the vertical arm to front.

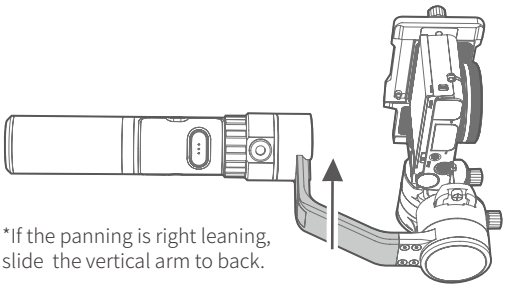

*If the panning is right leaning,
slide the vertical arm to back.

5. Operation

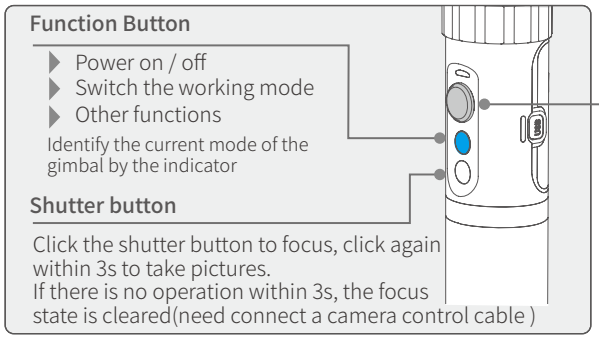

Explanation of joystick control

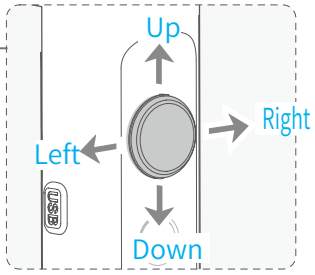

Explanation of LED indicator status

LED status	Mode / Status
Blue light flashes once	Panning mode
Blue light flashes twice	Panning and Tilting mode
Blue light flashes for three times	Standby
Blue light constant on	Lock mode / Initialize the gimbal
Blue light keeps flashing	Initialization failure / Malfunction
Red light flashes three times	Low battery
Red light keeps flashing	Entering standby / Entering power off

Explanation of Charging indicator status

LED status	Mode / Status
Blue light on, red light off	Stop charging
The blue and red light are flashing	The voltage of two batteries balance ajustment
(If the two batteries voltage difference between the larger, the process takes a long time)	
The blue and red light	Charging

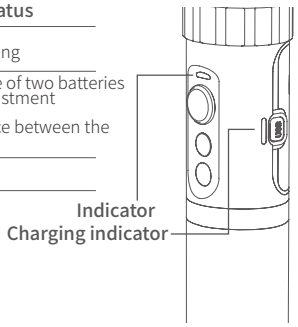

6. Download and connect APP

Download "Feiyu ON" and install it.

(1) IOS version:

(2) Android version:

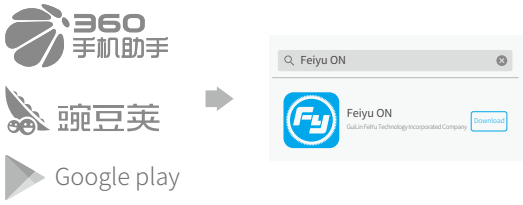

Connecting APP

Start the app on your smartphone,follow the instructions to connect the smartphone with gimbal via Bluetooth.

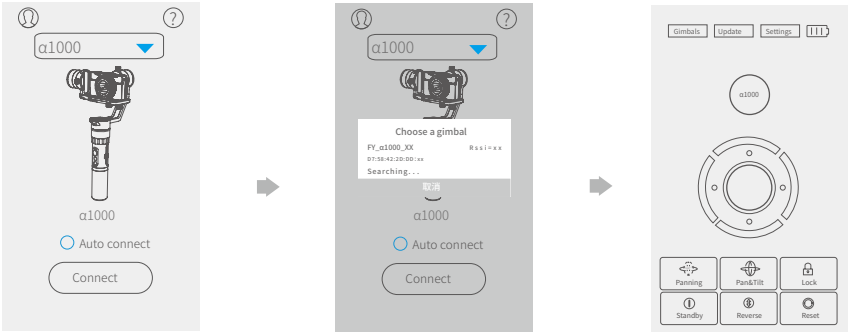

6. Firmware Upgrade

(1) Option 1: connect the gimbal with PC via micro USB cable, and then upgrade the firmware.
Please visit the official website www.feiyu-tech.com to download the relevant software for upgrading, including USB driver,firmware upgrade software and product firmware, and install the relevant software, decompress the firmware files .

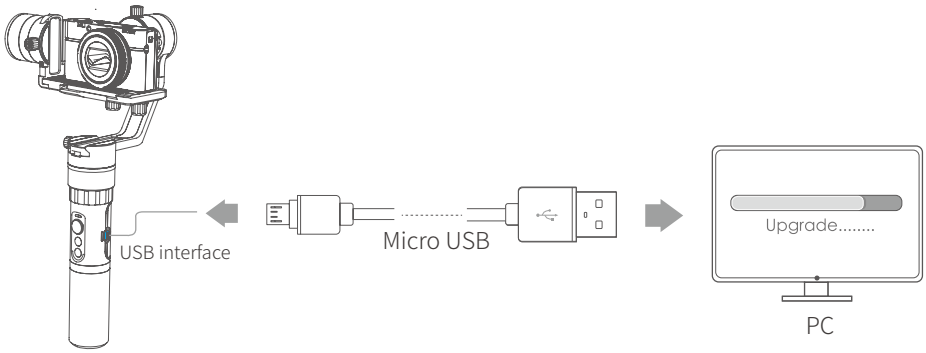

(2) Option 2: connect the gimbal with smartphone via bluetooth, and then upgrade the firmware.

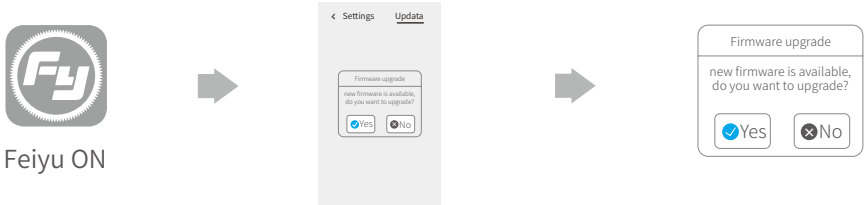

8. Gimbal initialization

You can initialize your gimbal when:

(1) when camera is not level
(2) if not used for a long period of time
(3) in case of extreme temperature variations

Adjusting steps:

1

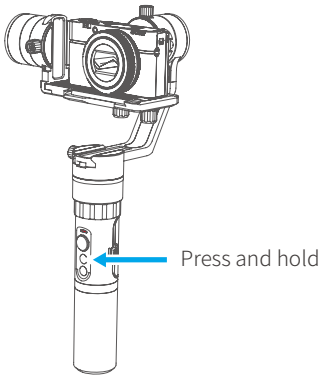

Long press function button and release it until the red light flash, the gimbal enter the standby mode,the blue light will flash 3 times periodically.

2

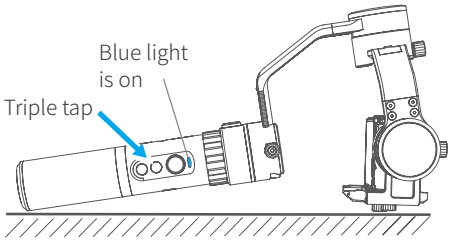

Stands on table

Lay the gimbal on a static flat surface and triple tap the function button. Initialization is successful when the blue light changes from constant on to flashing 3 times periodically.

3

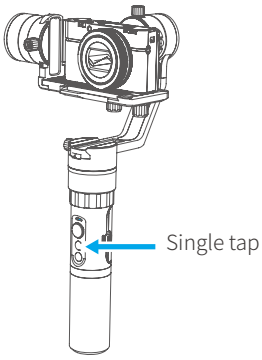

Click again to wake up the gimbal.

9. Dimensioning

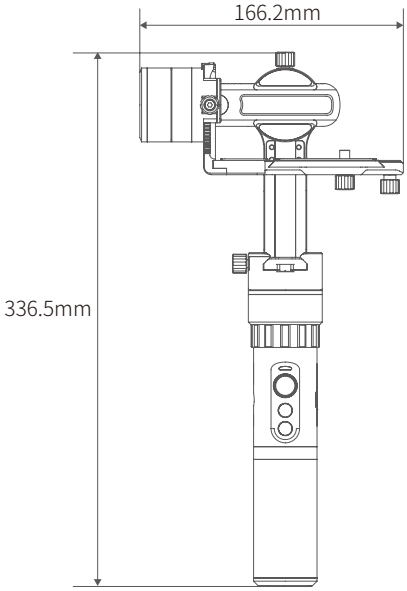

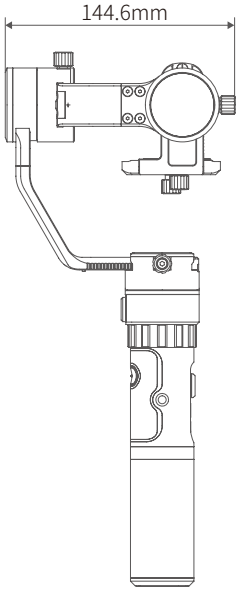

10. Parameters

Tilting / Rolling / Panning	360°
Rolling Angle	2°/s ~ 75°/s
Panning Angle	3°/s ~ 150°/s
Usage Time	6 Hours
Adaption	Sony ILCE-5100/Sony RX100/Sony α7/Sony α7s *gopro4 /5 iphone6/6s/6p/6sp/7/7p (Need to purchase related accessories)
Weight	580g(Not including the accessories of batteries,camera,camera lens and ect.)

DISCLAIMER

Prohibit any user for any illegal purpose. Users will be responsible for all behaviors of purchase and use products.

The Company assumes no liability for any risks related to or resulting from the debug and use of this product (including the direct, indirect or third-party losses).

For any unknown sources of using, we will not be at any services.

The updating and changes of product firmware and program may cause changes in function descriptions in this user manual, please read the instructions carefully before upgrading the firmware and use the corresponding user manual.

You can get the latest user manual from the official website: www.feiyu-tech.com

Feiyu Tech reserves the right to amend this manual and the terms and conditions of use the gimbal at any time.

Attention	• Please correctly assemble the gimbal in accordance with the diagram. • Please install the phone before powering on the gimbal. • When the gimbal is not in use or placed on the table, please ensure it is powered off.

This device complies with Part 15 of the FCC Rules. Operation is subject to the following two conditions: (1) this device may not cause harmful interference, and (2) this device must accept any interference received, including interference that may cause undesired operation.

Changes or modifications not expressly approved by the party responsible for compliance could void the user's authority to operate the equipment.

NOTE: This equipment has been tested and found to comply with the limits for a Class B digital device, pursuant to Part 15 of the FCC Rules. These limits are designed to provide reasonable protection against harmful interference in a residential installation. This equipment generates, uses instructions, may cause harmful interference to radio communications. However, there is no guarantee that interference will not occur in a particular installation. If this equipment does cause harmful interference to radio or television reception, which can be determined by turning the equipment off and on, the user is encouraged to try to correct the interference by one or more of the following measures:

-- Reorient or relocate the receiving antenna.

-- Increase the separation between the equipment and receiver.

-- Connect the equipment into an outlet on a circuit different from that to which the receiver is connected.

-- Consult the dealer or an experienced radio/TV technician for help.

FEIYUTECH

Create More Possibilities

For more information, please visit our official website
www.feiyu-tech.com
Support Email: service@feiyu-tech.com

www.feiyu-tech.com