FEIYUTECH

G6 Plus

3-Axis Stabilized Handheld Gimbal
for Camera

Instructions

Guilin Feiyu Technology Incorporated Company

User Manual EN V1.0

Catalogue

www.feiyu-tech.com

G6 Plus

1. G6 Plus Overview ---- 1
2. Quick Start Guide ---- 3
3. Balance the Gimbal ---- 4
   - Balance Adjustment of the Pan Axis ---- 4
   - Balance Adjustment of the Roll Axis ---- 5
   - Balance Adjustment of the Tilt Axis ---- 6
4. Basic Operation ---- 7
   - Modes ---- 7
   - Introduction of Display ---- 7
   - Joystick - operation ---- 8
   - Function Button - operation ---- 8
   - Shutter Button - operation ---- 8
   - Setting Button - operation ---- 9
     - Swith Camera Modes ---- 9
     - Setup Parameter ---- 9
   - Horizontal Adjustment Button - operation ---- 10
   - Trigger Button - operation ---- 10
   - Multifunction Knob - Zooming control / Follow focus / Control 3 Axis ---- 10
   - App - Download and Connecting ---- 11
5. Advanced Operation ---- 12
   - Manual Lock ---- 12
   - Auto-rotation Mode ---- 12
   - Connecting to Camera ---- 13
   - Firmware Upgrade ---- 13
   - Gimbal Initialization ---- 14
6. Specifications ---- 15

1. G6 Plus Overview

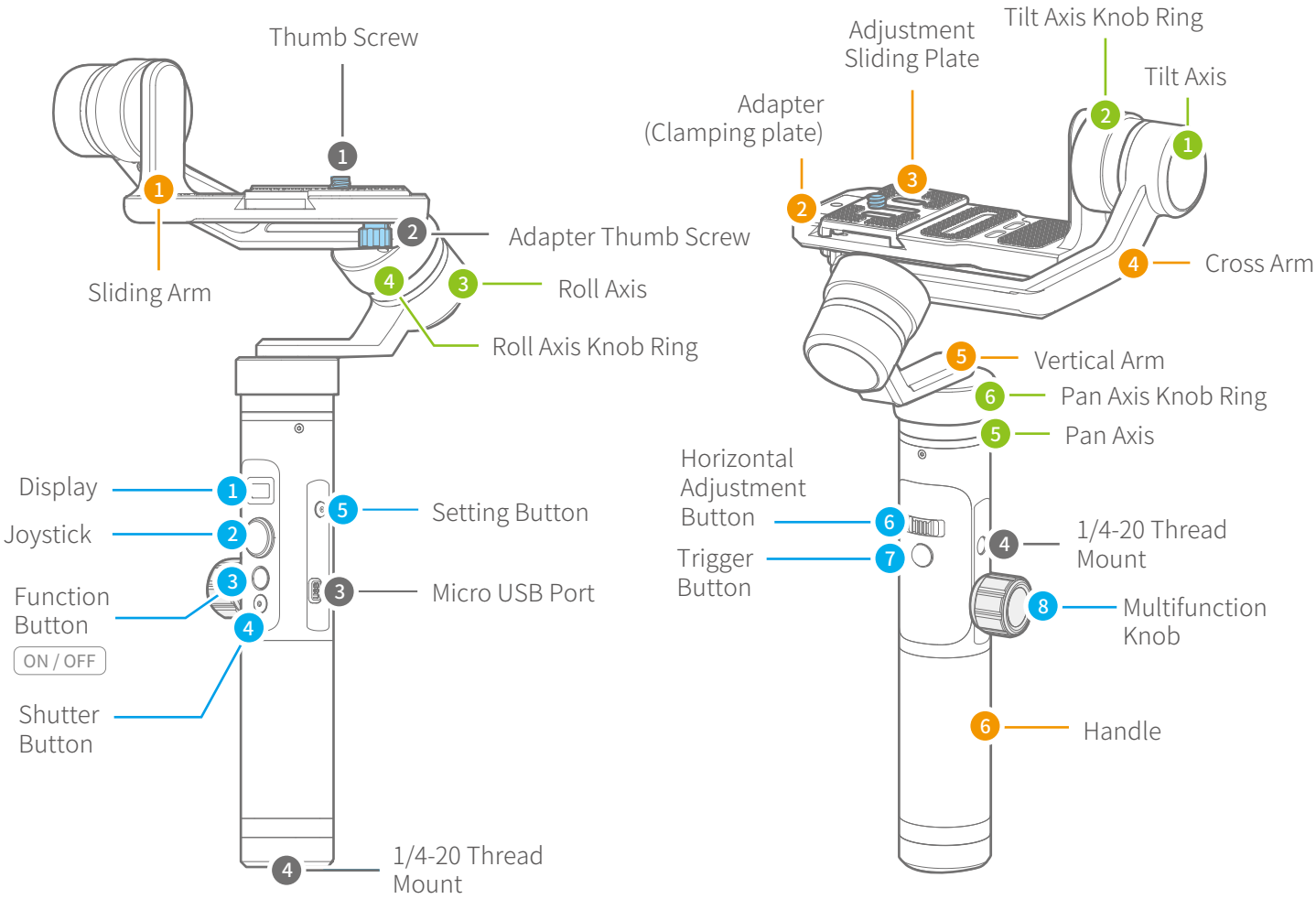

Accessories

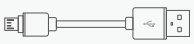

Micro USB Cable
X1

26650 Li-ion Battery
X1

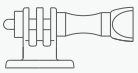

Mount Adapter
X1

Introduction of Interface and screws

❶ Thumb Screw

Used for fixing the camera or mobile phone to the adjustment sliding plate

❷ Adapter Thumb Screw

Used for fixing the adjustment sliding plate.

❸ Micro USB Port

(1) Used for charging the gimbal (input 5V / 2A), the gimbal can be used while being charged, but it is not available for external power supply.

(2) Used for firmware upgrade (computer), please refer to the firmware upgrade operation steps for details.

Please stuff up this port by the dustproof plug when it is not in use.

❹ 1/4-20 Thread Mount

Used for expand other accessories, such as the tripod which built-in 1/4 inch screw,extension rod and so on

Introduction of Display and Bottons

1 Display

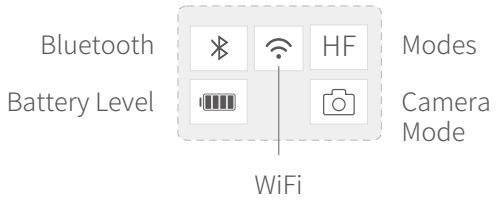

2 Joystick

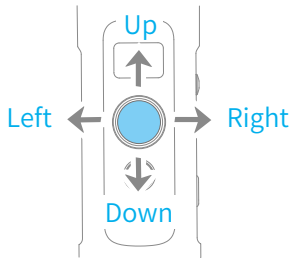

3 Function Button Refer to Page 8

Long press	**Power on / Power off**
Single tap	Panning Mode / Lock Mode
Double tap	Follow mode
Triple tap	Rotate 180° in horizontal
Quadruple tap	Auto-rotation Mode
Five tap	Initialization

4 Shutter Button Refer to Page 8

After connecting the gimbal to camera via Feiyu On App, shutter button can control the camera for shooting.

Please refer to the chapter "Connecting to camera" in page 13

5 Setting Button Refer to Page 9
(After connecting your camera)

Long press	Swith the interface for camera parameters
Single tap	Swith camera modes / main interface

Please refer to the chapter "Connecting to camera" in page 13

6 Horizontal Adjustment Button

You can control the horizon angle via the horizontal adjustment button.

Refer to Page 10

7 Trigger Button Refer to Page 10

Press and hold	Lock Mode
Double tap	Reset

8 Multifunction Knob Refer to Page 10

(1) Achieve the control to the focal length of camera, such as follow focus, zoom.

(2) Achieve the control to the angle of three axes of the gimbal

Introduction of Axis and Knob

1 Tilt Axis
Take the camera lens as the base point, and control the camera lens to move upward or downward by tilt axis.

2 Tilt Axis Knob Ring
Used for fixing the sliding arm.

3 Roll Axis
Take the camera lens as the base point, and control the camera lens to tilt to the left or tilt to the right by roll axis.

4 Roll Axis Knob Ring
Used for fixing the cross arm.

5 Pan Axis
Take the camera lens as the base point, and control the camera lens to turn left or turn right by pan axis.

6 Pan Axis Knob Ring
Used for fixing the vertical arm.

Introduction of Other Components

1 Sliding Arm
Used for adjusting the up and down centre-of-gravity position of tilt axis.

2 Adapter (Clamping plate)
Used for fixing the camera.

3 Adjustment Sliding Plate
Used for adjusting the front and back position of camera so as to adjust the front and back centre-of-gravity . position of tilt axis

4 Cross Arm
Used for adjusting the centre-of-gravity position of roll axis.

5 Vertical Arm
Used for adjusting the centre-of-gravity position of pan axis.

6 Handle
Used for holding the gimbal by one hand.

2. Quick Start Guide

1 Install Battery

Remove the bottom cap, insert a 26650 battery and then tighten the cap.

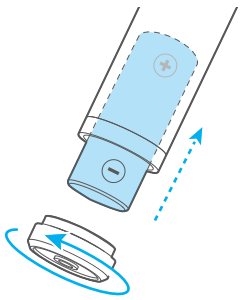

Type	26650
Battery Capacity	5000mAh

2 Charging

TIP Please fully charge the battery before power on the gimbal for the first time.

Charging with Micro USB cable as shown below.

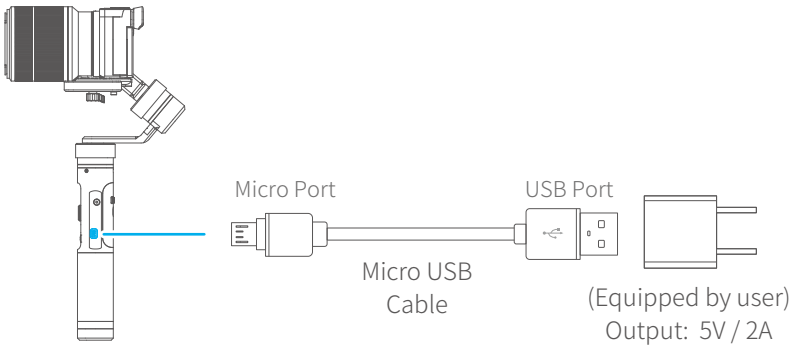

3 Put the Camera / Smartphone on

Put the Camera on

Correctly place the camera on the adjustment sliding plate, and tighten it with thumb screw in the middle sliding chute.

You can also take down the adjustment sliding plate from the adapter, install it to the bottom of the camera, and then install to the adapter.

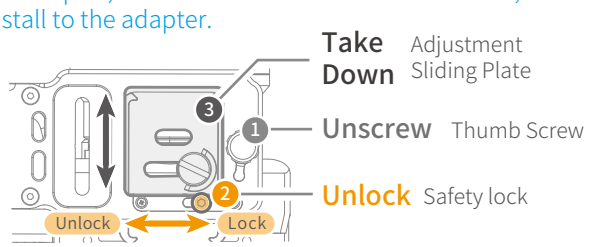

Bottom of the Adapter (Clamping plate)

If the camera doesn't have the 1/4-20 screw hole, please put the camera on mount adapter,which has 1/4-20 screw hole, and then mount it following above steps.

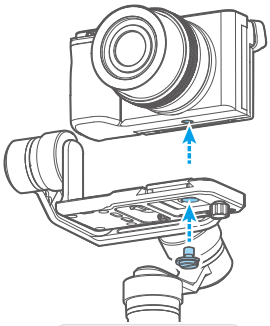

Camera Installation

Compatible for Reference

Pocket Camera

ILDC

GoPro Sports Camera

Put the Smartphone on

Correctly place the smartphone on the smartphone adapter(Optional accessory), and tighten it with thumb screw in the middle sliding chute.

Available mobile phone width: 57~84mm

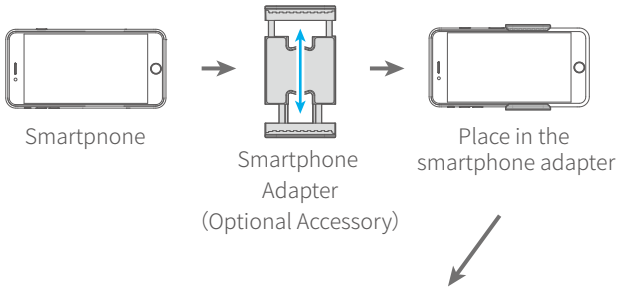

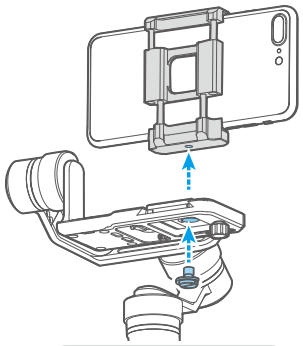

Smartphone installation

4 Balance the Gimbal

NOTE

Unbalanced center of gravity can lead to a decrease in stability, even the camera cannot be balanced.

Power on the gimbal after the center of gravity of 3 axis is balanced.

Please refer to the follow chapter "Balance the Gimbal" for operation

5 Power on / off

NOTE

(1) Please mount the camera or smartphone before powering on the gimbal.

(2) When the battery is low, please charge the gimbal.

(3) When not in use, turn off the gimbal and then remove the battery.

Power on / off

Long press the function button, the display will show FJ and release it when you hear the beep tone.

3. Balance the Gimbal (Before power on)

1 Balance Adjustment of the Pan Axis

* After adjustment, be sure to tighten the pan axis knob ring

Steps

(1) Hold the handle of gimbal, keep the handle parallel to the level ground.

(2) **Loosen** the pan axis knob ring
(Slightly loose until the vertical arm can be moved)

(3) **Move and adjust the position of vertical arm**, until the vertical arm is parallel to the level ground

(4) **Tighten** the pan axis knob ring

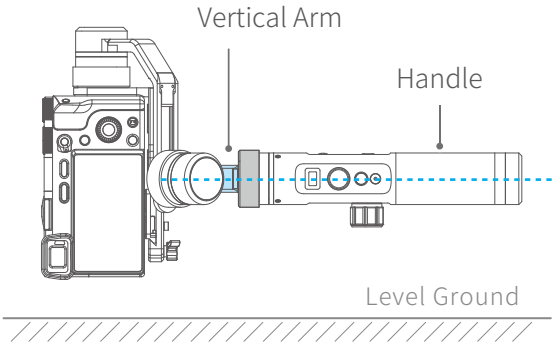

After adjustment
Vertical arm is parallel to the level ground

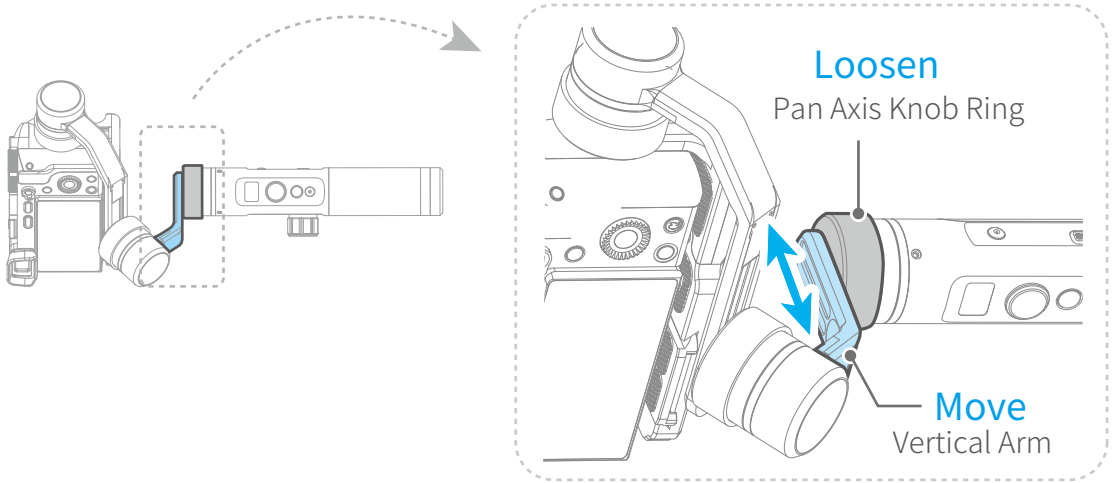

Move and adjust the position of vertical arm

2 Balance Adjustment of the Roll Axis

* After adjustment, be sure to tighten the roll axis knob ring

Steps

(1) Stand the gimbal on level ground.

(2) **Loosen** the roll axis knob ring
(Slightly loose until the roll arm can be moved)

(3) **Move and adjust the position of roll arm,** until the camera is parallel to the level ground.
(Refer to lever principle)

(4) **Tighten** the roll axis knob ring

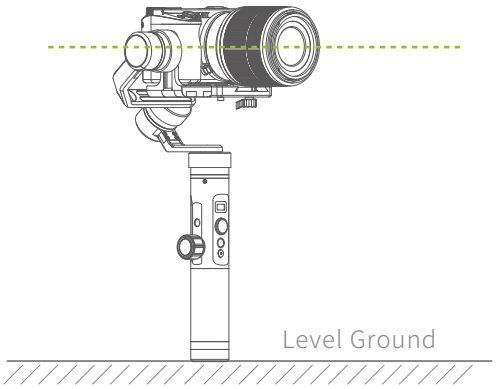

After adjustment
Camera is parallel to the level ground

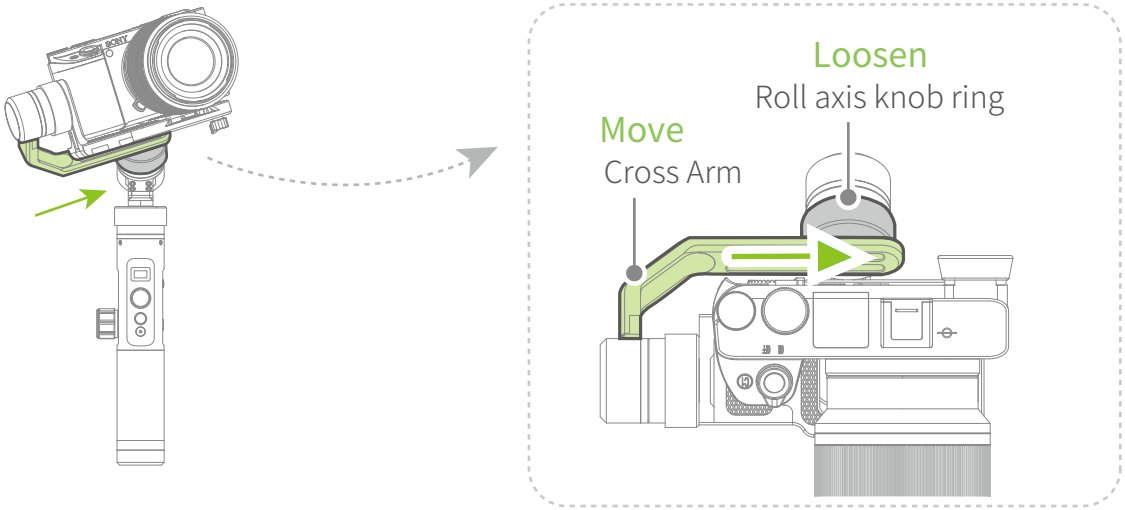

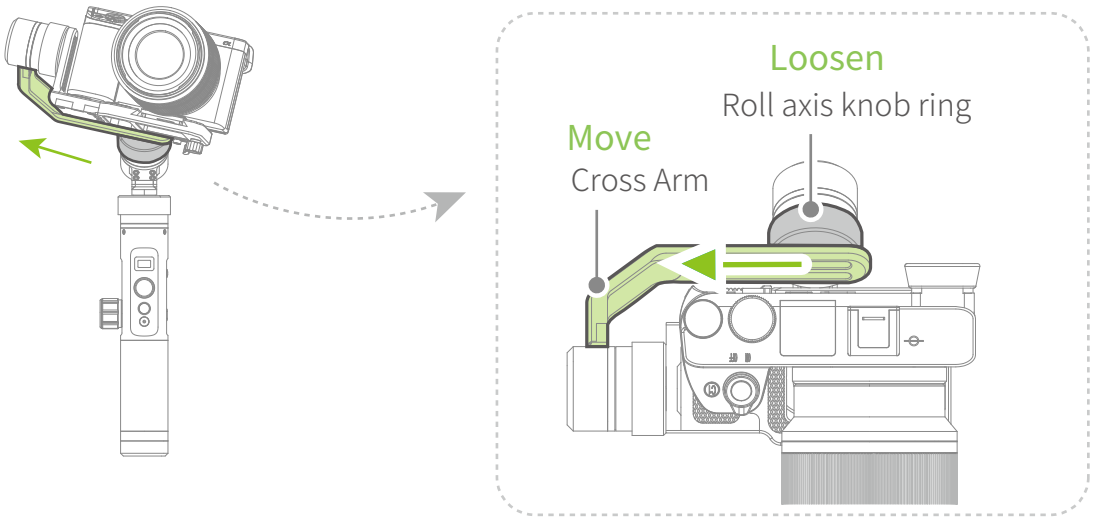

3 Balance Adjustment of the Tilt Axis

Step 1

(1) Stand the gimbal on level ground.

(2) **Loosen** the tilt axis knob ring
(Slightly loose until the sliding arm can be moved)

(3) **Move the sliding arm to the lowest position.**

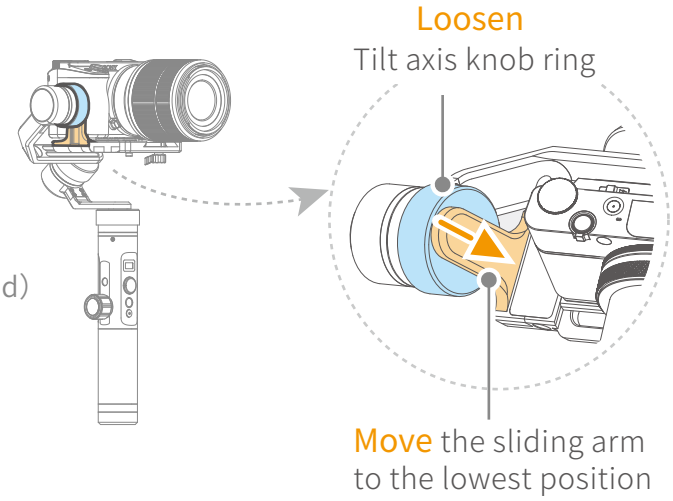

Step 2 * After adjustment, be sure to tighten the thumb screw

(1) **Loosen** the thumb screw on the bottom of the adapter(Clamping plate)
(Slightly loose until the adjustment sliding plate can be moved)

(2) **Move and adjust the position of adjustment sliding plate,** until the camera lens is parallel to the level

(3) **Tighten** the thumb screw

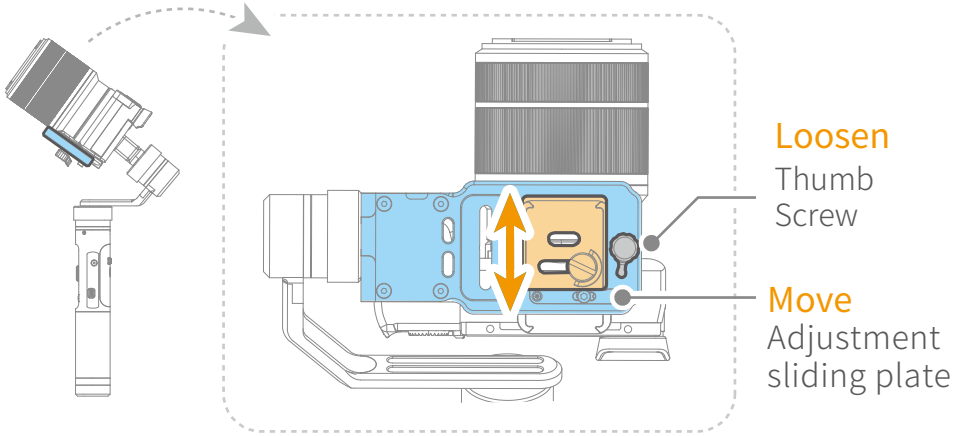

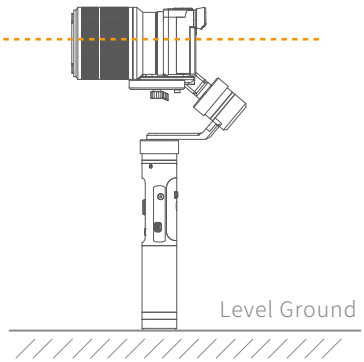

After adjustment
Camera lens is parallel to the level ground

Step 3

* After adjustment, be sure to tighten the tilt axis knob ring

(1) At any pitching angle, give an angle to the camera at random.

(2) **Slightly adjust the position of sliding arm,** until it keeps still without shaking

(3) **Tighten** the tilt axis knob ring

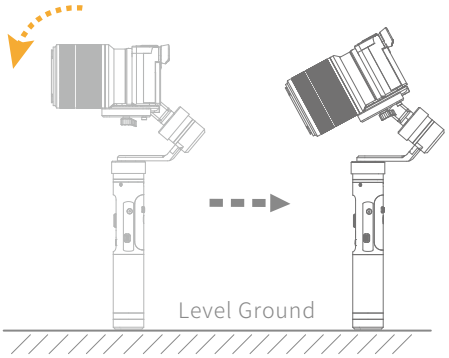

After adjustment
At any pitching angle, it can keep still without shaking

4. Basic Operation

Modes

Panning Mode (Default mode)

The roll and tilt direction are fixed, and the camera moves according to the left-right movements of the user's hand.

Follow Mode

The roll direction is fixed, and the camera moves according to the left-right movements, up-down movements of the user's hand.

Lock Mode

The orientation of the camera is fixed.

Reset

Return to panning mode, three axises return to default position.

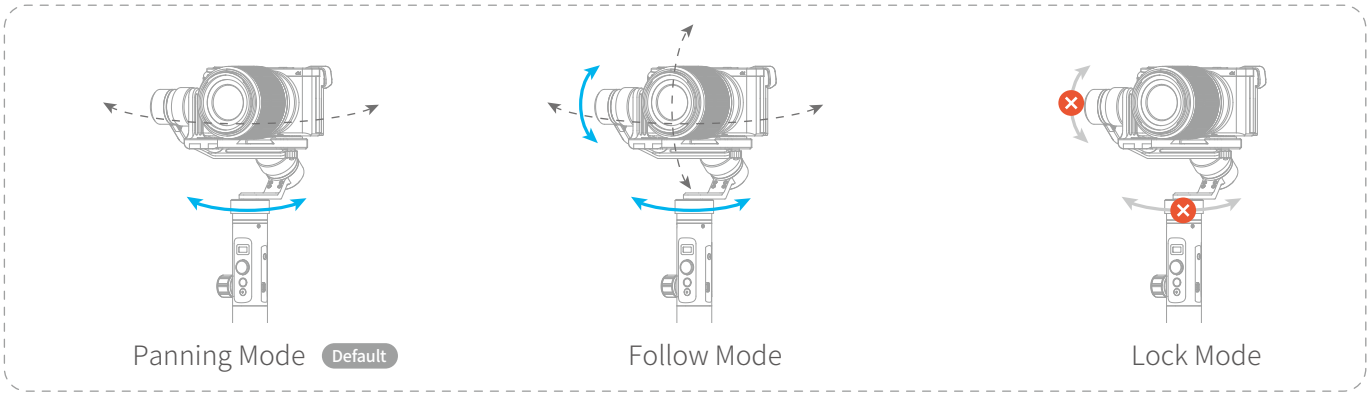

Introduction of Display

Display icon	Mode / Status
HF	Panning Mode
AF	Follow Mode
LK	Lock Mode
	Bluetooth is connected
	Bluetooth is not connected
SET WIFI VIA APP	Prompt for users to open the App settings in order to connect via WiFi

Display icon	Mode / Status
	Battery Level
	Camera photo shooting
	Camera video shooting
	WiFi is connected
	WiFi is not connected
	Camera is not connected Please refer to the chapter "Connecting to camera" in page 13

Joystick - operation

Upward
(1) Camera lens upward
(2) Select the option above

Move to left
(1) Camera lens move to left
(2) Select the option on the left
(3) Cancel

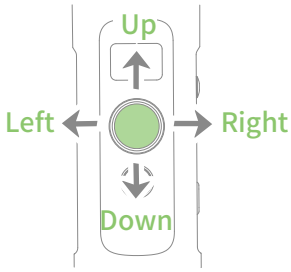

Move to right
(1) Camera lens move to right
(2) Select the option on the right
(3) Confirm

Downward
(1) Camera lens downward
(2) Select the option below

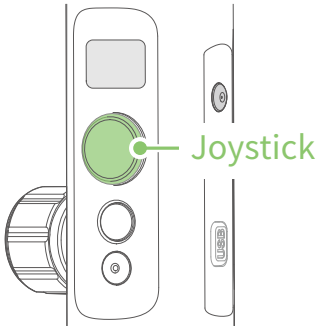

Function Button - operation

Note: The firmware upgrade may occur manual operation function and the actual product features do not match. Please find the latest manual on the official website.

Single tap	Panning Mode / Lock Mode	Single tap to switch between panning mode and lock mode
Double tap	Follow mode	Under all follow, single tap to switch to locking mode
Triple tap	Rotate 180° in horizontal	Single tap to switch between panning mode and lock mode
Quadruple tap	Auto-rotation Mode	Enter auto-rotation mode Please refer to the chapter "Auto-rotation Mode" in page 12
Five tap	Initialization	Enter initialization Please refer to the chapter "Gimbal Initialization" in page 14

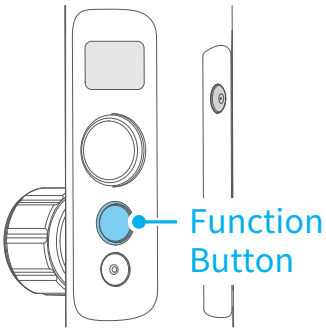

Shutter Button - operation

After connecting the gimbal to camera/smartphone via Feiyu On/ Vicool App, single tap it to control the recording of the camera / smartphone.

Single tap	Shooting / Start shooting / Stop shooting	On the main interface of the gimbal display

Please refer to the chapter "Connecting to camera" in page 13

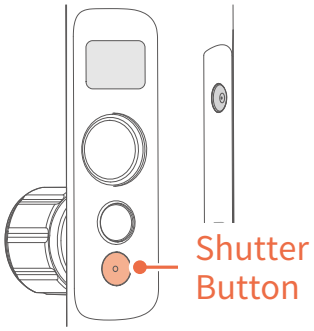

Setting Button - operation

After connecting the gimbal to camera via Feiyu On App, the setting button can switch the camera modes. Using the setting button and joystick to setup parameters.

Please refer to the chapter "Connecting to camera" in page 13

Swith Camera Modes

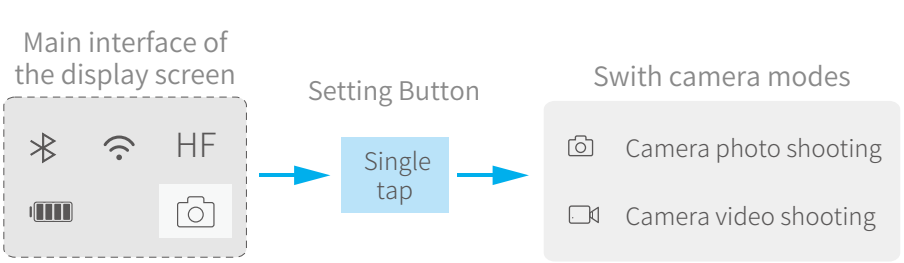

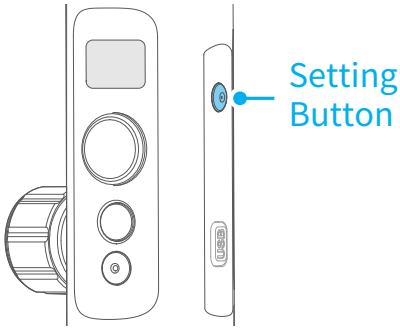

Support Cameras for Reference:
Sony RX0 / GoPro HERO series sports cameras / Panasonic LX10 / Panasonic GH4

Setup Parameter

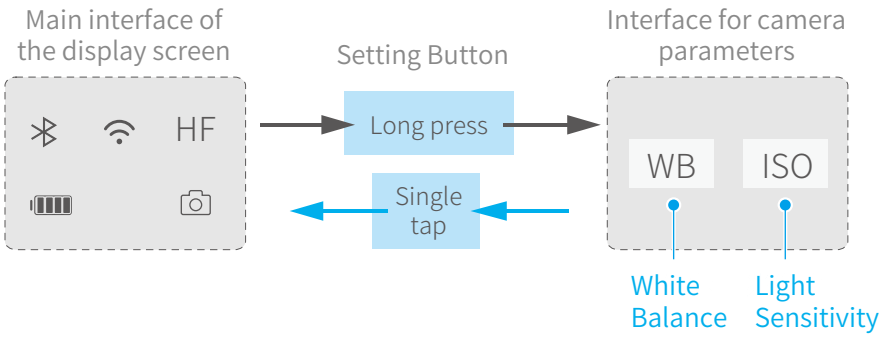

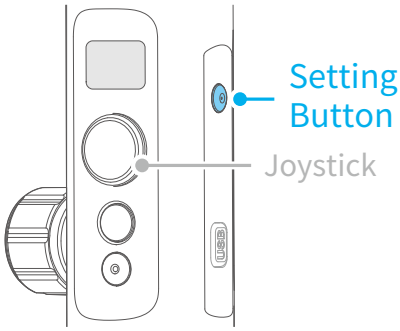

WB Setting	
AWB	Auto white balance
	Daylight
	Shade
	Cloudy
	Tungsten

ISO Setting
auto
100
125
200
400
800
1600
3200
6400
12800

Using the joystick to set up parameters

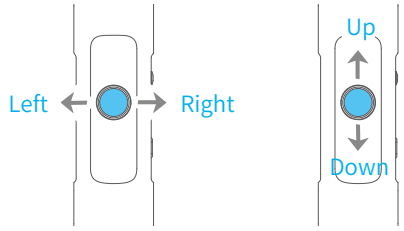

Setting Parameters:

Joystick	Explanation
Move to right	To the right option / Confirm
Move to left	To the left option / Cancel
Move to up / down	Modify Parameters

Horizontal Adjustment Button - operation

You can control the horizon angle via the horizontal adjustment button.

The control angle is -30° ~ +30°

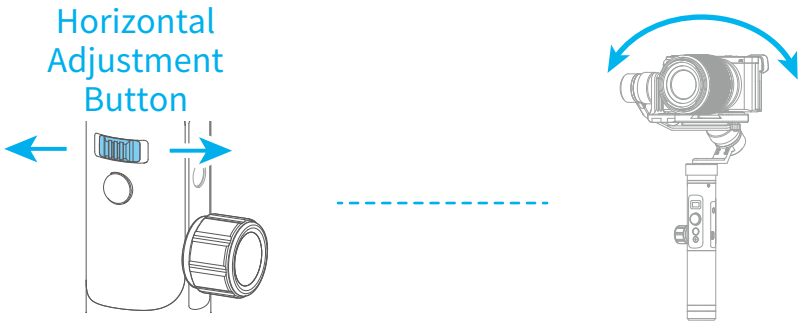

Trigger Button - operation

Press and hold	Lock mode
Double tap	Reset

In the panning mode or follow mode, press and hold the trigger button to enter the lock mode, release it to return previous mode

Return to panning mode, tilt,roll and pan axis return to initial level

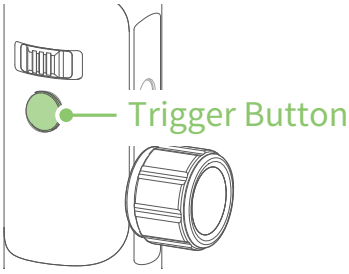

Multifunction Knob - Zooming control / Follow focus / Control 3 Axis

Single tap	Switch adjustment option
Rotate	Adjust by rotating
Long press	Select the device you want to control

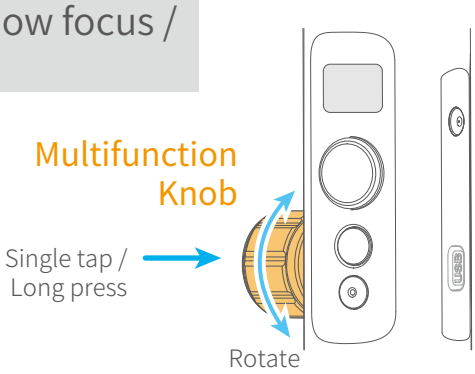

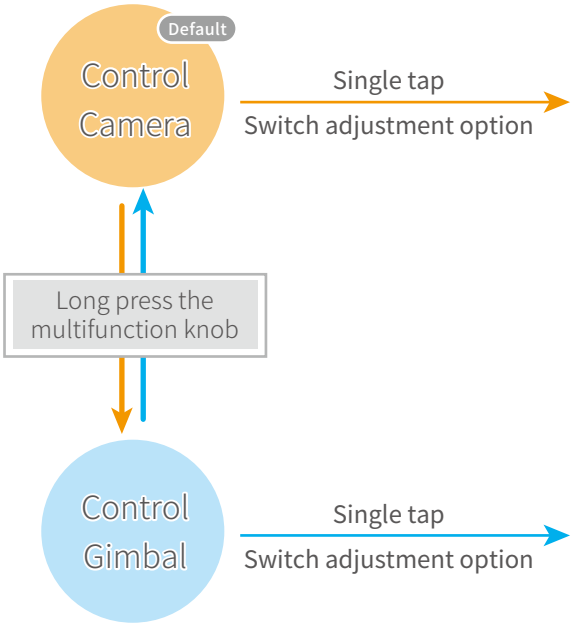

Display	Explanation	
Zoom * Default	Zooming control	Camera supports zooming control
Follow Focus *	Follow focus	Camera supports follow focus

* After connecting your camera

Please refer to the chapter "Connecting to camera" in page 13

Display	Explanation
Pan Control	Control the pan axis rotation
Roll Control	Control the roll axis rotation
Tilt Control	Control the tilt axis rotation

App - Download and Connecting

* Requires iOS 9.0 or later, Android 5.0 or later

Using the **Feiyu ON** App when you **mount your camera** on the gimbal

iOS Version

Android Version

Using the **Vicool** App when you **mount your smartphone** on the gimbal

iOS Version

Android Version

Or search and download the "Feiyu ON" / "Vicool" App on the following application platform:

App Store

Google play

Connecting App

Turn on the Bluetooth and run the App on smartphone, follow on the instructions to connect smartphone to gimbal via bluetooth. Take the Feiyu ON app connecting for example.

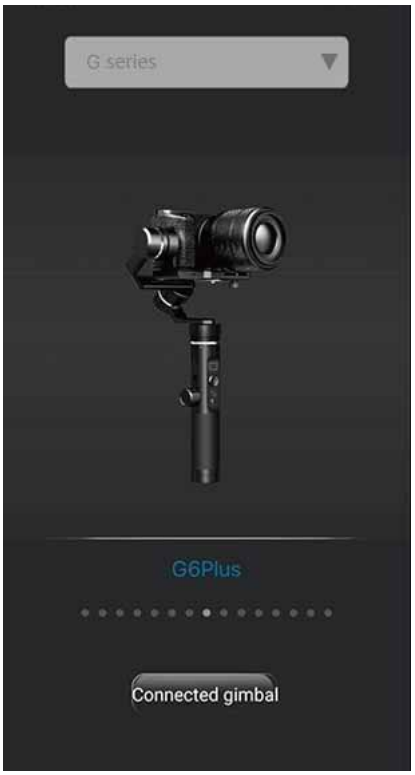

1

2

3

5. Advanced Operation

Manual Lock

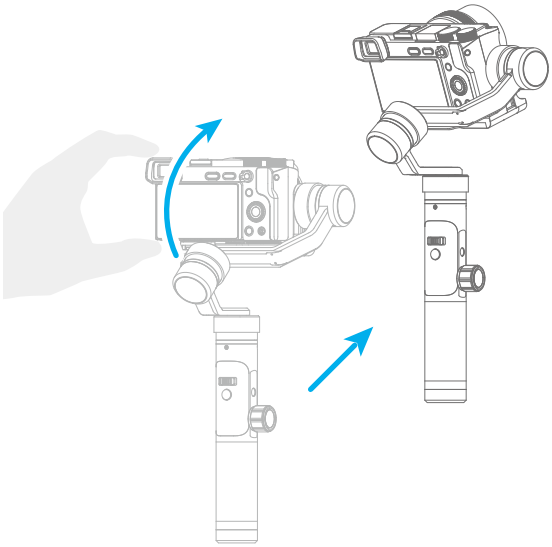

Camera can be manually positioned while in panning mode , follow mode or lock mode. Both the pan axis and tilt axis can be manually set up.

Manually move camera to desired position,and hold for half a second. New tilt and/or pan positions are automatically saved.

Take the tilt axis setting for example:

Auto-rotation Mode

The G6 Plus gimbal can easily create constant speed movements in the auto-rotation mode.
This mode can be used for recording both regular video and motion timelapse photography.
For better performance, attach gimbal to the FeiyuTech tripod, or other tripod, to keep it completely still.

Set rotation speed in Feiyu ON App

Both the pan and tilt directions can be rotated.

Connect to the Feiyu ON App and select desired speed from the auto-rotation mode rate option in the settings menu.

G6 Plus Rotation Speed												
9s/ turn	18s/ turn	24s/ turn	30s/ turn	1min/ turn	2min/ turn	4min/ turn	8min/ turn	15min/ turn	30min/ turn	1h/ turn (Default)	4h/ turn	8h/ turn

(1) Enter auto-rotation mode

Enter auto-rotation mode by quadruple tapping the function button.

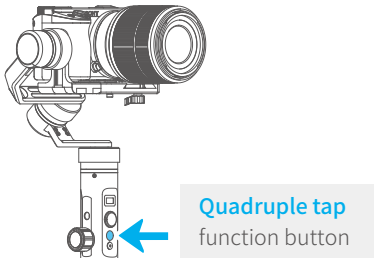

(2) Set rotation start position

Record the first position (rotation start position) by manually moving camera to desired position. Hold in position for half a second. Single tap the function button to record rotation start position.

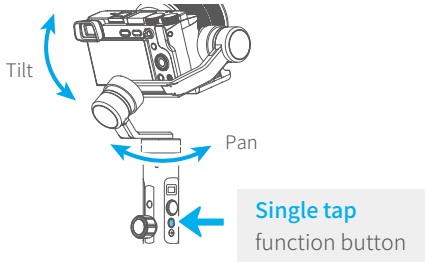

(3) Set rotation end position

Record the second position (rotation end position) by manually moving camera to desired position. Hold in position for half a second. Single tap the function button to record rotation end position.

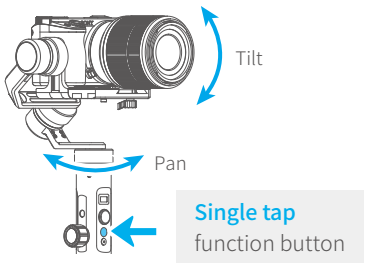

(4) Start auto rotation movements

The gimbal automatically restores to the start position, while the tilt axis and pan axis start rotating at a constant speed according to pre-set speed to end position, repeat step (2) (3) to start again.

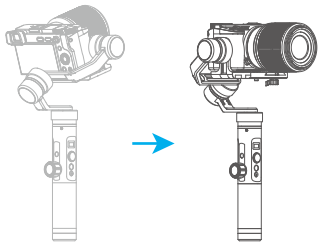

Exit → **Double tap** Trigger button → Exit the auto-rotation mode and reset

Connecting to Camera

G6 Plus gimbal can connect to the camera by Feiyu ON App.

Operations available after connecting to the camera:

Button	Operation	Function
Setting Button	Single tap	Single tap in the main interface of the gimbal display can switch to the camera modes
Shutter Button	Single tap	On the main interface of the gimbal display, single tap for photo shooting / start shooting / stop shooting

Steps of connecting to camera:

(1) Turn on your sports camera's WiFi (2.4GHz)
(2) Successively select "Settings" -- "Parameters Settings" --"WiFi Settings" on Feiyu ON App
(3) Select camera model
(4) Select your camera connection name and enter the correct connection password of your camera
(5) Waiting for connecting
(6) Connect successfully

If icon appears on the display screen, it means the gimbal failed to connect to the camera, try to restart gimbal or camera, or reconnect according to above steps.

If the WiFi is not connected for a long time, please restart the camera's WiFi.

Firmware Upgrade

Connect the gimbal to the Feiyu ON App, to upgrade the firmware through the App.

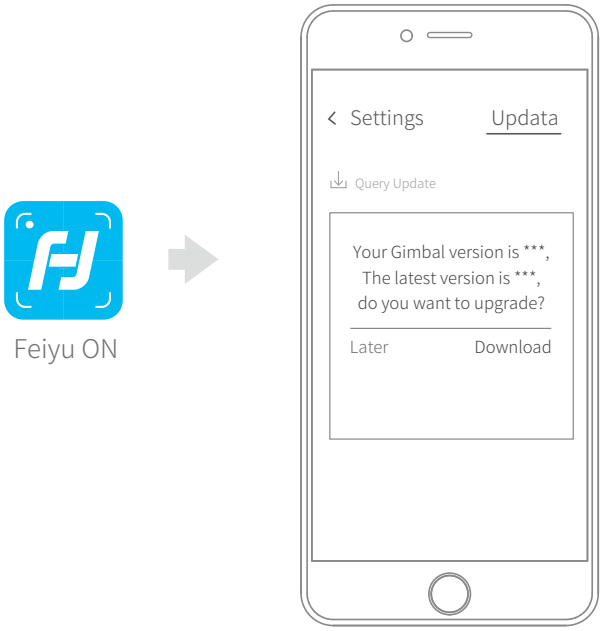

Gimbal Initialization

You can initialize your gimbal when:

(1) When camera is not level

(2) If not used for a long period of time

(3) In case of extreme temperature variations

Adjusting Steps

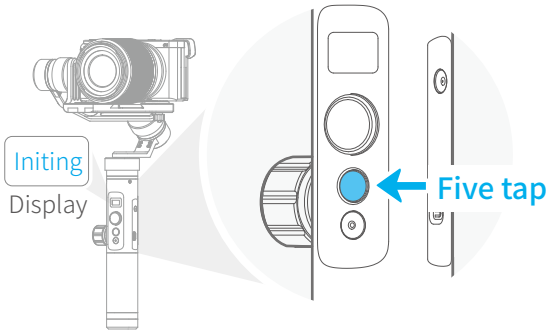

1 Tap the function button for 5 consecutive times and hear the "beep" sound, and the motor will stop working and "Initing" shows up.

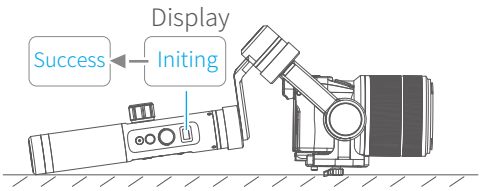

2 Place the gimbal on the table unmoved, and the gimbal automatically detect whether or not it is placed on a static flat surface, and then its initializing will start automatically showing "Initing" on the display, and "Success" will be displayed after the initializing has been successfully completed.

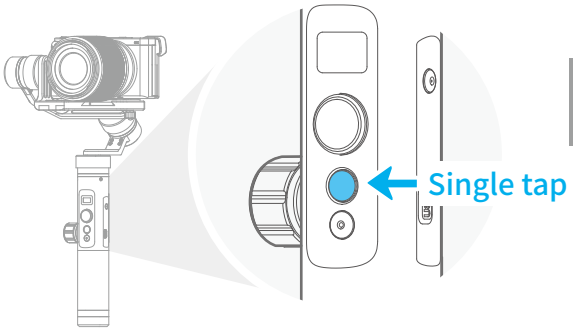

3 After the initialization is done, single tap the function button to wake up and return to the main interface.

NOTE: If the initialization is not successful for a long time, long press the function button to turn off the gimbal,restart it and then initialize.

6. Specifications

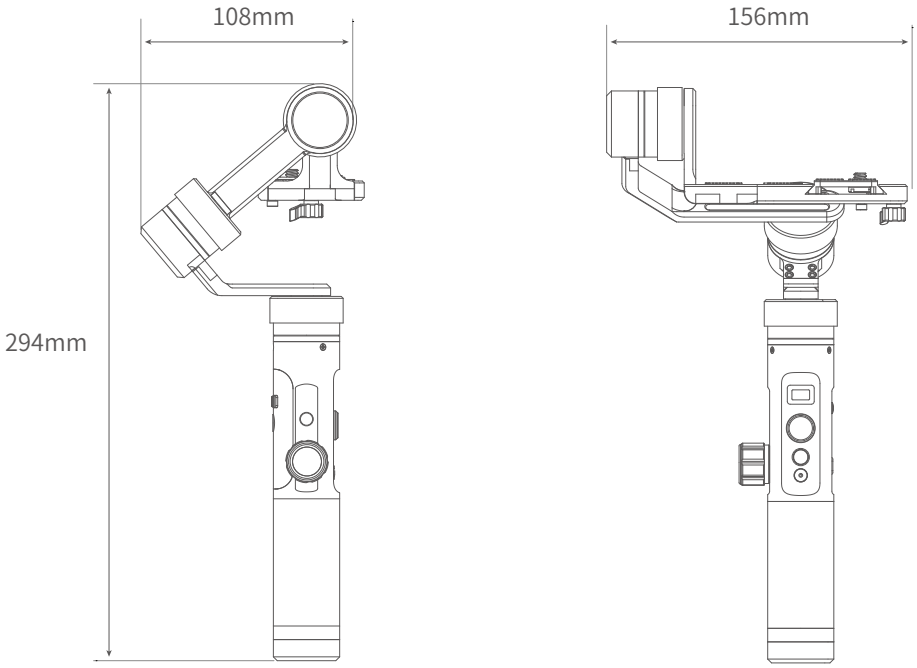

Specifications

Product Name	G6 Plus 3-Axis Stabilized Handheld Gimbal for Camera
Max. Tilting Range	260°
Max. Rolling Range	320°
Max. Panning Range	360°
Tilting Speed	2°/s ~ 75°/s
Panning Speed	3°/s ~ 150°/s
Operation Time	9 Hours
Weight	663g (Not including the battery, camera, camera lens, etc.)
Payload	800g (In center of gravity balanced state)
Compatible Cameras for Reference	Sony RX100 / Sony a6300 (16-50 or 28-70mm) / Sony a6500 (16-50 or 28-70mm) / Canon M10 (15-45mm) / Canon G3X , ect. Sony RX0 / GoPro HERO series sports cameras Fit for smartphone with smartphone adapter(Optional accessory)

This device complies with Part 15 of the FCC Rules. Operation is subject to the following two conditions: (1) this device may not cause harmful interference, and (2) this device must accept any interference received, including interference that may cause undesired operation.

Changes or modifications not expressly approved by the party responsible for compliance could void the user's authority to operate the equipment.

NOTE: This equipment has been tested and found to comply with the limits for a Class B digital device, pursuant to Part 15 of the FCC Rules. These limits are designed to provide reasonable protection against harmful interference in a residential installation. This equipment generates, uses instructions, may cause harmful interference to radio communications. However, there is no guarantee that interference will not occur in a particular installation. If this equipment does cause harmful interference to radio or television reception, which can be determined by turning the equipment off and on, the user is encouraged to try to correct the interference by one or more of the following measures:

-- Reorient or relocate the receiving antenna.

-- Increase the separation between the equipment and receiver.

-- Connect the equipment into an outlet on a circuit different from that to which the receiver is connected.

-- Consult the dealer or an experienced radio/TV technician for help.

Guilin Feiyu Technology Incorporated Company

Website: www.feiyu-tech.com **E-mail:** service@feiyu-tech.com **Tel:** +86(0)773 2320865

Due to software and hardware improvements, your actual product might differ from the descriptions and pictures in this user manual. You can get the latest user manual from the official website.

For more information, please visit our official website

DISCLAIMER

Prohibit any user for any illegal purpose. Users will be responsible for all behaviors of purchase and use products.

The Company assumes no liability for any risks related to or resulting from the debug and use of this product (including the direct, indirect or third-party losses).

For any unknown sources of using, we will not be at any services.

The updating and changes of product firmware and program may cause changes in function descriptions in this user manual, please read the instructions carefully before upgrading the firmware and use the corresponding user manual.

You can get the latest user manual from the official website: www.feiyu-tech.com

FeiyuTech reserves the right to amend this manual and the terms and conditions of use the gimbal at any time.