FeiyuTech

# VLOG pocket

Foldable Smartphone Gimbal

Quick Start Guide

EN V1.0

## Overview

*This product does not include the smartphone

VLOG pocket is a three-axis handheld gimbal suitable for mobile phones. It is small and foldable which can be folded into a pocket. The gimbal supports landscape and portrait shooting, which can also control phone shooting.

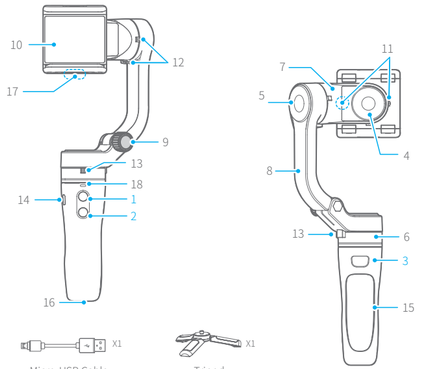


1. Function button
2. Shutter button
3. Shortcut button
4. Roll axis
5. Tilt axis
6. Pan axis
7. Cross arm
8. Vertical arm
9. Folding knob
10. Smartphone holder
11. Roll axis clamp
12. Tilt axis clamp
13. Pan axis clamp
14. Micro-USB port
15. Handle
16. 1/4 inch thread hole
17. Extend port
18. Status indicator

## User Guide

(1) Please fully charge the batteries before powering on the gimbal for the first time.
(2) If the power is too low, the red light will flash three times every five seconds, indicating you should charge it immediately.
(3) When not in use, turn off the gimbal.
(4) Unlock the three clamp before powering on the gimbal.
(5) Landscape to install the phone.

TIPS

### 1. Fold and unfold

**Unfold**
(1) Loosen the folding knob and tighten the knob after unfolding the vertical arm.
(2) Unlock the three axis clamp.

**Fold**
(1) Lock the three axis clamp.
(2) Loosen the folding knob, and then tighten the knob after folding the vertical arm.

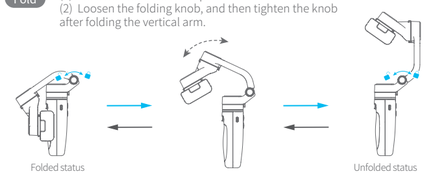


**Unlock / Lock the clamp**

Take the pan axis clamp for example.

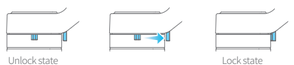


### 2. Charging

Connect the USB cable to charge. The indicator light is red when charging, and green when fully charged.

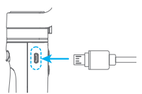

### 3. Camera Installation

It is recommended to remove the protective cover of the smartphone before installation and keep the extend port of the smartphone holder facing down.

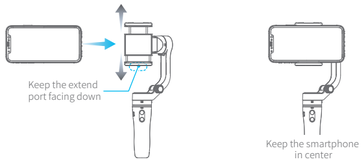


### 4. Power on / off

Unlock the three axis clamp before powering on the gimbal.
Turn on the smartphone only after it is installed securely.

**Power on :** Long press the function button and release it when you hear the tone. (Green light will change to blue)

**Power off :** Long press the function button and release it when you hear the tone. (The red light will turn off)

### 5. Landscape and portrait shot switching

Double click the function button to switch modes between landscape and portrait.

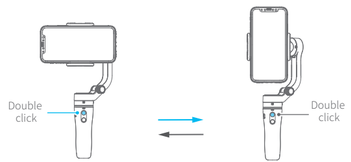


### Download the Feiyu ON App

* Requires iOS 9.0 or later, Android 6.0 or later.

iOS Version

Android Version

### Specifications

| | |
|---|---|
| Max. Tilting Range | 240° |
| Max. Rolling Range | 165° |
| Max. Panning Range | 330° |
| Operation Time | 5~8 Hours |
| Weight | 272g ( Not including the smartphone ) |
| Payload | 240g |
| Adapter smartphones | IPhone and Android phones ( The width of the phone is between 42~88mm ) |

### For More

Detailed Manual

Operation Tutorial

More Downloads


DISCLAIMER

Prohibit any user for any illegal purpose. Users will be responsible for all behaviors of purchase and use products.
The Company assumes no liability for any risks related to or resulting from the debug and use of this product (including the direct, indirect or third-party losses).
For any unknown sources of using, we will not be at any services.
The updating and changes of product firmware and program may cause changes in function descriptions in this user manual, please read the instructions carefully before upgrading the firmware and use the corresponding user manual.
You can get the latest user manual from the official website: www.feiyu-tech.com
FeiyuTech reserves the right to amend this manual and the terms and conditions of use the gimbal at any time.


For more information, please visit our official website: www.feiyu-tech.com
Due to software and hardware improvements, your actual product might differ from the descriptions and pictures in this user manual. You can get the latest user manual from the official website.

FCC regulatory conformance：

This device complies with Part 15 of the FCC Rules. Operation is subject to the following two conditions:

(1) This device may not cause harmful interference.

(2) This device must accept any interference received, including interference that may cause undesired operation.

**NOTE:** This equipment has been tested and found to comply with the limits for a **Class B** digital device, pursuant to part 15 of the FCC Rules. These limits are designed to provide reasonable protection against harmful interference in a residential installation.

This equipment generates uses and can radiate radio frequency energy and, if not installed and used in accordance with the instructions, may cause harmful interference to radio communications. However, there is no guarantee that interference will not occur in a particular installation. If this equipment does cause harmful interference to radio or television reception, which can be determined by turning the equipment off and on, the user is encouraged to try to correct the interference by one or more of the following measures:

- Reorient or relocate the receiving antenna.
- Increase the separation between the equipment and receiver.
- Connect the equipment into an outlet on a circuit different from that to which the receiver is connected.
- Consult the dealer or an experienced radio/TV technician for help

**NOTE:** The manufacturer is not responsible for any radio or TV interference caused by unauthorized modifications to this equipment. Such modifications could void the user's authority to operate the equipment.

## RF Exposure

This equipment complies with FCC radiation exposure limits set forth for an uncontrolled environment.