FeiyuTech

VLOG pocket 2

Foldable Smartphone Gimbal

Quick Start Guide

EN V1.1

FeiyuTech

Guilin Feiyu Technology Incorporated Company

For more information, please visit our official website www.feiyu-tech.com

E-mail: service@feiyu-tech.com Tel: +86 773 2320865

Due to software and hardware improvements, your actual product might differ from the descriptions and pictures in this user manual. You can get the latest user manual from the official website.

Overview

*This product does not include the smartphone

VLOG pocket 2 is a three-axis handheld gimbal for mobile phones. It is small and foldable which can be folded into a pocket. The gimbal supports landscape and portrait shooting, which can also control phone shooting.

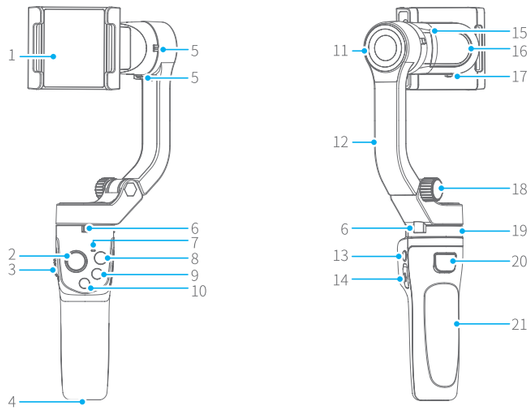

1. Smartphone holder
2. Joystick
3. Focus button
4. 1/4 inch thread hole
5. Tilt axis clamp
6. Pan axis clamp
7. Status indicator
8. Video button
9. Photo button
10. Function button
11. Tilt axis
12. Vertical arm
13. Power button
14. USB C port
15. Cross arm
16. Roll axis
17. Roll axis clamp
18. Folding knob
19. Pan axis
20. Trigger button
21. Handle (Built-in battery)

Download the Feiyu ON App

Scan the QR code to download the app, or search for "Feiyu ON" in the App Store or Google Play.

* Requires iOS 9.0 or above, Android 6.0 or above.

iOS Version Android Version

Detailed manual

Scan the QR code to get the latest user manual or download it from the official website.

https://www.feiyu-tech.com/vlog-pocket2/

*Follow the steps below to quickly experience the basic features of the product. Read the detailed manual for more usage of the product.

Tutorial

- The tutorial videos can be watched at FeiyuTech official website or scan the QR code on the right. https://www.feiyu-tech.com/play/
- Watch tutorials in video skill page on Feiyu ON.

User Guide

TIPS

(1) Unlock the three-axis clamp before powering on the gimbal.
(2) Please fully charge the battery before powering on the gimbal for the first time.
(3) Keep the smartphone holder in landscape to mount smartphone.
(4) If the power is too low, the red light will flash three times every five seconds , which indicating you should charge it immediately.
(5) When not in use, power off the gimbal.

Unlock / Lock the clamp

Take the pan axis clamp for example.

Unlock Lock

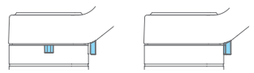

Unlock status Lock status

Fold and unfold

Unfold

(1) Loosen the folding knob and tighten the knob after unfolding the vertical arm.
(2) Unlock the three-axis clamp.

Fold

(1) Lock the three-axis clamp.
(2) Loosen the folding knob, and then tighten the knob after folding the vertical arm.

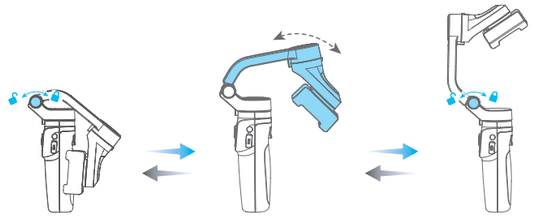

Smartphone installation

*It is recommended to remove the smartphone case before installation.

Pull the smartphone holder and put your smartphone in, keep the holder in the center of the smartphone. If the phone tilts to left or right, please hold the roll arm , slightly move the smarphone to oppsite side until paralleling to the ground.

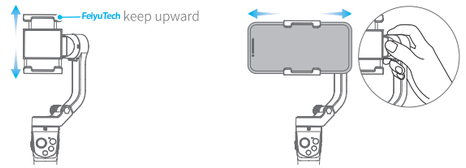

Power on / off

Before Powering on
(1)Unlock the three-axis clamp
(2)Mount the smartphone on properly

Power on / off: Long press the power button and release it when you hear the tone.

Landscape and portrait mode switching

Double click the function button or manually rotate the smartphone holder (according to the picture below) to switch between landscape and portrait mode.

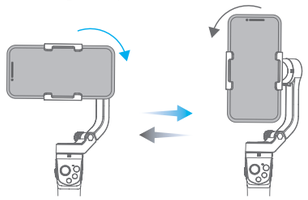

Kindly Reminder:
Do not make anti-clockwise rotation in landscape mode,Do not make clockwise rotation in portrait mode.

Common operations

Power button

Long press: Power ON/OFF
*Single tap: Enter/ quit shortcut menu①
*Double tap: Switch between Photo/ Video

Function button

Single tap: Switch among common working modes②
Double tap: Switch between landscape/ portrait mode
Triple tap: Enter standby mode/ wake up
Five tap: Initialize the gimbal (Single clik to wake up)

Photo button

Single tap: Take photo (Bluetooth connectivity is needed)
*Long press: Burst photos

Video button

Single tap: Start/ stop recording (Bluetooth connectivity is needed)

Trigger button

Press and hold: Lock (Release it to quit)
Double tap: Recenter
*Triple tap: Switch front and rear camera
Single tap first then press and hold: Fast follow mode (Release it to quit)

Tips: * means you need to connect gimbal with Feiyu ON App to achieve it.
①Can set pan mode, follow mode, all follow mode, etc.
②Can customize the working mode switch to in App shortcut menu.

Standard accessories

USB C Cable×1 Tripod×1 Portable bag×1

Specifications

Tilt Range	165°
Roll Range	323°
Pan Range	330°
Standby Time	9 Hours
Weight	272g
Payload	250g (After Balanced)
Adapter smartphones	iPhone and Android phones (The width of the phone is between 41~89mm)

Disclaimer

Thanks for using FeiyuTech product. The information in this document affects your safety and your legal rights and responsibilities. Read the entire document carefully to ensure proper configuration before use, Failure to read and follow instructions and warnings in this document may result in serious injury to yourself or others, or damage to your products or damage to other objects in the vicinity.

By using this product, you hereby signify that you have read this disclaimer and warning carefully and that you understand and agree to abide by the terms and conditions herein. You agree that you are solely responsible for your own conduct while using this product, and for any consequences thereof. You agree to use this product only for purposes that are proper and in accordance with all applicable laws, rules, and regulations, and all terms, precautions, practices, policies and guideline FeiyuTech has made and may make available. FeiyuTech accepts no liability for damage, injury or any legal responsibility incurred directly or indirectly from the use of product.

FeiyuTech will not provide any service for any product obtained from abnormal channels.

Notice

1.Make sure motor spinning is not blocked by external force when the product is power on.
2.The product DO NOT contact water or other liquid if the product is not mark waterproof or splash-proof. Waterproof and splash-proof product DO NOT contact sea water or other corrosive liquid.
3.DO NOT disassembly the product except marked detachable. It need send to FeiyuTech after-sales or authorized service center to fix it if you accidently disassembly and cause abnormal work. The relevant costs are borne by user.
4.Prolonged continuous operation may cause the product surface temperature to rise, please operate carefully.
5.DO NOT drop or strike the product. If the product is abnormal, contact FeiyuTech after-sales support.

Storage and Maintenance

1.Keep the product out of the reach of children and pets.
2.DO NOT leave the product near heat sources such as a furnace or heater. DO NOT leave the product inside of a vehicle on hot days.
3.Please storage the product in dry environment.
4.DO NOT overcharge or overuse the battery, otherwise it will cause damage to the battery core.
5.Never use the product when the temperature is too high or too low.

FCC regulatory conformance：

This device complies with Part 15 of the FCC Rules. Operation is subject to the following two conditions:

(1) This device may not cause harmful interference.

(2) This device must accept any interference received, including interference that may cause undesired operation.

NOTE: This equipment has been tested and found to comply with the limits for a **Class B** digital device, pursuant to part 15 of the FCC Rules. These limits are designed to provide reasonable protection against harmful interference in a residential installation.

This equipment generates uses and can radiate radio frequency energy and, if not installed and used in accordance with the instructions, may cause harmful interference to radio communications. However, there is no guarantee that interference will not occur in a particular installation. If this equipment does cause harmful interference to radio or television reception, which can be determined by turning the equipment off and on, the user is encouraged to try to correct the interference by one or more of the following measures:

- Reorient or relocate the receiving antenna.
- Increase the separation between the equipment and receiver.
- Connect the equipment into an outlet on a circuit different from that to which the receiver is connected.
- Consult the dealer or an experienced radio/TV technician for help

NOTE: The manufacturer is not responsible for any radio or TV interference caused by unauthorized modifications to this equipment. Such modifications could void the user's authority to operate the equipment.

RF Exposure

This equipment complies with FCC radiation exposure limits set forth for an uncontrolled environment.