Product Overview

* The showing G360 camera is only for reference

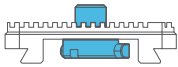

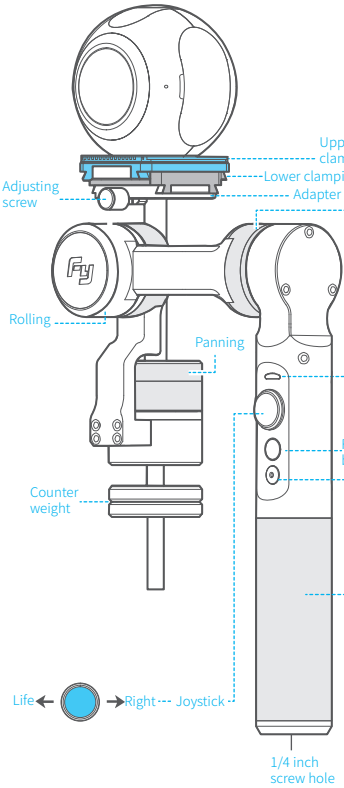

Indicator Status	Mode / Status
Blue light flashes once	Panning mode
Blue light flashes for three times	Stand-by
Blue light constant on	Lock mode / Initializing
Blue light keeps flashing	Initialization failure / Malfunction
Red light flashes three times	Low battery
Red light keeps flashing	Entering stand-by / Entering power off

Function button

You can using the function button to switch the working mode, power on or power off the gimbal. Please refer to chapter "Modes / Functions".

Self-timer button

Long press the selfie button, the lens will rotate 180 °, release to restore.

Parts List

USB cable X1

Batteries (Type:22650)X1

20g counter weight

30g counter weight

40g counter weight

100g counter weight

User Guide

Attention !

(1) Please install the smartphone before powering on the gimbal
(2) Please turn off the power when the gimbal is not in use, then remove the smartphone

1 Charging

Please make sure the battery was fully charged before you power on the gimbal first time.

Option 1: Charging with micro USB cable.

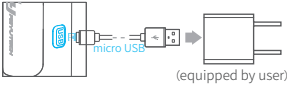

Option 2: remove the battery and charge the battery with charger(equipped by user).

2 Download APP

Download "Feiyu ON" and install it.

(1) iOS version:

(2) Android version:

① scan to download

② Google play

3 Install the battery

Remove the handle and insert one 22650 battery into it.

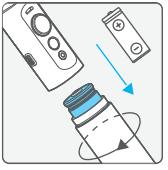

4 Install the Camera

(1) Align the camera mounting hole with the upper slide center slot and secure it tight by the screws.

(2) Place the upper slider with the camera on the lower slider and tighten screw.

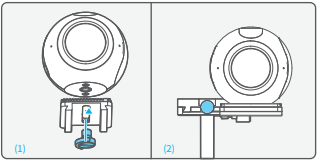

5 Camera balance adjustment

(1) Adjust the horizontal center of gravity with the counterweight

a.Place a counterweight of a similar weight to the camera on the gimbal and tighten the counterweight in the opposite direction .

b.Ajust as the following to get the best balance.

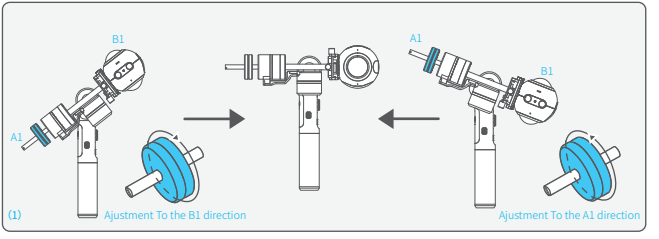

(2) Use the up and down sliders to adjust the vertical center of gravity

Tip: The screw can be twisted to adjust, please do not twist the adjustment screw out of the slider.

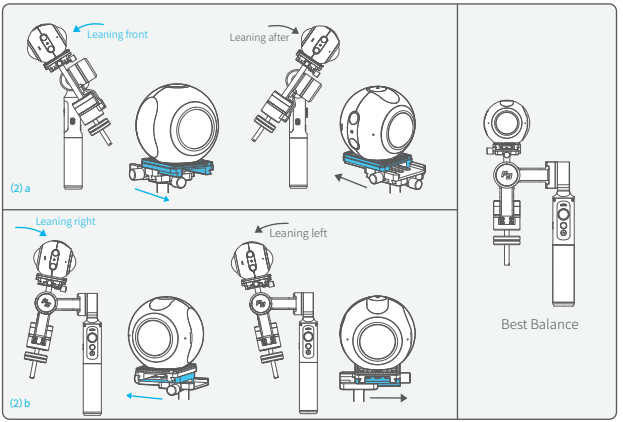

6 Power on / off

Power On: Press and hold function button until the green light is on.
Power Off: Press and hold function button until the red light changes from quick flashing to constant.

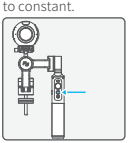

Attention: Make sure the camera is secure before power on the Gimbal.

In case of low battery, the indicator will light red and flash 3 times every 5 seconds. Please charge G360 or replace the battery.

7 Connect to APP

Start the app on your smartphone,follow the instructions to connect the smartphone with gimbal via Bluetooth.

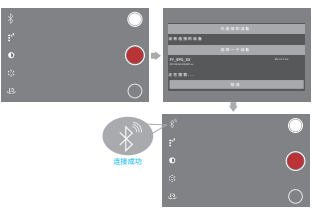

Modes / Functions

Working Modes

Panning Mode

Hold the tilting and rolling direction of camera lens, camera lens will move along with handle moving.

* The gimbal will work on Panning Mode after power on.

Panning and Tilting Mode

Hold the rolling direction of camera lens, camera lens will move along with handle moving.

Lock Mode

Hold the direction of camera lens.

Other Functions

Reset

Reset to power on status.

Stand-by

Shutdown all motors.

Mode / Function Operation Instructions

Function Button	Function	Explanation
Single tap	Panning Mode / Lock Mode	Single tap to switch between panning mode and lock mode
Quadruple tap	Reset	Reset the tilting axis of the gimbal to initial orientation and initial mode
Long press until the red light flashes quickly	Standby	Single tap again to awake the gimbal, or triple tap to initialize the gimbal

Firmware Upgrade

(1) Option 1: connect the gimbal with PC via micro USB cable, and then upgrade the firmware.

Please visit the official website www.feiyu-tech.com to download the relevant programs for upgrading, including USB driver, firmware upgrade software and product firmware,and install the relevant software, decompress the firmware files for standby application.

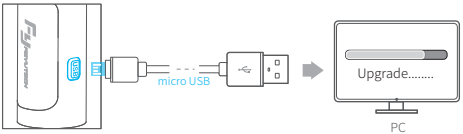

(2) Option 2: connect the gimbal with Smarphone via bluetooth, and then upgrade the firmware.

Gimbal initialization

You can initialize your gimbal when:

(1) camera is not level
(2) haven been used for long time
(3) big variation of ambient temperature

Adjusting steps:

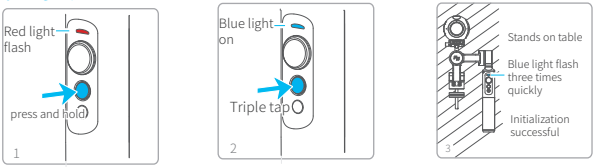

Parameters

Titling Angle	360°	Titling Increments	min 2°/s max 75°/s
Rolling Angle	100°	Panning Increments	min 3°/s max 150°/s
Panning Angle	360°	Usage time	6 Hours
Counter weight	20g, 30g, 40g, 100g		
Weight	360g（Not including battery, camera or counter weight）		
Adaption	Camera with 1/4 inch screw hole, weight 100~300g.		

Unit: mm

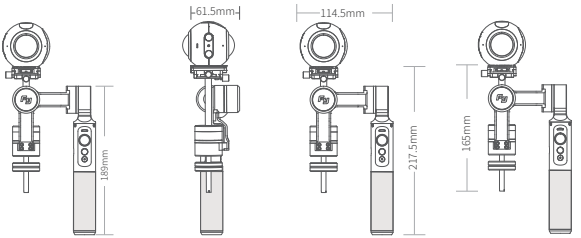

DISCLAIMER

Prohibit any user for any illegal purpose. Users will be responsible for all behaviors of purchase and use products.

The Company assumes no liability for any risks related to or resulting from the debug and use of this product (including the direct, indirect or third-party losses).

For any unknown sources of using, we will not be at any services.

The updating and changes of product firmware and program may cause changes in function descriptions in this user manual, please read the instructions carefully before upgrading the firmware and use the corresponding user manual.

You can get the latest user manual from the official website: www.feiyu-tech.com

Feiyu Tech reserves the right to amend this manual and the terms and conditions of use the product at any time.

Attention

- Please correctly assemble the gimbal in accordance with the diagram
- Please install the camera before powering on the gimbal
- When the gimbal is not in use or placed on the table, please ensure it is powered off

Instruction Manual
V 1.0

FEIYUTECH

G360

G360 Panoramic Camera Gimbal

Compatible with Samsung gear 360/Kodak pixpro sp360/Kodak pixpro sp360 4k/Sony FDR-X3000 etc.

GuiLin FeiYu Technology Incorporated Company

FEIYUTECH

Create More Possibilities

For more information, please visit our official website: www.feiyu-tech.com
Support Email: service@feiyu-tech.com

This product is due to follow-up hardware and software updates may occur description of the introduction does not match the actual product features. You can get the latest user manual from the official website

www.feiyu-tech.com

NOTE: This equipment has been tested and found to comply with the limits for a Class B digital device, pursuant to part 15 of the FCC Rules. These limits are designed to provide reasonable protection against harmful interference in a residential installation. This equipment generates uses and can radiate radio frequency energy and, if not installed and used in accordance with the instructions, may cause harmful interference to radio communications. However, there is no guarantee that interference will not occur in a particular installation. If this equipment does cause harmful interference to radio or television reception, which can be determined by turning the equipment off and on, the user is encouraged to try to correct the interference by one or more of the following measures:

- Reorient or relocate the receiving antenna.

- Increase the separation between the equipment and receiver.

-Connect the equipment into an outlet on a circuit different from that to which the receiver is connected.

-Consult the dealer or an experienced radio/TV technician for help

Changes or modifications not expressly approved by the party responsible for compliance could void the user's authority to operate the equipment. This device complies with Part 15 of the FCC Rules. Operation is subject to the following two conditions:

(1) this device may not cause harmful interference, and

(2) this device must accept any interference received, including interference that may cause undesired operation.