FEIYUTECH

User Manual
V 1.0

Smart Remote

Smart Remote

Smart Remote can control the gimbal to switch work mode and the direction of lens.

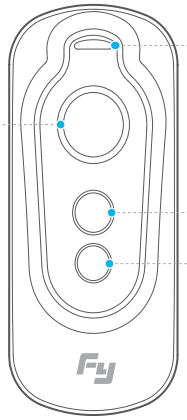

Indicator Status (Hint Message)

Joystick
(Direction Control)

Function Button

Power on:
Long press function button and release it until the blue light is on
Power off:
Press and hold until the indicator turn red

Self-timer Button

Long press the self-timer button, the lens will rotate 180 °,release to restore.
Only applicable for G5.

*Switch Gimbal' s work mode, please refer to the corresponding user manual of gimbal.

Connect Smart Remote with gimbal for the first time

Step 1 Power on the gimbal you want to connect (take G5 as an example)

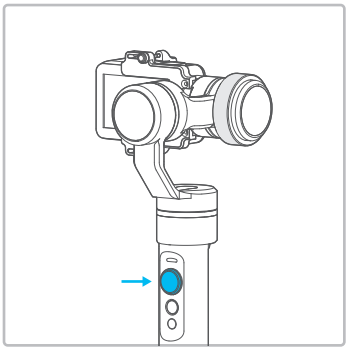

Press and hold the function button, if the indicator lights red and then turn to green, this means gimbal is working normally.

Step 2 Power on the Smart Remote

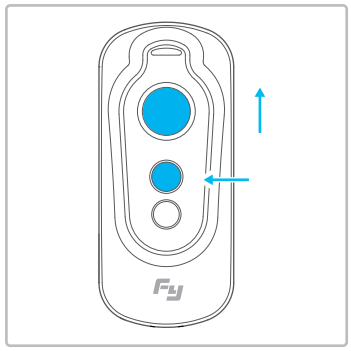

Push the joystick up and hold, then press and hold the function button. The indicator on smart remote light blue and then turn to green,means smart remote is paired with the gimbal.

*If the smart remote has paired with gimbal,press and hold the function button,the smart remote will connect with the paired gimbal automatically.

Step 3 Connection status

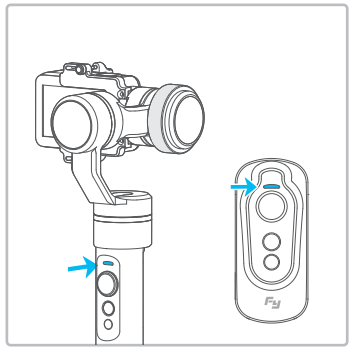

If connected, the blue light and green light will flash alternately

If you need to connect to another gimbal, please repeat the above steps

Charging

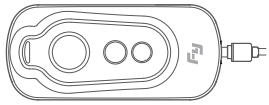

Indicator

Charging —— Red light
Finish —— Green light

*The indicator will flashing red light if low battery.

Parameters

INPUT DC:5V/1A	Charging Time ≤2h	Usage Time ≥4h	Battery Capacity 250mAh

DISCLAIMER

Prohibit any user for any illegal purpose. Users will be responsible for all behaviors of purchase and use products.

The Company assumes no liability for any risks related to or resulting from the debug and use of this product (including the direct, indirect or third-party losses).

For any unknown sources of using, we will not be at any services.

The updating and changes of product firmware and program may cause changes in function descriptions in this user manual, please read the instructions carefully before upgrading the firmware and use the corresponding user manual.

You can get the latest user manual from the official website: www.feiyu-tech.com

Feiyu Tech reserves the right to amend this manual and the terms and conditions of use the product at any time.

Create More Possibilities

For more information, please visit our official website: www.feiyu-tech.com
Support Email: service@feiyu-tech.com
Scan to download the latest user manual

FCC STATEMENT :

This device complies with Part 15 of the FCC Rules. Operation is subject to the following two conditions:
(1) This device may not cause harmful interference, and
(2) This device must accept any interference received, including interference that may cause undesired operation.
Warning: Changes or modifications not expressly approved by the party responsible for compliance could void the user's authority to operate the equipment.

NOTE: This equipment has been tested and found to comply with the limits for a Class B digital device, pursuant to Part 15 of the FCC Rules. These limits are designed to provide reasonable protection against harmful interference in a residential installation.
This equipment generates uses and can radiate radio frequency energy and, if not installed and used in accordance with the instructions, may cause harmful interference to radio communications. However, there is no guarantee that interference will not occur in a particular installation. If this equipment does cause harmful interference to radio or television reception, which can be determined by turning the equipment off and on, the user is encouraged to try to correct the interference by one or more of the following measures:

Reorient or relocate the receiving antenna.

Increase the separation between the equipment and receiver.

Connect the equipment into an outlet on a circuit different from that to which the receiver is connected.

Consult the dealer or an experienced radio/TV technician for help.

RF warning statement:

The device has been evaluated to meet general RF exposure requirement. The device can be used in portable exposure condition without restriction.