FEIYUTECH

VIMBLE 2

Vimble 2 3-Axis Stabilized Handheld Gimbal for Smartphone

Guilin Feiyu Technology Incorporated Company

User Manual EN V 1.0

Product overview

1. Structure

■ Smartphone shown in illustrations is for reference only

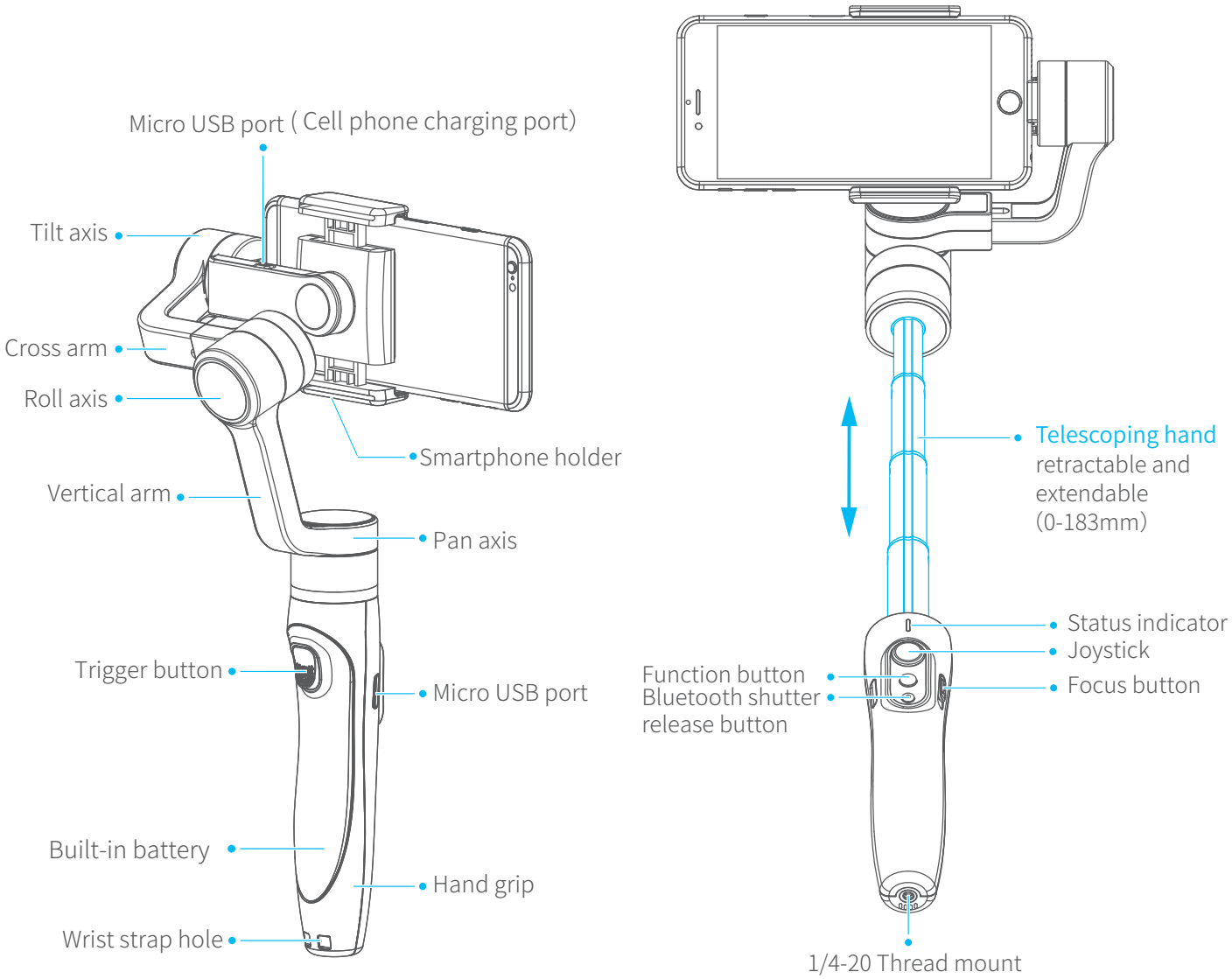

2、Included items

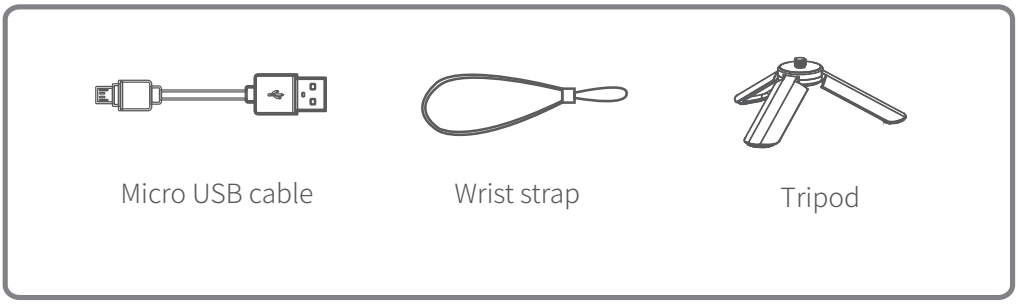

Operation guide

1. Gimbal charging

■ Please fully charge the battery before powering on the gimbal for the first time

Charging with Micro USB cable Indicator is red in charging status, and becomes green when battery full.

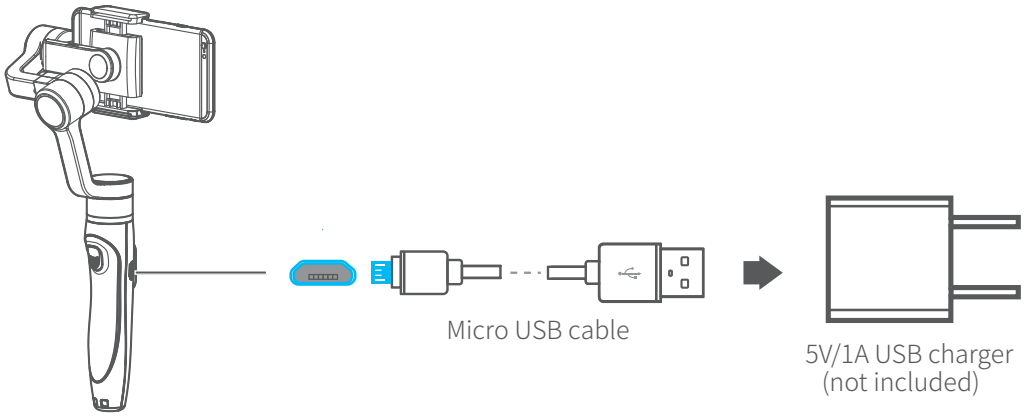

⚠ (1) Please install the smartphone before powering on the gimbal.
(2) When not in use, turn off the gimbal and then remove the smartphone.

2. Smartphone charging

Charge the phone via cable and choose the corresponding cable according to charging port.

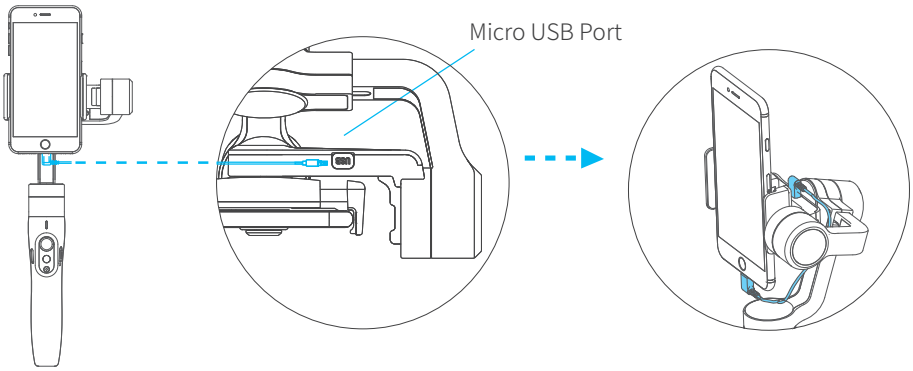

3. Insert smartphone

■ It' s recommended to remove your smartphone protective case.
■ Smartphone holder width range : 57-84mm.

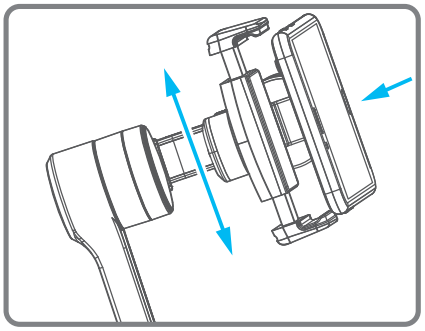

Place smartphone in holder so that the phone is snug against the back of the holder.

■ If the smartphone is unbalanced after being mounted, refer to the following steps to make adjustment.

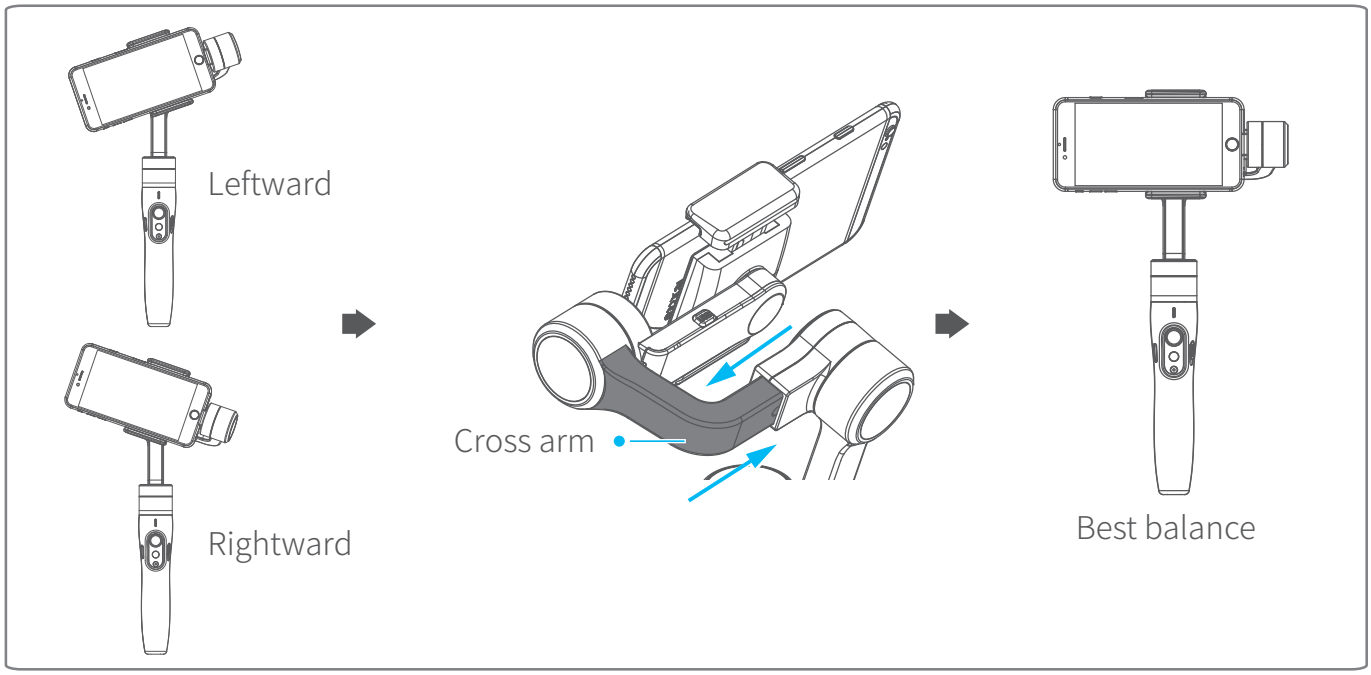

(1) If smartphone tilts to the left,pull cross arm out to the right until phone is horizontal.
(2) If smartphone tilts to the right,push cross arm in to the left until phone is horizontal.

4.Smartphone rotation

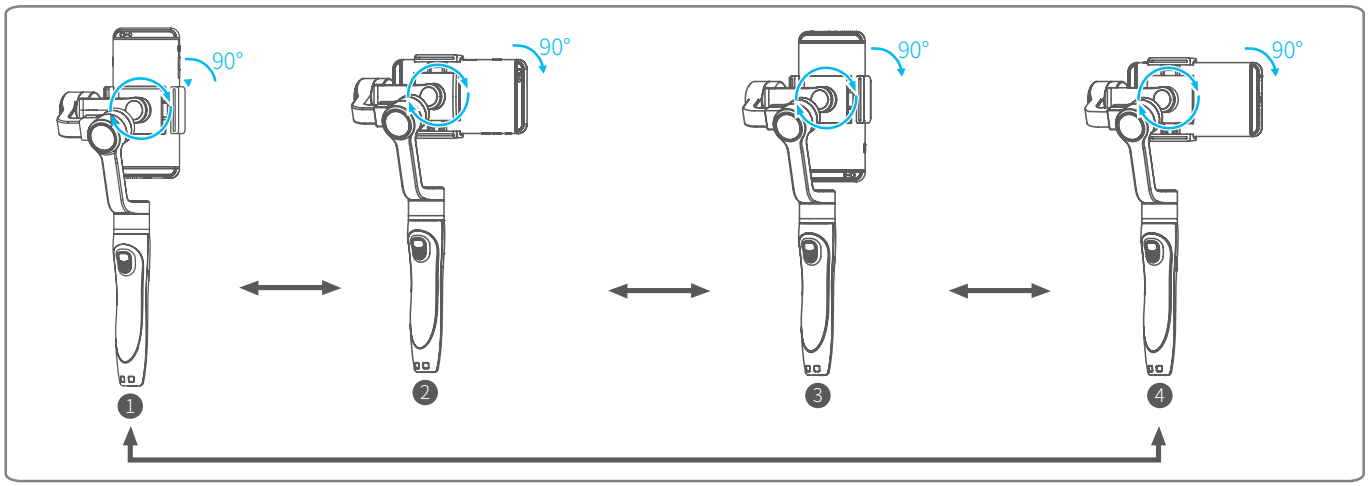

Tip:

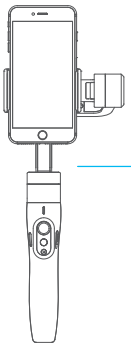

Load weight:
100~200g

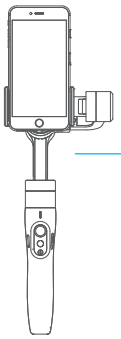

Load weight:
≤130g

5. Power on / off

- Make sure the smartphone is secure before powering on the gimbal.
- When battery is low, the status indicator will blink red three times every 5 seconds. Please charge gimbal .

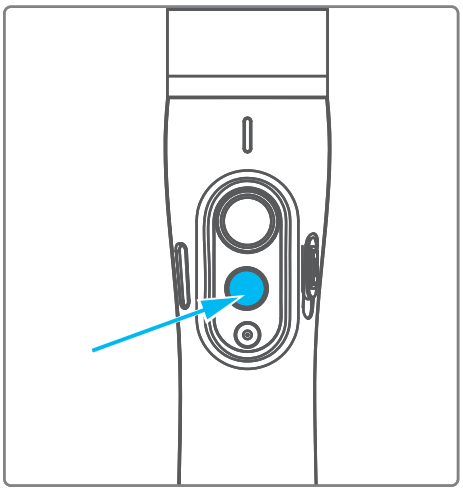

Power on：press and hold the function button until the status indicator turns green and gimbal beeps.

Power off：press and hold the function button until the status indicator changes from a flashing red to a solid red light and gimbal beeps.

Functions modes

Operation method

Status Indicator Explanation

- The current mode of the gimbal can be identified by the indicator status.

Indicator status	Mode / Status
Blue light flashes once	Pan mode
Blue light flashes twice	Follow mode
Constant Blue light	Lock mode / gimbal initializing / motion control mode
Blue light keeps flashing	Initialization failure/ malfunction
Red light flashes three times	Low power
Red light keeps flashing	Gimbal powering off

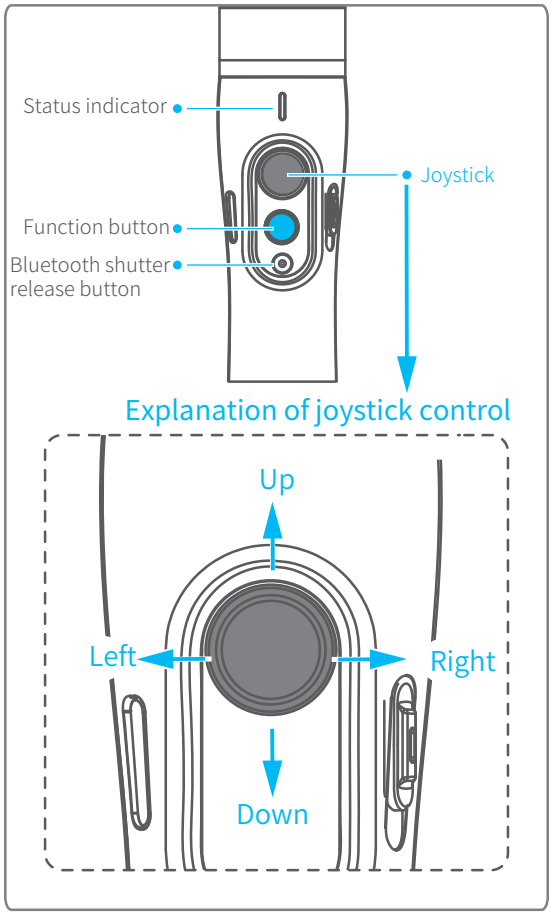

Bluetooth shutter release button

By connecting bluetooth or Vicool App, you can operation as follow

Button	Mode / Indicator status
Single click	Photo / Status indicator flashes green once
Press & Hold	Video / Status indicator remains solid green during recording

Troubleshooting: if the gimbal fails to connect to the Vicool App, power off the gimbal. Press and hold both the bluetooth shutter release button and the function button to reset the bluetooth connection.

■ The firmware upgrade may occur manual operation function and the actual product features do not match. Please get the latest version manual on the official website.

Function button	Function	Explanation
Single click	Panning Mode / Lock Mode	Single tap to switch between panning mode and lock mode
Double clicks	Follow mode	In the follow mode, the joystick is pushed to the left / right , to push and control the angle is -30 ° ~ + 30 °,push it up ward or down ward to realize pitching control.
Triple clicks	Switching camera lens	It needs to be used with Vicool APP
Four clicks	Motion Control mode	Both the panning and tilting directions can be rotated
Five clicks	Initialization	After the initialization succeeds or fails, you can click the function button to wake up the gimbal
Trigger button	**Function**	**Explanation**
Press & Hold	Temporary Lock	In the pan mode or follow mode, holding the trigger button temporarily locks panning and tilting until released
Double clicks	Reset to default	Centers the camera away from the user on all 3 axes (pan, tilt and roll) and switches back to the default pan mode
Focusing button	**Function**	**Explanation**
Sliding up-down	Adjust focus	Adjust field-of-view (FOV)(It needs to be used with Vicool APP)

Modes

Pan mode(Default mode)——The rolling and tilting direction are fixed, and the smartphone moves according to the hand movement direction of the user.

Follow mode——The rolling direction is fixed, and the smartphone moves according to the hand movement direction of the user.

Lock mode——The orientation of the smartphone is fixed.

Reset——Return to pan mode, all to return to default.

Manual Lock

Smartphone can be manually positioned while in lock mode , follow mode or pan mode. Both the pan and tilt can be manually set.

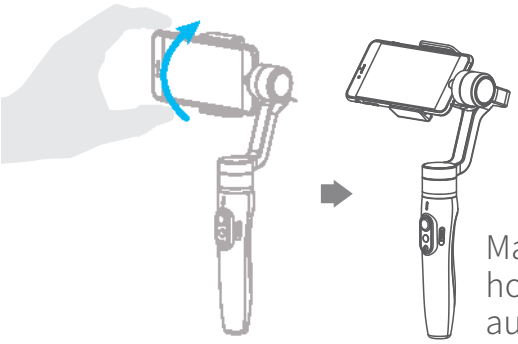

Manually move smartphone to desired position, and hold for half a second.New tilt and/or pan positions are automatically saved.

Motion Control Mode

The gimbal can easily create constant speed moves by using the motion control mode. This mode can be used for recording both regular video and timelapse photography. For best results, attach gimbal to the FeiyuTech tripod, or other tripod, to keep it completely still.

1.Set motion speed in Vicool App

To set the motion speed, connect to the Vicool App and select desired speed from the motion control option in the settings menu.

Motion control speed reference table

Vimble2 Rotation speed												
12 seconds / turn	18 seconds / turn	24 seconds / turn	30 seconds / turn	1 minute / turn	2 minutes / turn	4 minutes / turn	8 minutes / turn	15 minutes / turn	30 minutes / turn	1 hour /turn (default)	4 hours / turn	8 hours / turn

2.Enter motion control mode by clicking the function button 4 times

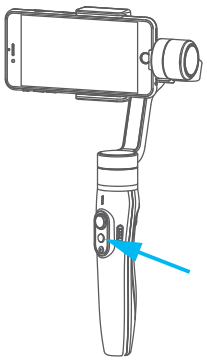

3.Set rotation start position

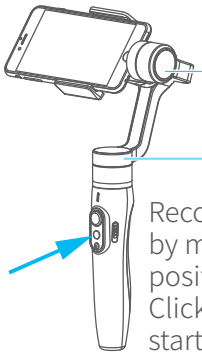

Record the first position (rotation start position) by manually moving smartphone to desired position. Hold in position for half a second. Click the function button to record rotation start position.

4.Set rotation end position

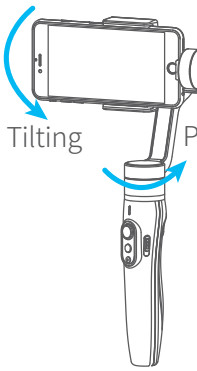

Record the second position (rotation end position) by manually moving smartphone to desired position. Hold in position for half a second. Click the function button to record rotation end position.

5.The gimbal is motion control from rotation start position to rotation end position

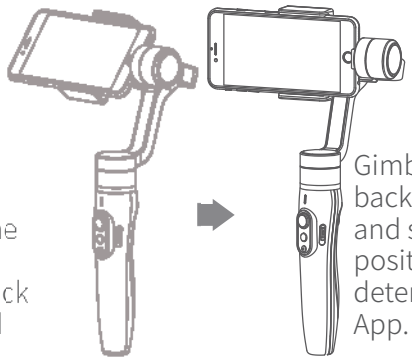

Gimbal will automatically move back to rotation start position and start moving to rotation end position at a constant speedas determined by user in the Vicool App.

Exit operations:

1.Gimbal automatically exits motion control mode once move completes.
2.Click the function button to exit the motion control mode during automatic rotation and reset the gimbal.
3.Enter the motion control mode or motion control setting, double click the trigger button to exit the motion control mode and reset the gimbal.

Gimbal Initialization

Initialize gimbal when:

(1) Smartphone fails to remain level. (2) Gimbal has no been used for a long period of time.
(3) Gimbal is used in extreme temperature variations.

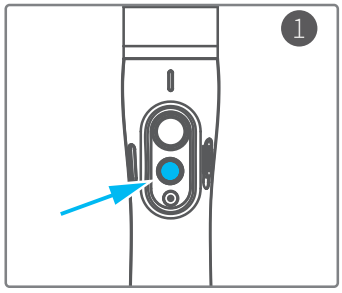

Click the function button five times. Themotors will stop working. Status indicatorturns solid blue.

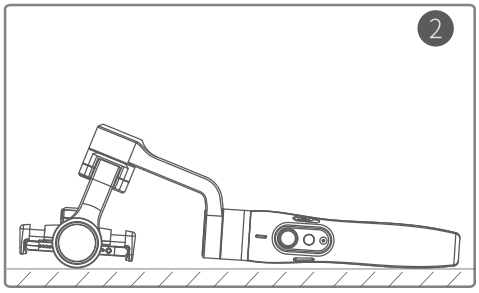

Place the gimbal on a flat, horizontal surface. The gimbal will automatically initialize after a few seconds detecting no movement. The blue light will flash three times to indicate end of initialization.

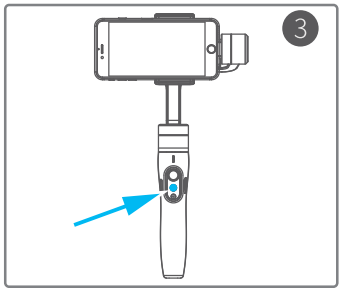

After the initialization is successful, click the function button to wake up.

Note: if the initialization is not successful, click the function button to wake up. restart initialization process.

Download App and firmware upgrade

1. Download App

Android version

iOS version

(1) Android users please use browser QR code scan plug-in to download; iOS users scan the QR code to download;

(2) iOS users please use App Store to search for “Vicool” to download; Android users please use Google Play, 360 Mobile Assistant, wandoujia.com to search for “Vicool” to download or visit the official site: www.feiyu-tech.com to download.

2. Firmware upgrade

Connect the gimbal to the Vicool App, to upgrade the firmware though the App.

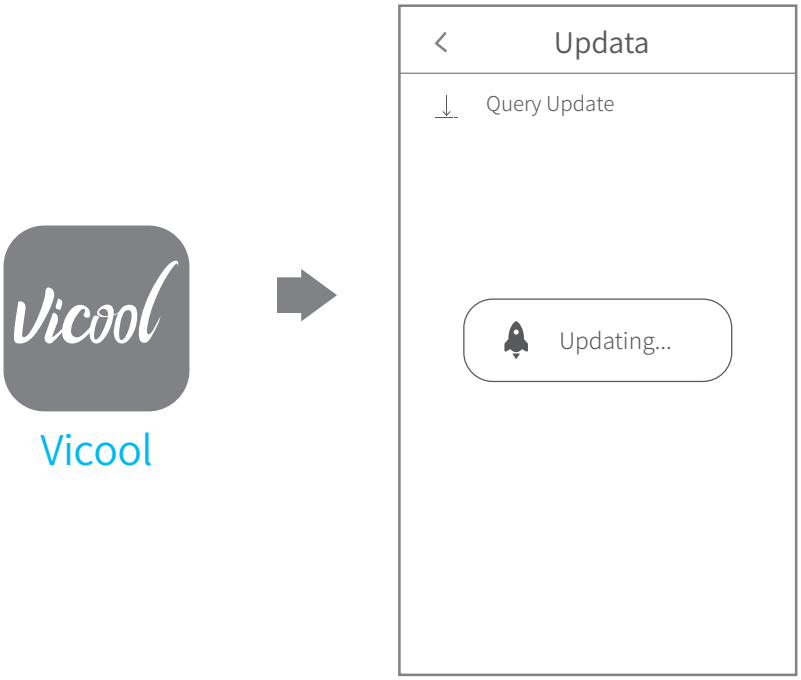

Technical Specifications

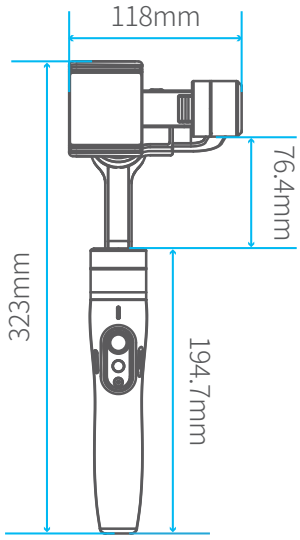

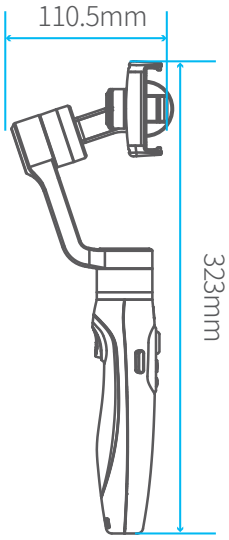

Max. tilting range	320°	Load weight	210g
Max. rolling range	320°	Charging Time	2 hours
Max. panning range	320°		
Operation time	5 hours		
Adaption phone	iPhone series/HUAWEI P9、MI 5、MEIZU MX6、SANXING S7 etc Android series phone or other smartphones (57-84mm)		
Weight	428g (not including smartphone)		

DISCLAIMER

Any user for illegal purpose prohibited. Users are responsible for use products.

The Company assumes no liability for any risks related to or resulting from the debug and use of this product (including direct, indirect or third-party losses).

For any unknown sources of using, we will not be at any services.

Updating and changes of product firmware and program me may cause changes in function descriptions in this user manual, please read the instructions carefully before upgrading the firmware and use the corresponding user manual.

You can get the latest user manual from the official website: www.feiyu-tech.com

FeiyuTech reserves the right to amend this manual and the terms and conditions of use the gimbal at any time.

Attention

- Please correctly assemble the gimbal in accordance with the diagram.
- Please install the smartphone before turning on the gimbal.
- When the gimbal is not in use or placed on the table, please ensure it is powered off.

FCC ID: 2AHW7SMVMBL

Model name: Vimble 2 3-Axis Stabilized Handheld Gimbal for Smartphone

Model No.: Vimble 2

Changes or modifications not expressly approved by the party responsible for compliance could void the user's authority to operate the equipment。

Note: This equipment has been tested and found to comply with the limits for a Class B digital device, pursuant to part 15 of the FCC Rules. These limits are designed to provide reasonable protection against harmful interference in a residential installation. This equipment generates, uses and can radiate radio frequency energy and, if not installed and used in accordance with the instructions, may cause harmful interference to radio communications. However, there is no guarantee that interference will not occur in a particular installation. If this equipment does cause harmful interference to radio or television reception, which can be determined by turning the equipment off and on, the user is encouraged to try to correct the interference by one or more of the following measures:

—Reorient or relocate the receiving antenna.

—Increase the separation between the equipment and receiver.

—Connect the equipment into an outlet on a circuit different from that to which the receiver is connected.

—Consult the dealer or an experienced radio/TV technician for help.

This device complies with Part 15 of the FCC rules. Operation is subject to the following two conditions: 1) this device may not cause harmful interference, and 2) this device must accept any interference received, including interference that may cause undesired operation.

Guilin Feiyu Technology Incorporated Company

Website: www.feiyu-tech.com **E-mail:** service@feiyu-tech.com **Tel:** +86(0)773 2320865

Due to software and hardware improvements, your actual product might differ from the descriptions and pictures in this user manual. You can get the latest user manual from the official website.

For more information, please visit our official website