Wearable Antenna Assembly

User Manual

Caution: Federal law restricts this device to sale by or on the order of a physician.

Wearable Antenna Assembly Programmer Kit
(LBRD-915-2K)

Wearable Antenna Assembly Programmer
(LBRD-915-2A)

EXPLANATION OF SYMBOLS ON PRODUCT OR PACKAGE

Refer to the appropriate product for symbols that apply.

Symbol	English – EN
REF	Device reference identification
LOT	Lot number
QTY	Quantity of product included in package
	Consult instructions for use
	Do not reuse
STERILIZE	Do not resterilize
	Do not use if package is damaged
	Store in a cool, dark, dry place
	Caution
	Warning
MR	MR Conditional
MR	MR Unsafe
	Use by
	Manufacturing date
	Manufacturer
Length	Device length
STERILE EO	Sterilization: ethylene-oxide gas
EC REP	European Authorized Representative
AU REP	Australian Sponsor
	Temperature limits

TABLE OF CONTENTS

EXPLANATION OF SYMBOLS ON PRODUCT OR PACKAGE 2

HOW TO USE THIS MANUAL 4

INDICATIONS FOR USE 4

SAFETY INFORMATION 5

CONTRAINDICATIONS 5

WARNINGS 6

PRECAUTIONS 11

ADVERSE EVENT SUMMARY 14

PARTS OF YOUR STIMULATION SYSTEM 15

OVERVIEW OF THE WAA PROGRAMMER 16

OVERVIEW OF THE USER CONTROLS 17

POSITIONING THE WAA PROGRAMMER 18

TURNING THE WAA PROGRAMMER "ON" OR "OFF" 19

STARTING STIMULATION FOR THE STIMULATOR 19

SELECTING A STIMULATION PROGRAM 20

INCREASING OR DECREASING AMPLITUDE 21

MAINTENANCE 22

BATTERY CHARGING 22

CLEANING AND CARE PRECAUTIONS 24

SAFETY AND TECHNICAL CHECKS 24

WAA PROGRAMMER DISPOSAL 24

PATIENT IDENTIFICATION CARD 24

WHEN TO CALL YOUR CLINICIAN 25

SPECIFICATIONS 26

WIRELESS INFORMATION 27

TROUBLESHOOTING 29

CONTACT INFORMATION 31

HOW TO USE THIS MANUAL

This manual will help you understand how to use and care for your neurostimulator system. It also provides you with warnings and precautions you should know about. You should discuss with your clinician any questions or concerns you have after reading this manual. Please refer to the Freedom Spinal Cord Stimulator (SCS) System Product Safety Guide for EMC related safety information.

This device complies with Part 18 of the FCC Rules. Per FCC 18.213, See Warnings section in this document for the interference potential of the device and methods for correcting interference. See Maintenance section in this document for the instructions on system maintenance.

Per FCC 15.21, changes or modifications not expressly approved by the party responsible for compliance could void the user's authority to operate the equipment.

Per FCC 15.19(a)(3) and (a)(4) This device complies with part 15 of the FCC Rules. Operation is subject to the following two conditions: (1) This device may not cause harmful interference, and (2) this device must accept any interference received, including interference that may cause undesired operation. FCC ID 2AHXALBRD2R4.

INDICATIONS FOR USE

The Freedom Spinal Cord Stimulator (SCS) System is intended as the sole mitigating agent, or as an adjunct to other modes of therapy used in a multidisciplinary approach for chronic, intractable pain of the trunk and/or lower limbs, including unilateral or bilateral pain. The Freedom-8A Trial Lead Kit is only used in conjunction with the Freedom-8A Stimulator Receiver Kit, and the Freedom-4A Trial Lead Kit is used for either the Receiver Kit Freedom-4A Stimulator or the Receiver Kit Freedom-8A Stimulator. The trial devices are solely used for trial stimulation (no longer than 30 days) to determine efficacy before recommendation for a permanent (long term) device.

SAFETY INFORMATION

CONTRAINDICATIONS

- **Poor surgical risks –** Spinal cord stimulators should not be used on patients who are poor surgical risks or patients with multiple illnesses or active general infections. This includes patients who need anticoagulation therapy that cannot be temporarily halted to accommodate the implantation procedure.
- **Pregnancy –** Safety and effectiveness of the Freedom SCS System for use during pregnancy and nursing have not been established.
- **Inability to operate System –** Spinal cord stimulators should not be used on patients who are unable to understand or operate the System.
- **Exposure to shortwave, microwave, or ultrasound diathermy –** Diathermy should not be operated within the vicinity of a patient implanted with a Freedom Stimulator or when wearing the Wearable Antenna Assembly Programmer (WAA). The energy from diathermy can be transferred through the stimulator or WAA Programmer and cause tissue damage, resulting in severe injury.
- **Implanted cardiac systems –** Patients who have implanted cardiac systems should not use the Freedom SCS System. Electrical pulses from the Freedom SCS System may interact with the sensing operation of an implanted cardiac system, causing the cardiac system to respond inappropriately.
- **Occupational exposure to high levels of non-ionizing radiation that may interfere with therapy –** Users who regularly work in environments with elevated levels of non-ionizing radiation should not be implanted with the Freedom SCS System. The energy in high-level areas can be transferred through the stimulator and cause tissue damage, resulting in severe injury. Examples of environments having high level non-ionizing radiation includes radio or cell phone transmission stations, facilities using radiofrequency heat sealers or induction heaters, electric power infrastructure controlled environments (i.e. step down transformers or high voltage power lines).

WARNINGS

Electromagnetic interference (EMI) – EMI is a field of energy generated by equipment found in the home, work, medical or public environments. EMI that is very strong can interfere with System. The device includes features that provide protection from EMI. Most electrical device and magnets encountered in a normal day will not affect the operation of the System. However, strong sources of EMI could result in the following:

- Serious patient injury resulting from heating of the implanted device and damage to surrounding tissue.
- System damage, resulting in a loss of, or change in, symptom control and requiring additional surgery.
- Operational changes to the WAA Programmer. This may cause either external device to turn on, turn off, or to reset to factory settings. If this occurs, the WAA Programmer need to be reprogrammed.
- Unexpected changes in stimulation, causing a momentary increase in stimulation or intermittent stimulation. Some patients have described as a jolting or shocking sensation. Although the unexpected change in stimulation could feel uncomfortable, it does not damage the device or cause a patient direct injury. In rare cases, as a result of the unexpected changes in stimulation, patients have fallen down and been injured.

If you suspect that your Freedom SCS System is being affected by EMI then you should:

- Immediately move away from the equipment or object.
- Remove the external transmitting device (WAA Programmer) from the vicinity.

Machinery or heavy equipment – Machinery and heavy equipment (including vehicles) should not be operated while using the Freedom SCS System. Malfunction of the System could result in loss of body control, body function, or a feeling that could render the patient incapable of controlling the system.

Stimulator fracture – If the Stimulator insulation is ruptured or pierced due to extensive forces, unexpected changes in stimulation could result.

Electromagnetic equipment/environments – Avoidance of high electromagnetic equipment radiators or environments is highly encouraged. Examples of equipment and/or environments include the following:

- High-power amateur transmitters/antennas or citizen band (CB) radio or Ham radio used for private recreation, communication, and wireless experimentation.
- Electric arc welding or resistance welding equipment used for melting and joining metals or plastics.
- Industrial electric induction furnace/heater or electric arc furnace/heater used for melting metals and plastics.
- High-voltage areas identified by fenced areas, restricted access signs, and caution signs (safe if outside the fenced area).
- Microwave transmitters identified by fenced areas, restricted access signs, and caution signs (safe if outside the fenced area).
- Television and radio towers identified by fenced areas, restricted access signs, and caution signs (safe if outside the fenced area).
- Linear power amplifiers used for increasing the power output of radio transmitters, wireless communication applications, audio equipment or other electronic equipment.
- Radio telemetry equipment used for tracking location of vehicles, equipment or animals.

Active Implantable or Body Worn Medical Devices – Safety has not been established for patients who use the Freedom SCS System with other active implantable or body worn medical devices. These devices include other neurostimulation systems, insulin pumps, automated external defibrillators (AED), cochlear implants, and wearable medical sensors. Malfunction and/or damage could occur to either system that could result in harm to the patient or other people nearby.

Magnetic Resonance Imaging (MRI) – The Stimulator Receiver and Stimulator Spare Lead are MR Conditional. An MRI examination with the Stimulator Receiver or Stimulator Spare Lead may be safety performed under certain conditions. The Trial Lead is MR Unsafe due to the lack of fixation of the device during the trial period. Refer to the Product Safety Sheet for specific MRI guidelines.

The WAA Programmer component is MR Unsafe; ensure that the WAA Programmer does not enter the MR system room. Since the WAA Programmer is MR Unsafe, the strong magnetic field of the MR system could attract or otherwise damage the WAA Programmer, and in the process cause serious harm to the patient or other people or damage to the MR system.

Radiofrequency (RF) ablation – Safety has not been established for radiofrequency (RF) ablation in patients with a Stimulator. RF ablation may cause induced electrical currents that result in heating and tissue damage. Do not use RF ablation anywhere near the Stimulator. If RF ablation is used, ensure that ablation is not performed over or near the Stimulator.

Electrocautery – If electrocautery tools are used near the Stimulator then the insulation can be damaged. The Stimulator may fail or conduct induced currents. Induced electrical currents can cause heating that results in tissue damage.

When electrocautery is necessary, these precautions must be followed:

- The WAA Programmer should be taken off.
- Bipolar cautery should be used.
- If unipolar cautery is necessary:
  - Only low-voltage modes should be used.
  - The lowest possible power setting should be used.
  - The current path (ground plate) should be kept as far away as possible from the Stimulator.
  - Full-length operating room table ground pads should not be used.
- After electrocautery, confirm that the Stimulator is working as intended.

Electrostatic Discharge (ESD) – Testing indicates the WAA can be susceptible to damage resulting from ESD greater than +/-6kV that can occur in certain environments, such as home use, when the relative humidity is below 30%. Freedom users and caregivers should avoid approaching or touching the WAA in these situations and avoid contact with highly charged conductors, particularly synthetic materials (e.g., nylon, polyester) during periods of low relative humidity (less than 30%). ESD might result in temporary or permanent loss of function. If ESD with the WAA is observed, remove the device from your body and power off then power on the device. Confirm the device indicators/lights are operating correctly before resuming therapy. If the device will not power on, your stimulation therapy will not be delivered and you should contact Stimwave for assistance or replacement.

High-output ultrasonics / lithotripsy – Safety has not been established for high-output ultrasonics or lithotripsy when implanted with the Freedom SCS System. Use of lithotripsy may result in damage to the device or harm to the patient.

Psychotherapeutic procedures – Safety has not been established for psychotherapeutic procedures using equipment that generates electromagnetic interference (e.g., electroconvulsive therapy, transcranial magnetic stimulation) in patients who have spinal cord stimulators. Induced electrical currents can cause heating that may result in tissue damage.

Radiofrequency Identification (RFID) Emitters - Theft detectors, electronic article surveillance (EAS) systems, and radiofrequency identification systems – Tests have been performed with an array of simulated RFID emitter systems, and have demonstrated that the Freedom SCS System (implanted device and WAA) can be affected by separation distances between the Freedom SCS System and the RFID emitter of less than 3m (~10 ft.). More powerful RFID Emitters might cause effect at farther distances. RFID emitters can be hidden or portable and not obvious to the Stimwave user. Any RFID emitter may temporarily interrupt stimulation, or cause elevated levels of stimulation. It is recommended that if a patient feels a change in stimulation near a potential RFID emitter, they promptly move away from the area and remove the WAA from the body.

When possible, it is best to avoid RFID emitters or remove the WAA while passing near RFID emitters. Patients with an implanted device should inform the attendant who may be able to assist them in bypassing any RFID emitter. If unavoidable, the patient should walk through the RFID emitter and promptly move away from the area. Patients should not lean on scanners or linger in the area of RFID emitters.

Computed Tomography (CT) Scanning – Safety has not been established for CT scanning of patients with a Stimulator. X-rays from the scan could cause unintended shocks or malfunctions of the Stimulator.

The CT operator should use CT scout views to determine if implanted medical devices are present and their location relative to the programmed scan range. For CT procedures in which the device is in or immediately adjacent to the programmed scan range, the operator should:

- Remove the WAA Programmer from the CT scan range.
- Minimize X-ray exposure to the implanted device by:
    - Using the lowest possible X-ray tube current consistent with obtaining the required image quality.
    - Making sure that the X-ray beam does not dwell over the Stimulator for more than a few seconds.

After CT scanning directly over the implanted device:

- Place the WAA Programmer on body and turn on stimulation.
- Check for proper stimulation, and that indicator lights are operating as expected.
- Shut off the WAA Programmer if it is suspected that the device is not functioning properly.

Bone growth stimulators – Safety has not been established for bone growth stimulators within the vicinity of the Freedom SCS System. Use of a bone growth stimulator may result in damage to the device or harm to the patient.

Dental drills and ultrasonic probes – Safety has not been established for dental drills or ultrasonic probes within the vicinity of the Freedom SCS System. Use of dental drills or ultrasonic probes may result in damage to the device or harm to the patient.

Electrolysis – Safety has not been established for electrolysis within the vicinity of the Freedom SCS System. Use of electrolysis may result in damage to the device or harm to the patient.

Laser procedures – Safety has not been established for lasers within the vicinity of the Freedom SCS System. Use of lasers may result in damage to the device or harm to the patient.

Radiation therapy – Safety has not been established for high radiation sources such as cobalt 60 or gamma radiation when implanted with the Freedom SCS System. Use of radiation therapy could cause damage to the device or harm to the patient.

Transcutaneous electrical nerve stimulation – Safety has not been established for use of transcutaneous electrical nerve stimulation (TENS) when implanted with the Freedom SCS System. Use of TENS could cause the device to turn off or intermittent/increased stimulation.

Other medical procedures – EMI from the following medical procedures is unlikely to affect the device:

- Diagnostic ultrasound (e.g., carotid scan, Doppler studies)
- Diagnostic x-rays or fluoroscopy
- Magnetoencephalography (MEG)
- Positron emission tomography (PET) scans

- Therapeutic magnets (e.g., magnetic mattresses, blankets, wrist wraps, elbow wraps) – Keep the magnet away from the stimulator site. Magnetic fields will generally not affect the Stimulator.

WAA Programmer Skin Contact – Do not place the WAA Programmer directly on the skin. Direct skin contact may cause irritation and/or sensitivity to the materials. The WAA Programmer must be placed overtop a thin layer of clothing at all times.

Painful Stimulation – If the patient experiences painful stimulation, the amplitude on the WAA Programmer should be decreased immediately and/or removed from the patient's body. Contact your clinician if this continues to occur.

PRECAUTIONS

Physician training – Prescribing clinicians should be experienced in the diagnosis and treatment of chronic intractable pain and should be familiar with using the Freedom SCS System. Implanting clinicians should be experienced in spinal procedures and should review the procedures described in the Instructions for Use.

Keep the WAA Programmer dry – The WAA Programmer is not waterproof. Keep it dry to avoid damage. Do not use the WAA Programmer when engaging in water activities.

Storage temperatures – The Freedom SCS System should be kept within the storage temperatures listed on product packaging. Exceeding the storage temperature could cause harm to you or the component. Please contact the manufacturer if a storage temperature is surpassed.

Stimulator Receiver
Storage Temperature

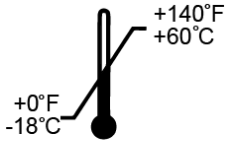

Temperature limitations

Wearable Antenna Assembly
Programmer
Storage Temperature

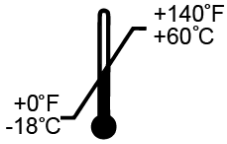

Temperature limitations

Clean the WAA Programmer – Clean the outside of the WAA Programmer with a damp cloth when needed to prevent dust and grime. Mild household cleaners will not damage the device or labels.

Handle the WAA Programmer with care – The WAA Programmer is a sensitive electronic device. Avoid dropping the device onto hard surfaces. Keep the WAA Programmer out of the reach of children and pets.

Medical tests and procedures – Before undergoing medical tests or procedures, contact the clinician to determine if the procedure will cause damage to the patient or to the System.

Physician instructions – Always follow the programs and therapy instructions established by the clinician. Failure to do so may cause the therapy to be less effective in providing pain relief.

Airline policies - Follow airline policies for use of medical spinal cord stimulation systems and electronic equipment during flights. Refer all questions to airline personnel.

Use the WAA Programmer as directed – Use the WAA only as explained by the clinician or as discussed in the User Manual. Using the WAA Programmer in any other manner could result in harm.

Do not dismantle the WAA Programmer – Do not dismantle or tamper with the device. Tampering with the device could result in harm. If the device is not working properly, contact the clinician for help.

Flammable or Explosive Environments – Do not use the WAA Programmer in flammable or explosive environments. Using the WAA Programmer in one of these environments could result in harm.

Use of another patient's WAA Programmer - Never use another patient's WAA Programmer. The therapy programmed is a unique prescription for each patient. Use of another patient's WAA Programmer could result in overstimulation.

Activities requiring excessive twisting or stretching – Avoid activities that potentially can put undue stress on the device. Activities that include sudden, excessive, or repetitive bending, twisting, bouncing, or stretching can cause

your stimulator to fracture or migrate. This can result in a loss of stimulation, intermittent stimulation, and additional medical procedures.

Scuba diving or hyperbaric chambers – Do not dive below 13 meters (45 feet) of water or enter hyperbaric chambers above 1.5 atmospheres absolute (ATA). These conditions can damage the device. Before diving or using a hyperbaric chamber, discuss the effects of high pressure with the clinician.

Skydiving, skiing, or hiking in the mountains – High altitude should not affect the System. However, take care to not put undue stress on the Stimulator. During skydiving, the sudden jerking that occurs when the parachute opens can dislodge or fracture the Stimulator. This can result in a loss of stimulation, intermittent stimulation, and additional medical procedures.

Unexpected changes in stimulation – Electromagnetic interference, changes in posture, and other activities can cause a perceived increase in stimulation. Some patients have described this as a jolting or shocking sensation. You should reduce your amplitude to the lowest setting and turn OFF your System before engaging in activities that could become unsafe. Discuss these activities with your clinician.

Interference during programming - If interference is suspected during programming of the WAA Programmer, the clinician should confirm that the Bluetooth® data transmission is operating properly. Bluetooth® data communication is confirmed by the blue light indicator on the WAA Programmer blinking. If during the programming session the light indicator is not blinking then the clinician should do the following:

- Terminate the current programming session and shut down the WaveCrest Application.
- Check for sources of Bluetooth® interference in the surrounding area.
- Remove or turn off the source of interference.
- Re-establish the Bluetooth® link with the WAA Programmer through pairing.
- Resume programming by opening the WaveCrest Application.
- Confirm the light indicator is now blinking.

ADVERSE EVENT SUMMARY

Implantation of a spinal cord stimulation system is similar to any surgical procedure. Risks include the following:

- Allergic or immune system response to implanted material
- Infection
- Leakage of cerebrospinal fluid
- Epidural hemorrhage, hematoma, or paralysis

Therapeutic use of the Freedom SCS System incurs the following risks:

- Undesired change in stimulation, including uncomfortable chest wall stimulation
- Stimulator migration, erosion through the skin, or fracture causing a loss of therapeutic effect
- Electromagnetic interference causing a change in System performance
- Loss of therapeutic effect despite a functioning system

Adverse events that could occur with the Freedom SCS System:

- Stimulator migration, resulting in altered stimulation therapy that may be uncomfortable
- Stimulator fracture, resulting in loss of stimulation
- Infection, resulting in tissue sensitivity, redness and swelling

Adverse effects of stimulation are usually mild and go away when stimulation is turned off. Contact your clinician immediately if you experience any problems. Over time there could be changes in the level of pain control. Contact your clinician if you experience a change in stimulation that you believe is a result of the Stimulator slipping from the implant site.

PARTS OF YOUR STIMULATION SYSTEM

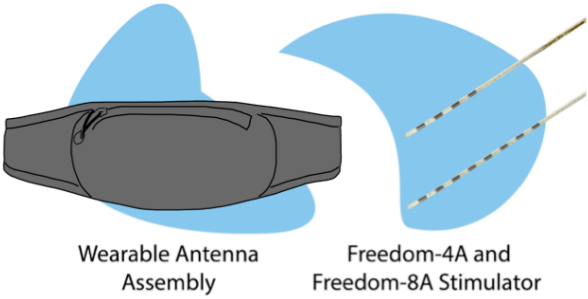

Freedom Stimulator – Also known as an "implant" or "receiver". The Stimulator is a set of thin wires and a miniature receiver, covered with a protective casing. The Stimulator has small metal electrodes near the tip that are set to different electrical polarities similar to the poles on a battery. An electrical field of energy is created when power is applied to the electrodes. The electrical field aids in blocking the pain signals coming from certain nerves of the spinal cord. The Stimulator receives energy wirelessly from the external unit (WAA).

Wearable Antenna Assembly (WAA) Programmer – The WAA Programmer is an electronic device used to power the Stimulator. Wireless power is sent from the WAA and through your skin to the Stimulator. The WAA Programmer is worn around your midsection over top of the area where the Stimulator(s) is implanted.

The WAA Programmer communicates with your Stimulator by sending radiofrequency signals. Your Stimulator only accepts communication from your WAA Programmer. The clinician programs your WAA Programmer with your specific Stimulation parameters. A Bluetooth® connection is made in order to program your WAA Programmer.

OVERVIEW OF THE WAA PROGRAMMER

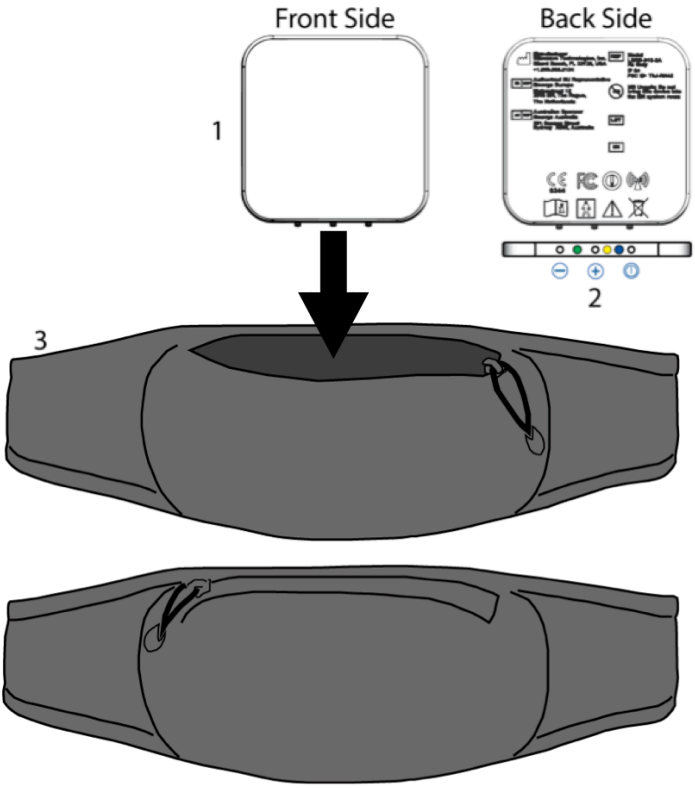

1. Transmitter – Used to transmit power to your Stimulator.
2. User Controls – Controls used to turn the power on/off and adjust stimulation amplitude.
3. Belt – An adjustable belt that holds the transmitter.

The transmitter should be placed in the belt as illustrated above. Make sure the Back Side is facing your body when worn.

OVERVIEW OF THE USER CONTROLS

Button Cover, Buttons and LEDs

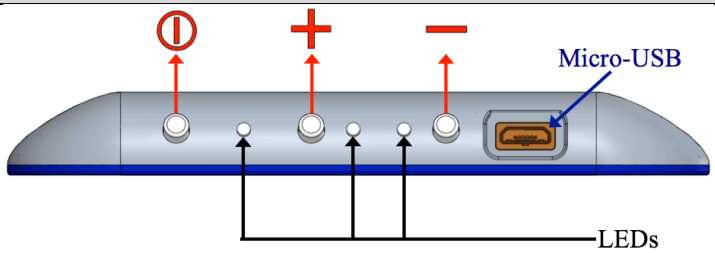

BUTTONS

Key	Action Description
⏻	Power ON/OFF Button – Used to turn the WAA ON or OFF. Green LED is a default indicator and will blink to indicate power status.
+	Increase Amplitude Button – Used to increase the stimulation strength.
−	Decrease Amplitude Button – Used to decrease the stimulation strength.
−+	Change Program Selection – Depressing the Increase Amplitude Button and the Decrease Amplitude Button at the same time will alternate the programmed setting to either A, B, or C.

LEDS

Action Description		Pattern and Color	Description of Pattern
	Charging (Correct Alignment)		Solid Blue
	OFF, Not Charging (Misalignment)		None
	Charged		Blinking Blue
	Low Battery		Blinking Yellow
	Bluetooth Connected		Solid Blue
	Bluetooth No Connection		Blinking Blue
	Receiving Information/Data		Random Blinking Yellow
	ON Setting A		Blinking Green (single)
	ON Setting B		Blinking Green (double)
	ON Setting C		Blinking Green (triple)
	Minimum Index		Blinks Once Yellow
	Maximum Index		Blinks Once Yellow

POSITIONING THE WAA PROGRAMMER

⚠WARNING:

Do not place the WAA Programmer directly on your skin. Direct skin contact may cause irritation and/or sensitivity to the materials. The WAA Programmer must be placed overtop a thin layer of clothing at all times.

The WAA Programmer must be placed over the general region of the stimulator in order to transfer the optimal amount of power to the device. Refer to the following illustrations for the best location to wear the WAA Programmer. Work with your clinician to find the optimal location for the most effective therapeutic relief.

1. Attach the WAA Programmer around your midsection.
2. Position so that the antenna portion is directly in the middle of your lower back.
3. Ensure that the WAA Programmer is placed overtop of a thin layer of clothing. Do not place directly on your skin.
4. Adjust the position up or down depending on where your Stimulator is located.

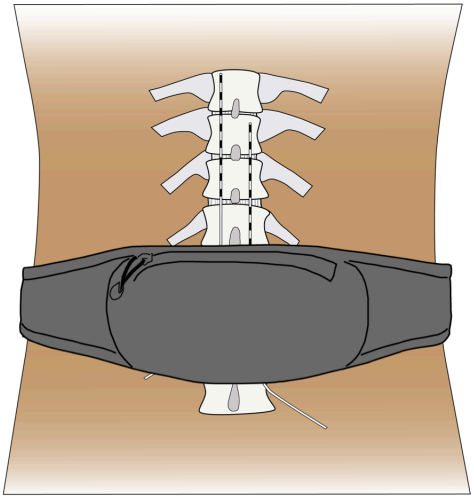

The WAA Programmer is placed over the center of the spine.

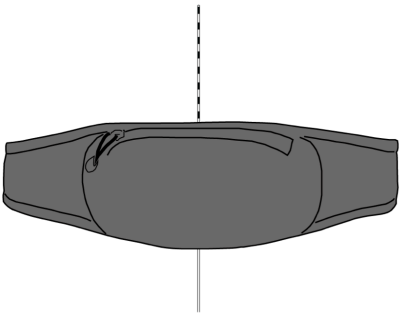

This figure illustrates the optimal position of the WAA Programmer over one Stimulator.

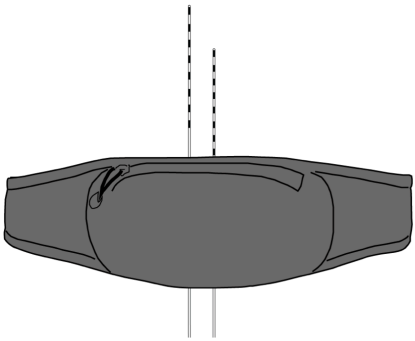

This figure illustrates the optimal position of the WAA Programmer over two vertically spaced Stimulators.

TURNING THE WAA PROGRAMMER "ON" OR "OFF"

⚠CAUTION:

Do not place the WAA Programmer directly on your skin. Direct skin contact may cause irritation and/or sensitivity to the materials. The WAA Programmer must be placed overtop a thin layer of clothing at all times.

Notes:

- *WAA Programmer automatically starts at lowest amplitude setting when turned on.*

Steps:

1. Press and hold the Power ON/OFF Key until the green Power Indicator Light activates.

STARTING STIMULATION FOR THE STIMULATOR

Steps:

1. Turn on the WAA Programmer.
2. Place the WAA Programmer directly over top of the stimulator as described.
3. Adjust the amplitude as directed by your clinician by using the Increase or Decrease Amplitude Key.

SELECTING A STIMULATION PROGRAM

The WAA Programmer device has three program options that your doctor may set. Your doctor may set each program to stimulate a different part of your body. Talk with your doctor to determine when and how to use the programs. Use the green indicator light in order to identify which program is currently active on the device.

- Program A = One Blink
- Program B = Two Blinks
- Program C = Three Blinks

Steps:

1. Turn on the WAA Programmer.
2. The WAA Programmer defaults to the last program used.
3. Press “+” and “-” buttons at the same time to switch to the next program.
4. The light pattern will blink to signify which program is active.

INCREASING OR DECREASING AMPLITUDE

⚠ CAUTION:

Turn the power off or decrease the amplitude before changing the position of the WAA Programmer. Do this to prevent possible uncomfortable or unexpected stimulation.

Notes:

- *The WAA Programmer must be turned on to increase or decrease the amplitude.*
- *The WAA Programmer does not need to be placed over the* Stimulator *to change amplitude.*

Steps:

1. Press the "Up" arrow key to increase the amplitude.
2. Press the "Down" arrow key to decrease the amplitude.

To receive the most effective therapy you will need to adjust your stimulation throughout the day. Your clinician will provide guidelines about when you may want to adjust your stimulation. The following table provides general guidelines on how to adjust your stimulation.

Situation	Action
Stimulation is too strong	Decrease amplitude with the Decrease Stimulation Key
Stimulation is not strong enough	Increase amplitude with the Increase Stimulation Key
You have unexpected changes in stimulation	1. Remove the WAA Programmer 2. Decrease amplitude 3. Put the WAA Programmer on your body 4. Adjust amplitude to the desired level
You have tried adjusting stimulation but are unable to find an effective setting	Contact your clinician
You will be using potentially dangerous equipment	Turn off stimulation Remove the WAA Programmer
You will be having a medical procedure	

MAINTENANCE

BATTERY CHARGING

Notes:

- *The battery is built into the WAA Programmer and does not need to be removed. Contact your clinician if you experience poor battery life.*
- You will need the Charger Kit to recharge the internal battery.

Steps:

1. Remove the WAA Programmer from your midsection.
2. Remove the WAA Programmer from the pouch.
3. Connect the USB cable to the power adapter.
4. Plug the power adapter into a wall outlet.
5. Connect the opposite end of USB cable to the micro-USB port on the side of the WAA Programmer.
6. Charging Indicator Light will blink on while the battery is charging.
7. Allow the battery to charge for at least four hours.
8. Charging Indicator Light will stay solid when the battery is fully charged.
9. WAA Programmer is now ready to be used again.

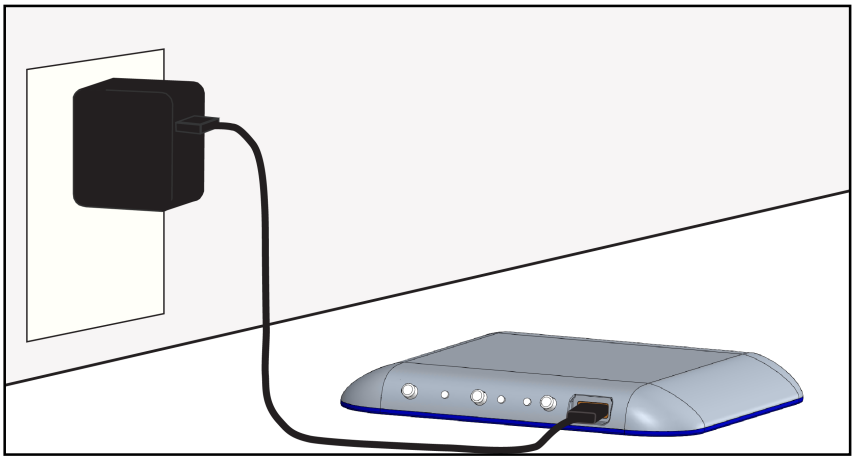

Common Questions	Response
How long will it take to recharge a “dead” or depleted battery?	It normally takes an average of four (4) hours to recharge the battery.
When is the battery near depletion, and how will I know?	The yellow indicator light will begin blinking. Eventually the WAA Programmer will turn off and not respond to user controls. You should place the WAA Programmer on the charger pad as illustrated above.
What happens if I deplete the battery completely?	You cannot damage the WAA Programmer by running the battery completely empty. The device has safeguards to prevent this from harming the battery. Place the WAA Programmer on the charger as described.
How long will a fully charged battery provide power?	Eight (8) hours on average. The battery performance is affected by the amount of total power used on average.
When is the battery done charging?	The battery is done charging when the Charging Indicator Light (blue) stays on.
Can I charge while the device is turned on?	No, you cannot charge the device while it is turned on. The stimulation cannot be used while the device is on the charger.
Must I remove the device from the charger when full?	It is not necessary to remove the device from the charger when full.

CLEANING AND CARE PRECAUTIONS

Notes:

- Clean the outside of the device with a damp cloth when necessary. Mild household cleaners will not damage the device or labels.
- The device is not waterproof. Do not allow moisture to get inside the device.
- Keep the device out of the reach of children and pets.
- Use the device only as explained to you by your clinician or as discussed in this manual.
- Handle the device with care. Do not drop, strike, or step on the device.
- Do not dismantle or tamper with the device.

SAFETY AND TECHNICAL CHECKS

Periodic safety checks or maintenance of the WAA Programmer are not required. The WAA Programmer contains no user-serviceable parts. If repair or service is needed, contact your clinician or a Stimwave representative for a replacement. Refer to the contact information at the end of this manual.

WAA PROGRAMMER DISPOSAL

The WAA Programmer should be returned to your clinician or a Stimwave representative. Do not dispose of your WAA Programmer in the garbage.

PATIENT IDENTIFICATION CARD

A patient identification card (ID) is mailed to you after Stimwave receives your implant registration form from the hospital. The patient ID card supplies information about you, your stimulator system, and your doctor. Your identification cad may allow you to bypass security devices. Carry this card with you at all times. If you move, change doctors, or lose your card, contact Stimwave for a replacement card. Refer to the Stimwave contacts at the end of this manual.

WHEN TO CALL YOUR CLINICIAN

Contact your clinician if any of the following events occur:

- You have pain, redness, or swelling later than 6 weeks after the implant procedure.
- The stimulation is causing you to have pain or discomfort.
- The system is not working properly.
- You cannot adjust stimulation using the user controls.
- You cannot place the WAA Programmer in the optimal position to communicate with the stimulator.
- If you lose your WAA Programmer device.

Your clinician will schedule follow-up visits to make sure your device is working properly and that the stimulation is managing your pain.

SPECIFICATIONS

Item	Specification
Amplitude	0 to 12.8 mA per electrode pair
Pulse Width	50 to 500 µs
Frequency (of therapy)	5 to 1,500 Hz
Number of Channels	2
Number of Programs (selectable)	3
Transmit Carrier Frequency	915 MHz
Bluetooth Frequency	2.402 GHz
Charging Pad Power Source	120-240V 50-60 Hz power line
Operating/storage temperature, relative humidity	-18º C to 60º C (0º F to 140º F) 20% to 90%
Operating/storage atmospheric pressure	70 kPa to 150 kPa (20.7 in Hg to 44.3 in Hg)
Size (approximate)	10 cm x 10 cm x 2 cm (3.9 in x 3.9 in x 0.6 in)
Weight (approximate)	0.5 kg (1 lb.)
WAA Programmer Material (Do not place directly on skin, to be worn over a thin layer of clothing at all times)	Silicone and Aluminum

Parameter	Min	Typical	Max	Units
Supply Voltage	120	---	240	$V_{A/C}$
Supply Voltage Frequency	50	---	60	Hz
Output Voltage (DC)	4.5	5	5.5	V
Input Current	---	---	1.0	A
Output Current (each)	---	---	2.4	A
Battery Recharge Time (assuming 3.7V battery)	2	3	8	hours
Modulation	---	CW	---	N/A

WIRELESS INFORMATION

The Freedom SCS System uses wireless technology to program the WAA Programmer and to power the stimulator. The WAA Programmer is programmed utilizing a Bluetooth® data communication protocol. Bluetooth® is used only during programming sessions and only by a trained clinician. Various programs are stored in memory within the WAA Programmer, which can be selected as needed. The WAA Programmer communicates with the Stimulator using a pulsed radio frequency signal centered at a frequency of 915 MHz.

Wireless Specifications	
Transmission Frequency of WAA Programmer	915 megahertz (MHz)
Bandwidth of WAA Programmer	149 kilohertz (kHz)
WAA Programmer Tissue penetration depth	Up to 4 inches or 10 cm
Quality of Service	In order for the Freedom SCS System to operate, the WAA Programmer should be centered over the Stimulator within 0.8 inches or 2 cm. To better ensure proper function, the WAA Programmer should be worn in the same position as when it was originally fitted. When the wireless link between the WAA Programmer and Stimulator is broken, stimulation will cease. The wireless link may not function in the presence of large magnetic or radio fields.
Bluetooth® Version- WAA Programmer	4.1 (Low Energy Only)
Bluetooth® Version of WaveCrest Application	4.0
Frequency of Bluetooth®	2.4 gigahertz (GHz)
Bandwidth of Bluetooth®	900 kHz
Power of Bluetooth®	2.5 milliwatt (mW)
Bluetooth® Operating Distance	4 to 5 meters
Wireless Link Performance	Wireless link active less than 10% of the time when the WAA Programmer is 1 inch or closer to the implant.

Wireless Specifications	
Wireless Security	Stimulator will only operate if it is within a very short distance of the WAA Programmer and such communication is disabled when Bluetooth® is enabled. The WAA Programmer uses encryption and proprietary data protocols to reduce the likelihood of inadvertent control or malicious “hacking” of the System through Bluetooth®. Only the WaveCrest Application is able to communicate with the WAA Programmer via Bluetooth®. No identifiable personal data is stored or transmitted by the WAA Programmer.
Bluetooth Quality of Service	Typical Bitrate: 360 bps Maximum Data Latency: 100 ms Maximum Operating Distance: 4 to 5 meters

TROUBLESHOOTING

NOTE:

- *If a problem is not solved after several attempts, or if a problem is not described here, contact your clinician or Stimwave representative.*

This information can help you to solve problems that may arise with the WAA Programmer. It also provides information on when to call your clinician. See the following table for a list of common problems and actions to remedy the issue.

Problem	Causes and Actions
Uncomfortable stimulation: You are too uncomfortable with the current stimulation to think about how to change it.	Selected parameter settings are not suitable for your activity or posture. ▪ Reduce the amplitude of the WAA Programmer. ▪ Remove the WAA Programmer from your body.
Intermittent stimulation: You feel stimulation only some of the time.	WAA Programmer may have a poor connection with the implanted Stimulator. The antenna may not be placed over the area of the implanted Stimulator. ▪ Place antenna directly over the implanted Stimulator. ▪ If you are not receiving adequate pain relief, contact your clinician or Stimwave.
No stimulation: You do not feel stimulation but you think stimulation should be on.	Stimulation is off. ▪ Turn the power OFF and wait 5 seconds before turning the power back ON. Antenna is not placed over the Stimulator. ▪ Place the antenna directly over the implanted Stimulator. WAA Programmer amplitude is set too low to feel stimulation. ▪ Increase the amplitude.

Problem	Causes and Actions
The WAA Programmer is unresponsive: The indicator light does not turn on. The stimulation amplitude keys do not respond.	The WAA Programmer is not powered on. ▪ Turn the power ON. The WAA Programmer system has “frozen”. ▪ Turn the power OFF and wait 5 seconds before turning the power back ON. The battery is not charged. ▪ Recharge the battery by placing the WAA Programmer on the charger.
Dropped WAA Programmer: Your WAA Programmer falls off a cabinet or table.	WAA Programmer is designed to withstand a short drop on a hard surface and still operate normally. Try powering ON the WAA Programmer and allow it to transmit for 10 minutes while not worn on the body. If the WAA appears to be functioning properly, try using it.
Fluid on the WAA Programmer: Fluid was spilled onto the WAA Programmer or the WAA Programmer was dropped into water.	WAA Programmer is not waterproof, and water can damage the device. ▪ Immediately remove the WAA Programmer from the water, then dry the WAA Programmer with a towel damped with clean tap water. Unplug the power cord and allow the WAA Programmer to dry at room temperature for 24-48 hours.

Contact Information

Manufacturer
Stimwave Technologies Incorporated
901 East Las Olas Boulevard, Suite 201
Fort Lauderdale, FL 33301
United States
Telephone: +1.800.965.5134
Fax: +1.800.965.5134
Internet: www.stimwave.com

05-0231-7 Published May 2016

European Authorized Representative
Emergo Europe
Molenstraat 15
2513 BH, The Hague
Netherlands

Australian Sponsor
Emergo Australia
Level 20
Tower II, Darling Park
201 Sussex Street
Sydney, NSW 2000
Australia