2012 Chip Antenna

For Bluetooth / WLAN Applications

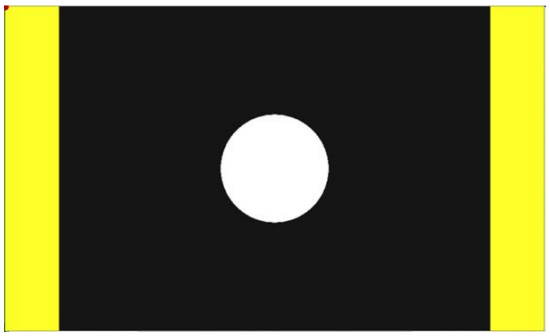

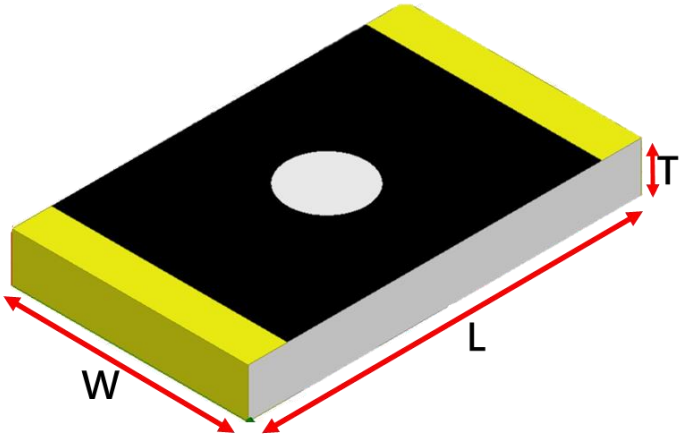

	Dimension (mm)
L	2.0 ± 0.20
W	1.2 ± 0.20
T	0.25 ± 0.05

P/N: LTA212450-P2M

Shenzhen Semiglead Electronics Co., Ltd 13510385948 sam@semiglead.com

616, 6th Floor, Fengtian Building, South Side of East Ring 1st Road, Yousong Community, Longhua Street, Longhua District, Shenzhen,

Part Number Information

LTA	21	2450	D	P2M
A	B	C	D	E

A	**Product Series**	**Antenna**
B	**Dimension L x W**	**2.0×1.2 mm (±0.2mm)**
C	**Frequency**	**2450MHZ**
D	**Type**	**PIFA**
E	**Product Name**	**P2M**

1. Electrical Specification

Specification		
Part Number	LTA212450-P2M	
Frequency	2400~2500	MHz
Bandwidth	90 (Min.)	MHz
Return Loss	-10 (Max)	dB
Peak Gain	2.16	dBi
Impedance	50	Ω
Operating Temperature	-40～+85	℃
Maximum Power	1	W
Resistance to Soldering Heats	10 (@ 260℃)	sec.
Polarization	Linear	
Azimuth Beamwidth	Omni-directional	
Termination	Cu / Sn (Leadless)	

Shenzhen Semiglead Electronics Co., Ltd 13510385948 sam@semiglead.com

616, 6th Floor, Fengtian Building, South Side of East Ring 1st Road, Yousong Community, Longhua Street, Longhua District, Shenzhen,

2. Recommended PCB Pattern (Unit : mm)

a.Evaluation Board Dimension

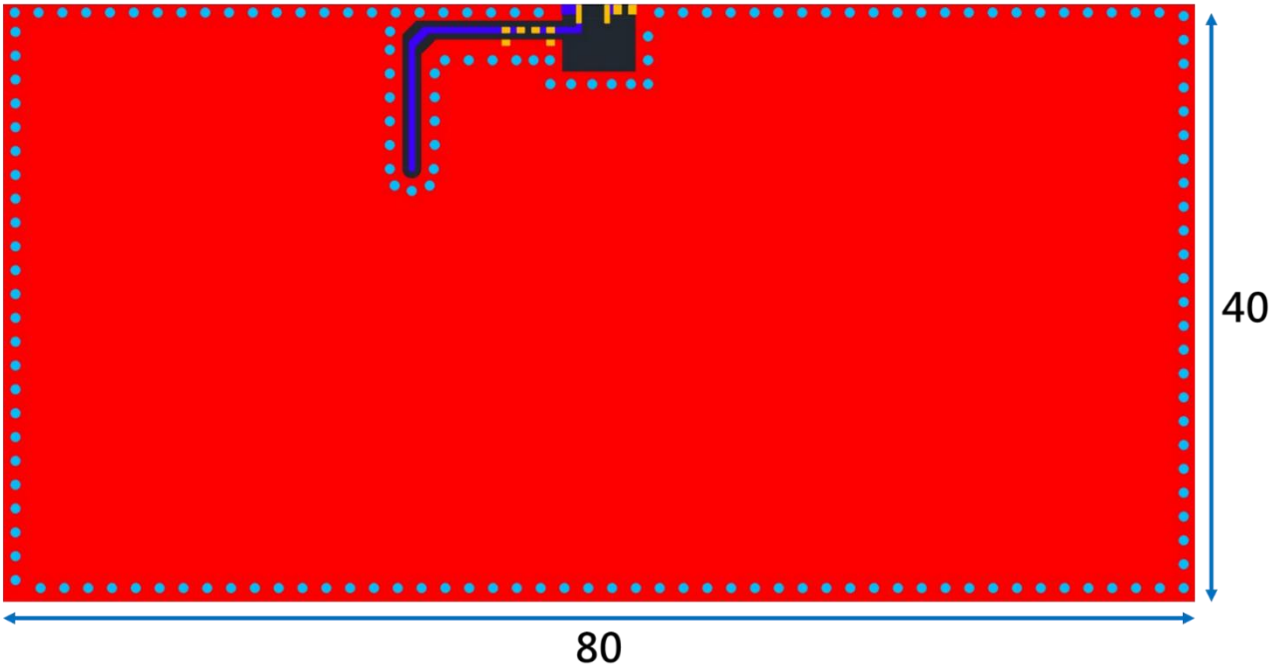

b.Layout Dimensions in Clearance area (Size=5.0*4.0mm)

Unit : mm

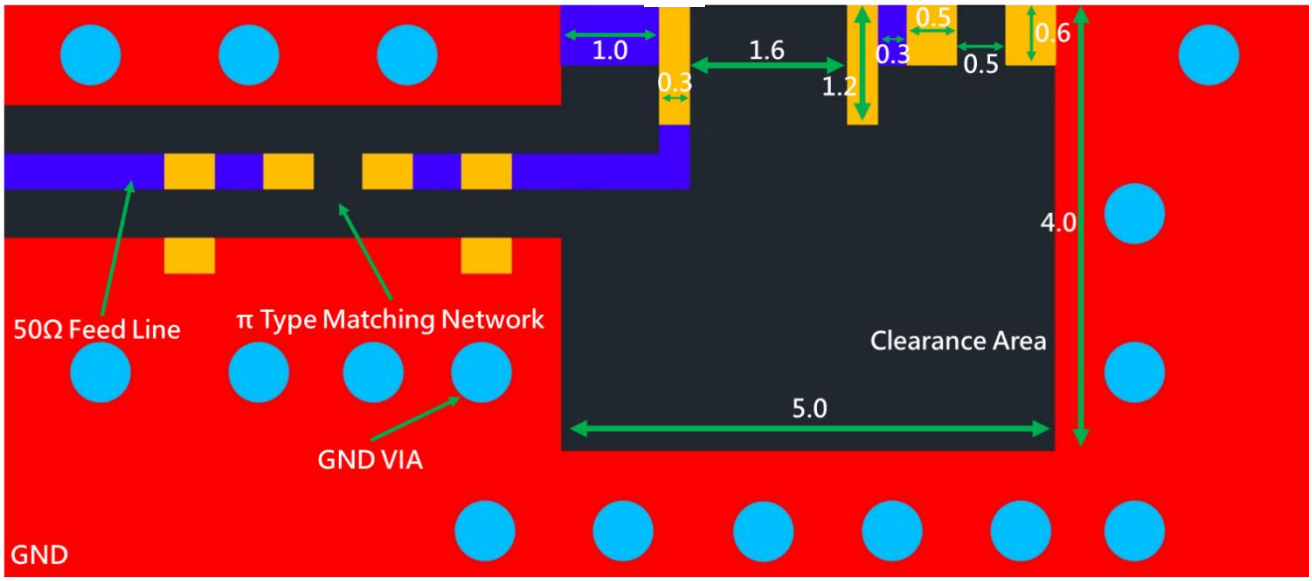

Shenzhen Semiglead Electronics Co., Ltd 13510385948 sam@semiglead.com
616, 6th Floor, Fengtian Building, South Side of East Ring 1st Road, Yousong Community, Longhua Street, Longhua District, Shenzhen,

3. Suggested Matching Circuit

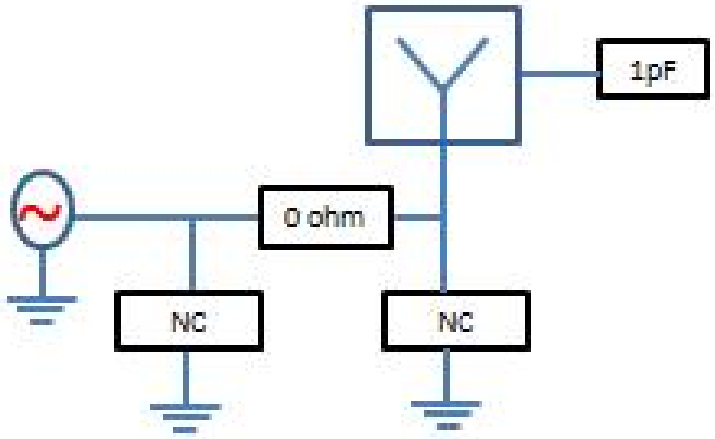

4. Measurement Results

a. Return Loss

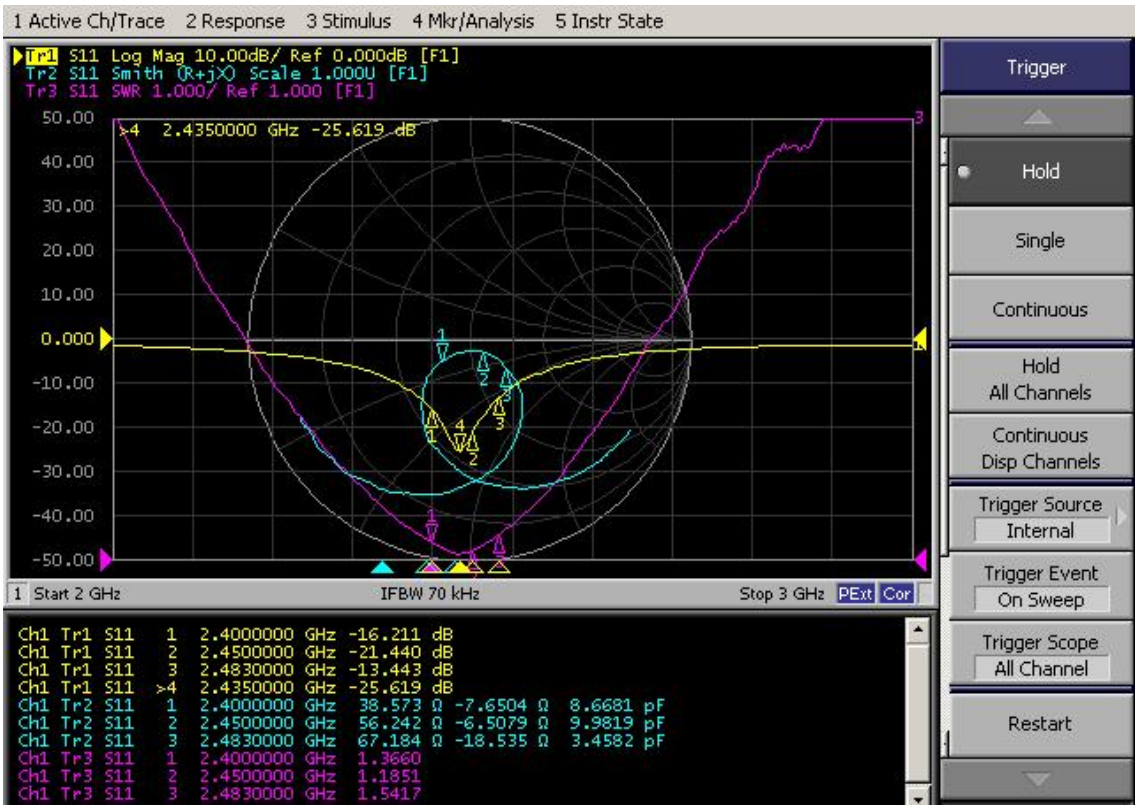

b. Radiation Pattern

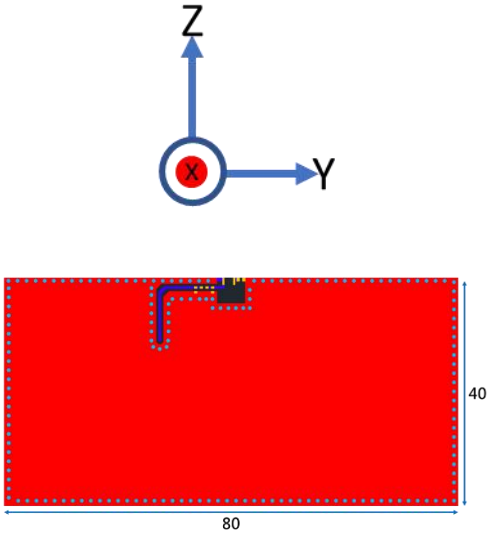

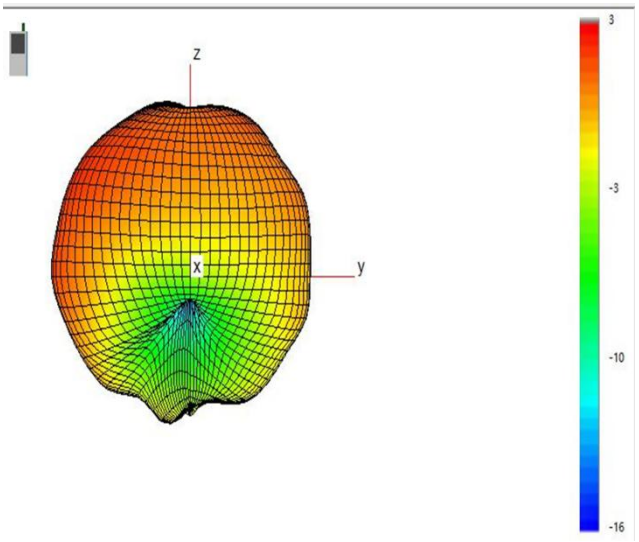

XY-Plane Total

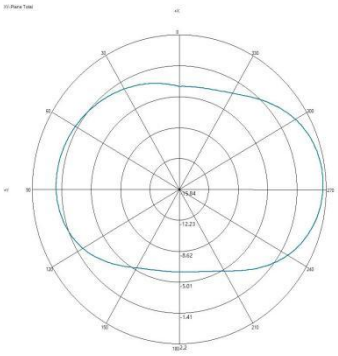

ZY-Plane Total

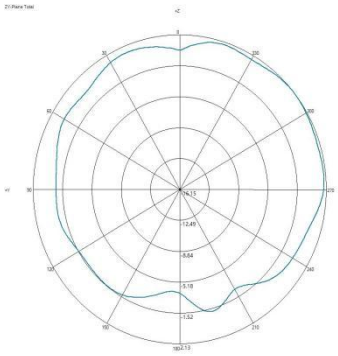

ZX-Plane Total

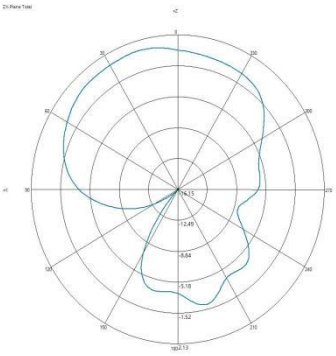

Gain-Plane

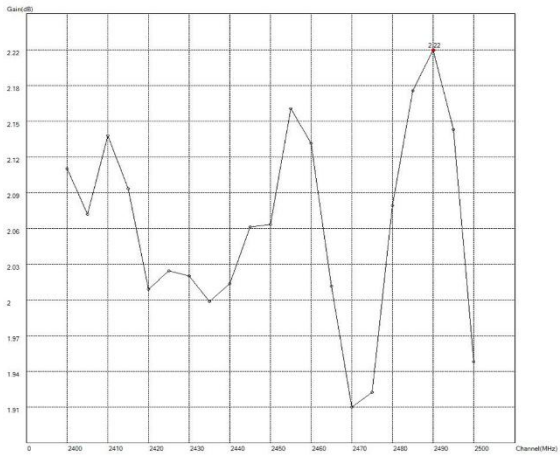

Efficiency-Plane

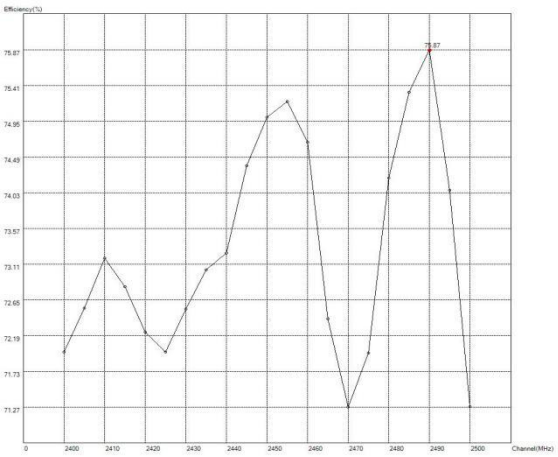

Frequency (MHz)	2400	2450	2500
Efficiency (dB)	-1.42	-1.24	-1.47
Efficiency (%)	71	75	71
Peak Gain (dBi)	2.11	2.16	1.94

Shenzhen Semiglead Electronics Co., Ltd 13510385948 sam@semiglead.com

616, 6th Floor, Fengtian Building, South Side of East Ring 1st Road, Yousong Community, Longhua Street, Longhua District, Shenzhen,

5.Reliability and Test Condictions

<table>
<tr><th>ITEM</th><th>REQUIREMENTS</th><th>TEST CONDITION</th></tr>
<tr><td>Solderability</td><td>1. Wetting shall exceed 90% coverage
2. No visible mechanical damage
 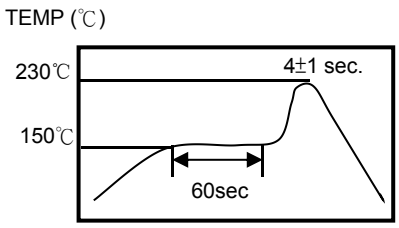
</td><td>Pre-heating temperature:150℃/60sec.
Solder temperature:230±5℃
Duration:4±1sec.
Solder:Sn-Ag3.0-Cu0.5
Flux for lead free: rosin</td></tr>
<tr><td>Solder heat Resistance</td><td>1. No visible mechanical damage
2. Central Freq. change :within ± 6%
 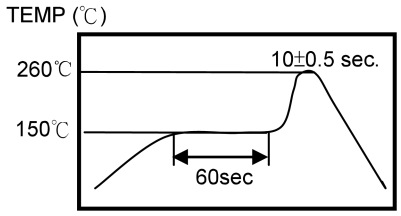
</td><td>Pre-heating temperature:150℃/60sec.
Solder temperature:260±5℃
Duration:10±0.5sec.
Solder:Sn-Ag3.0-Cu0.5
Flux for lead free: rosin</td></tr>
<tr><td>Component Adhesion (Push test)</td><td>1. No visible mechanical damage</td><td>The device should be reflow soldered(230±5℃ for 10sec.) to a tinned copper substrate A dynometer force gauge should be applied the side of the component. The device must with-ST-F 0.5 Kg without failure of the termination attached to component.</td></tr>
<tr><td>Component Adhesion (Pull test)</td><td>1. No visible mechanical damage</td><td>Insert 10cm wire into the remaining open eye bend ,the ends of even wire lengths upward and wind together.
Terminal shall not be remarkably damaged.</td></tr>
<tr><td>Thermal shock</td><td>1. No visible mechanical damage
2. Central Freq. change :within ±6%
<table><tr><th>Phase</th><th>Temperature(℃)</th><th>Time(min)</th></tr><tr><td>1</td><td>+85±5℃</td><td>30±3</td></tr><tr><td>2</td><td>Room Temperature</td><td>Within 3sec</td></tr><tr><td>3</td><td>-40±2℃</td><td>30±3</td></tr><tr><td>4</td><td>Room Temperature</td><td>Within 3sec</td></tr></table></td><td>+85℃=>30±3min
-40℃=>30±3min
Test cycle:10 cycles
The chip shall be stabilized at normal condition for 2~3 hours before measuring.</td></tr>
<tr><td>Resistance to High Temperature</td><td>1. No visible mechanical damage
2. Central Freq. change :within ±6%
3. No disconnection or short circuit.</td><td>Temperature: 85±5℃
Duration: 1000±12hrs
The chip shall be stabilized at normal condition for 2~3 hours before measuring.</td></tr>
<tr><td>Resistance to Low Temperature</td><td>1. No visible mechanical damage
2. Central Freq. change :within ±6%
3. No disconnection or short circuit.</td><td>Temperature:-40±5℃
Duration: 1000±12hrs
The chip shall be stabilized at normal condition for 2~3 hours before measuring.</td></tr>
<tr><td>Humidity</td><td>1. No visible mechanical damage
2. Central Freq. change :within ±6%
3. No disconnection or short circuit.</td><td>Temperature: 40±2℃
Humidity: 90% to 95% RH
Duration: 1000±12hrs
The chip shall be stabilized at normal condition for 2~3 hours before measuring.</td></tr>
</table>

6.Soldering and Mounting

Mildly activated rosin fluxes are preferred. The minimum amount of solder can lead to damage from the stresses caused by the difference in coefficients of expansion between solder, chip and substrate. The terminations are suitable for all wave and re-flow soldering systems. If hand soldering cannot be avoided, the preferred technique is the utilization of hot air soldering tools.

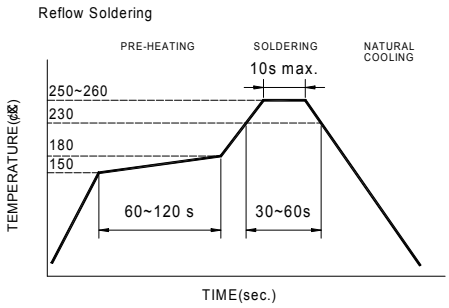

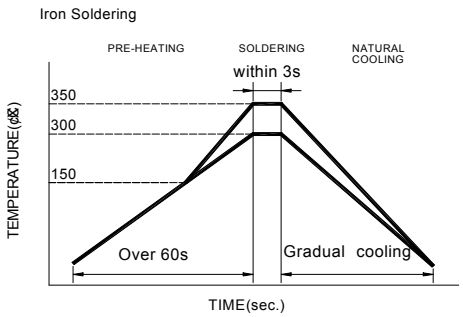

Recommended temperature profiles for re-flow soldering in Figure 1.

Products attachment with a soldering iron is discouraged due to the inherent process control limitations. In the event that a soldering iron must be employed the following precautions are recommended.

- Preheat circuit and products to 150℃
- Never contact the ceramic with the iron tip
- Use a 20 watt soldering iron with tip diameter of 1.0mm
- 280℃ tip temperature (max)
- 1.0mm tip diameter (max)
- Limit soldering time to 3 sec.

7.Packaging Information

◆Tape Specification:

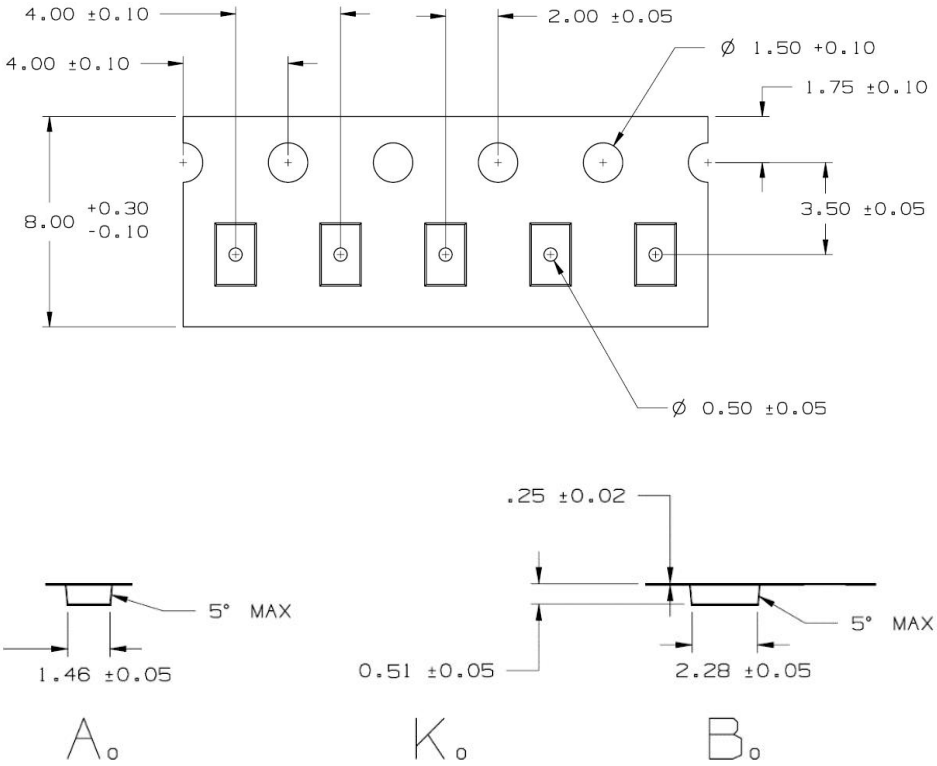

◆Reel Specification: (7'', Φ180 mm)

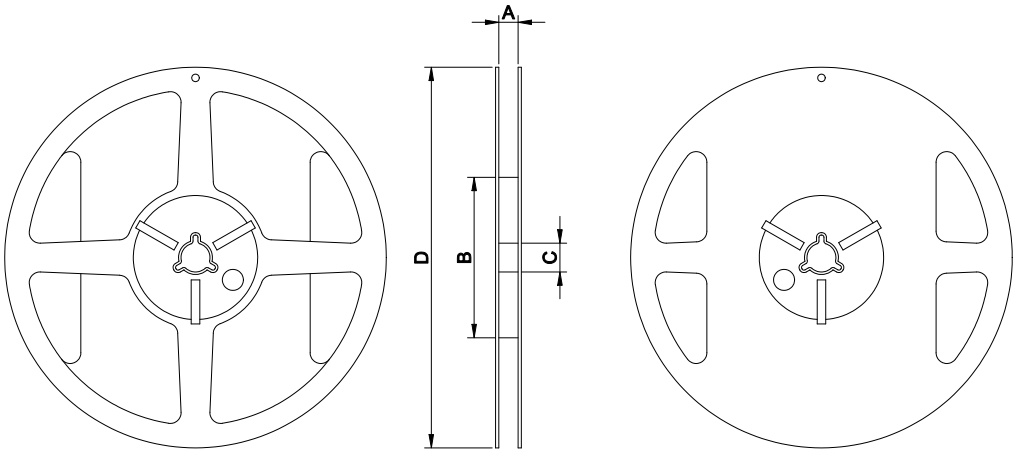

7" x 8 mm

Tape Width(mm)	A(mm)	B(mm)	C(mm)	D(mm)	Chip/Reel(pcs)
8	9.0±0.5	60±2	13.5±0.5	178±2	6000

Shenzhen Semiglead Electronics Co., Ltd 13510385948 sam@semiglead.com

616, 6th Floor, Fengtian Building, South Side of East Ring 1st Road, Yousong Community, Longhua Street, Longhua District, Shenzhen,

8.Storage and Transportation Information

Storage Conditions

To maintain the solderability of terminal electrodes:

1. Temperature and humidity conditions: -10~ 40℃ and 30~70% RH.

2. Recommended products should be used within 6 months from the time of delivery.

3. The packaging material should be kept where no chlorine or sulfur exists in the air.

Transportation Conditions

1. Products should be handled with care to avoid damage or contamination from perspiration and skin oils.

2. The use of tweezers or vacuum pick up is strongly recommended for individual components.

3. Bulk handling should ensure that abrasion and mechanical shock are minimized.