Smart Watch
User Manual

Please carefully read the user manual to ensure safety.

An Introduction to Device

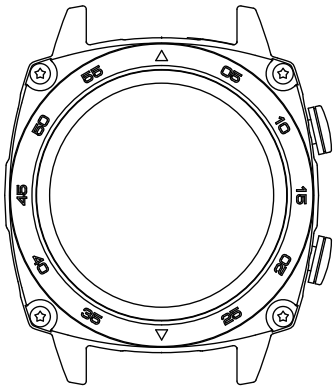

Power Key
1.Short press to brighten the screen
2.Long press to power on or off

Function Key

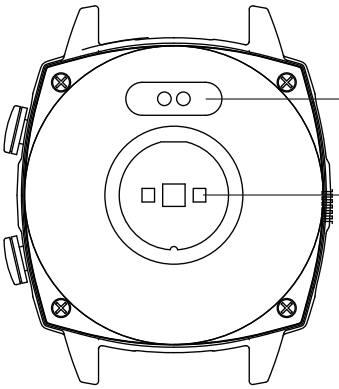

Charging Port

Heart Rate Sensing Area

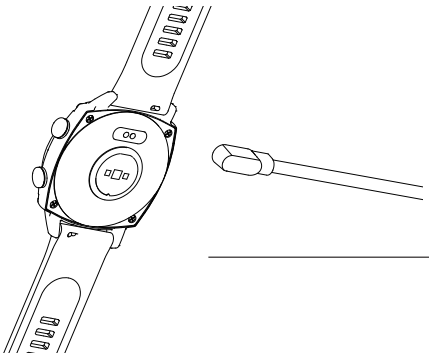

Connect to the USB cable to charge before turning on the smart watch for the first time

APP Binding

Long press the Power Key to power on - enter power-on guide to set language - scan the QR code and download H Band to pair and connect - set the watch on the APP (not require account registration)

Notes: 1. Please ensure that your mobile Bluetooth and GPS are turned on prior to connection;

2.Do not directly pair mobile Bluetooth with watch;

3.Support (1) Android 5.0 and more advanced systems; (2) IOS 10.0 and more advanced systems

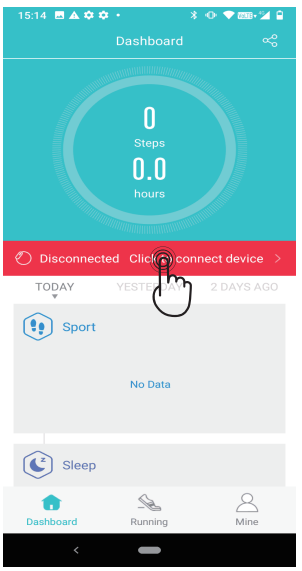

1.Please turn your mobile Bluetooth and GPS on;
2.Click device connection on the APP home page to search device.

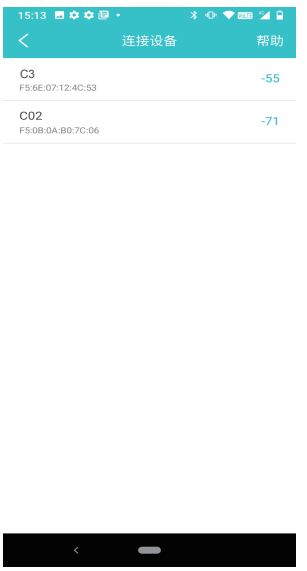

Select product type: C3

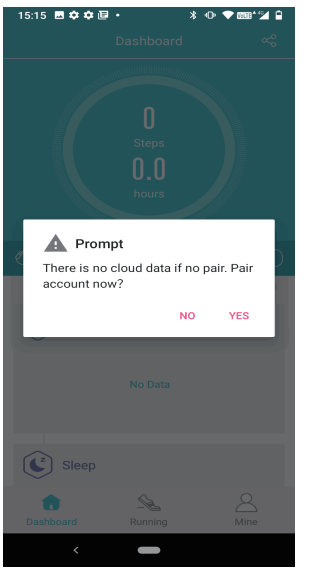

Click "YES" to bind

Enter more operations

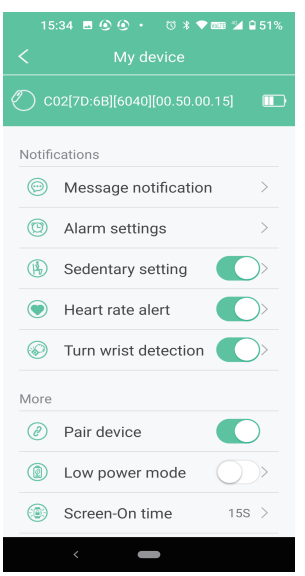

Enter APP settings

Wear / Replace

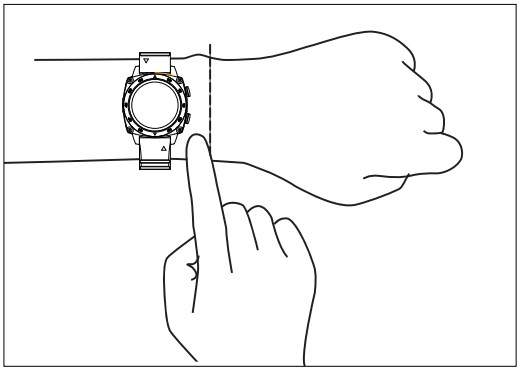

Keep a certain distance away from carpus when wearing the watch, and adjust to a comfortable tightness.

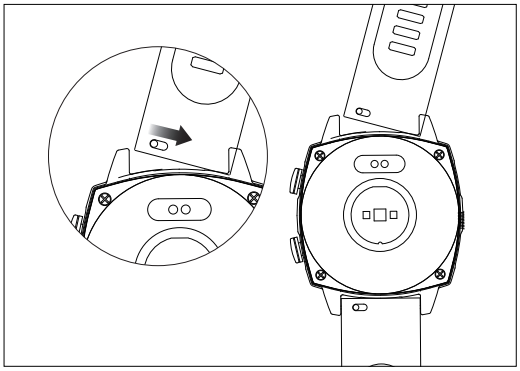

Switch on and remove wrist strap

Note: 1. Too loose wearing may affect the data accuracy of heart rate;
2. Keep its surface clean and dry.

Interface Operation Instructions

1.Dial Plate Change

Long Press the dial plate for 3s to enter the change interface

2. Interface Operation

Find Your Phone, Alarm Clock, Brightness Adjustment, Do Not Disturb, About the Device (model, MAC/version)

Status Bar

Main Interface

Step Counting

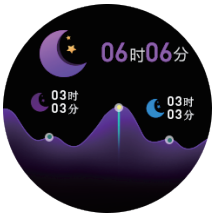

Sleep

Heart Rate

Message Bar

Remark: Slide right and left to enter the shortcut interaction interface; slide up to enter the message notification bar interface and slide down to enter the status settings bar.

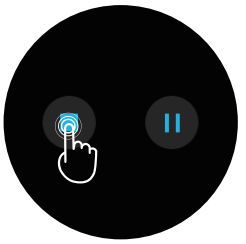

Remark: Slide left to exit under the sports mode.

3. Function Introduction

Sports Mode (10 sports modes such as outdoor running and walking)

Step Counting Mode (Record total step number, mileage and calorie)

Sleep Mode (Record total sleep time, deep sleep time and light sleep time)

Heart Rate Mode (Measure the current heart rate and record the highest, lowest and the previous heart rate)

Alarm Clock Reminder (Enter More Operations / Alarm Clock Settings on the APP to set alarm clock)

Music Control (Control and play mobile music)

Find Your Phone (Find your phone via watch within Bluetooth connection range)

Camera Control (Enter More Operations / Camera on the APP, and shake to control)

Women's Health (set and remind safe period)

Notes for Safety and Product Information

1.Battery Alarm

Do not damage battery via shape items, and do not disassemble it without authorization;

2.Health Alarm

If you are wearing implantable electronic devices such as pacemakers, please consult your doctor before heart rate measurement;
Equipped optical heart rate sensor flashes green light. If you have epilepsy or are sensitive to flickering light, please consult your doctor whether you can use the product;
The device will track your daily activities according to the sensor with the aim of offering data involving your daily activities such as steps, mileage, calorie, sleep and heart rate. Please note that they may not be completely accurate;
The device, accessories, heart rate sensor and other related data are for entertainment and fitness, instead of medical purpose. They can't help you diagnose, monitor, treat and prevent any disease or symptom. The heart rate data is for reference only. We aren't liable for all results caused by data deviation.

3.Traffic Safety

Please keep great judgement and ensure driving safety. Do not carry out all activities that may divert your attention; malfunction may occur due to the interference of radio. Please contact the manufacturer to consult about detailed information.

4.Operating Environment

Do not wear the watch when showing, diving and etc.;
Do not wear the watch too tight, and keep the part that touches skin dry;
Do not make kids or pets bite the device or its accessories to avoid any damage;
The watch isn't waterproof to acid, alkaline solutions, chemical reagent and other corrosive liquid;
Please use the device within 0-35℃. Too high or too low environment temperature may bring device malfunctions.

5.Declaration of Conformity

The device conforms to FCC Part 15. All operations should match the following two conditions:
1)The device won't lead to any harmful interference;
2)The device must accept all interference that can be received, including all interface that may lead to unnecessary operations.

All changes or modifications that aren't clearly approved by the compliance party may make users fail to operate the device. According to FCC Part 15, the device has passed test. It conforms to the limitations of class B digital device with the aim of offering reasonable protection and avoiding all harmful interference brought by equipment in the house. The device generates, uses and radiates r-f energy, so improper installation and use may bring harmful interference to radio communication. We can't ensure that the installation in the specific environment may not generate any interface.

If the device truly brings harmful interference to radio or television reception, please turn the device on or off to check. Encourage users to try the following measures to correct such interference:
-- Relocate the receiving antenna;
-- Increase the distance between the device and receiver;
-- Connect the device to a socket (different from the socket used by receptor);
-- Consult the agency or experienced technician to get help.

The device conforms to EU ROHS standards. Please refer to IEC 62321, EU ROHS directive 2011/65/EU and Recised directive.

6.Safety Warnings

Unauthorized battery change will lead to explode;
Please handle used battery according to the following descriptions:

Do not dispose old battery and residual wastes together. Please deal with them separately. It is free to handle them at the public collection station. Owners of old appliances should be responsible for bringing them to collection stations or similar stations. A little personal efforts make contributions to the recycle of valuable raw materials and handling of harmful substances.

Company
Shenzhen Huafurui Technology Co., Ltd.

Address
Unit 1401 &1402, 14/F, Jin qi zhi gu mansion (No. 4 building of Chong wen Garden), Crossing of the Liu xian street and Tang ling road, Tao yuan street, Nan shan district, Shenzhen, 518055, P.R. China

Scan here to download

H Band

FCC Statement

1. This device complies with Part 15 of the FCC Rules. Operation is subject to the following two conditions:

(1) This device may not cause harmful interference.

(2) This device must accept any interference received, including interference that may cause undesired operation.

2. Changes or modifications not expressly approved by the party responsible for compliance could void the user's authority to operate the
equipment.

NOTE:

This equipment has been tested and found to comply with the limits for a Class B digital device, pursuant to Part 15 of the FCC Rules.

These limits are designed to provide reasonable protection against harmful interference in a residential installation.

This equipment generates uses and can radiate radio frequency energy and, if not installed and used in accordance with the instructions,
may cause harmful interference to radio communications. However, there is no guarantee that interference will not occur in a particular
installation. If this equipment does cause harmful interference to radio or television reception, which can be determined by turning the
equipment off and on, the user is encouraged to try to correct the interference by one or more of the following measures:

Reorient or relocate the receiving antenna.

Increase the separation between the equipment and receiver.

Connect the equipment into an outlet on a circuit different from that to which the receiver is connected.

Consult the dealer or an experienced radio/TV technician for help.

Body-worn Operation

This device was tested for typical body-worn operations. To comply with RF exposure requirements, a minimum separation distance
of 5mm must be maintained between the user’s body and the handset, including the antenna. Third-party belt-clips, holsters,
and similar accessories used by this device should not contain any metallic components. Body-worn accessories that do not meet these
requirements may not comply with RF exposure requirements and should be avoided. Use only the supplied or an approved antenna.