Test report issued under the responsibility of:
EMITECH MONTPELLIER laboratory
MRA US-EU Designation Number: FR0006
Canadian CAB Identifier: FR0003

RF EXPOSURE REPORT

KDB 447498 D01
FCC part 15

Company	**TRAXENS SA**
Address.....	HELIOPOLIS III 16 rue Louis Leprince Ringuet 13013 MARSEILLE FRANCE
Test item description.	**Smart container tracker**
Trade Mark.	TRAXENS V2 POWER
Manufacturer.	TRAXENS SA
Model/Type reference.....	BOX0022
Ratings.....	12Vdc to 24Vdc / 12Vac to 24Vac 50Hz-60Hz
Testing Laboratory	**EMITECH MONTPELLIER laboratory**
Address.....	145 rue de Massacan 34740 VENDARGUES FRANCE
Report Reference No.....	**R412-19-103221-9A**
Test procedure.	FCC IC Verification (SDoc procedure)
Diffusion.....	Mr FARADI
Applicant's name.	TRAXENS SA
Date of issue.....	April 1, 2020
Total number of pages.....	14
Revision.	0
Modified page(s).....	Creation
Compiled by.....	Olivier HEYER
Approved by (+ signature).....	David MONTAULON (Technical Manager)

Duplication of this test report is only permitted for an integral photographic facsimile. It includes the number of pages referenced here above. This document is the result of testing a specimen or a sample of the product submitted. It does not imply an assessment of the conformity of the whole manufactured products of the tested sample.

REPORT INDEX:

1. GENERAL INFORMATIONS 3
2. REFERENCE DOCUMENT(S) 3
3. EQUIPMENT TECHNICAL DESCRIPTION 4
3.1. GENERAL INFORMATION 4
3.2. EUT MARKING PLATE 4
3.3. EUT GENERAL VIEW 5
3.4. EUT MECHANICAL AND ELECTRICAL DESIGN 5
3.5. EUT INPUT/OUTPUT PORTS 6
3.6. EUT RADIO SPECIFICATIONS 7
4. EUT INFORMATION 9
5. RF EXPOSURE 10
6. MEASUREMENT UNCERTAINTY 10
7. TEST CONDITIONS AND RESULTS 11
7.1. RADIATED EMISSIONS (TRANSMITTER) 11

REVISION HISTORY:

Revision	Date	Modified pages	Modifications
0	April 1, 2020	/	Creation

1. GENERAL INFORMATIONS

This document submits the RF exposure analysis on the equipment **TRAXENS V2 POWER** (denominated hereafter E.U.T.: equipment under test) according to document(s) listed in §2 of this test report.

APPLICANT'S GENERAL INFORMATIONS:

Company name..... : TRAXENS SA
Company address. ..... : HELIOPOLIS III
16 rue Louis Leprince Ringuet
13013 MARSEILLE
FRANCE
Person(s) present during the tests. ..... : Mr. FARADI and Mr. CERVERA
Responsible. ..... : Mr FARADI

DEFINITIONS AND ABBREVIATIONS:

E.U.T.	Equipement under test	AE	Ancillary equipment	Pk	Peak detector
RBW	Resolution bandwidth	VBW	Video bandwidth	QP	Quasi-peak detector
OATS	Open area test site	FAR	Full anechoic room	Av	Average detector
VP	Vertical Polarization	HP	Horizontal Polarization	RMS	Root Mean Square
RF	Radio frequency	NTR	Nothing to report		

2. REFERENCE DOCUMENT(S)

NORMATIVE REFERENCES:

The following referenced documents are necessary for the application of the present test report.

KDB 447498 D01
General RF Exposure Guidance

FCC part 15
Code of federal regulations. Title 47- Telecommunication Chapter 1- Federal Communication Commission. Part 15- Radio frequency devices Subpart B- Unintentional Radiators. Limits and methods of measurement of radio disturbance. Characteristic of information technology equipment

OET Bulletin 65 Ed. 97-01
Evaluating Compliance with FCC Guidelines for Human Exposure to Radiofrequency Electromagnetic Fields

Although the product standard uses obsolete technical standards, the latest versions of standards achievable by the laboratory will be used for testing.

INFORMATIVE REFERENCES:

The following referenced documents are not necessary for the application of the present report but they assist the user with regard to a particular subject area.

3. EQUIPMENT TECHNICAL DESCRIPTION

3.1. General information

Test item description. ..... :	Smart container tracker
Model/Type reference..... :	BOX0022
Trade Mark. ..... :	TRAXENS-BOX V2 POWER
Serial number (S/N)..... :	0020201929000003
Part number (P/N). ..... :	Not communicated
Software version..... :	V1.6
Firmware version. ..... :	Not communicated
Type of sample. ..... :	Pre-serial
Function(s)..... :	Smart container tracker
Manufacturer name. ..... :	TRAXENS SA
Address..... :	Les Baronnies - Bât. C - 15 rue Marc Donadille 13453 MARSEILLE CEDEX 13 FRANCE

General product information:

N/A

3.2. EUT Marking plate

3.3. EUT General view

3.4. EUT Mechanical and Electrical Design

Power supply. ..... : 24Vdc
Power supply range. ..... : 12Vdc to 24Vdc / 12Vac to 24Vac 50Hz-60Hz
Power type. ..... : AC & DC
Power (W). ..... : 3.6
Nominal current (A). ..... : Not communicated
Dimensions (L x W x H) (m). ..... : 220x92x60mm
Weight (kg). ..... : 0.430
Temperature range (°C). ..... : 85°C to -40°C
Ground bounding strap. ..... : No

Comments:

N/A

3.5. EUT Input/Output ports

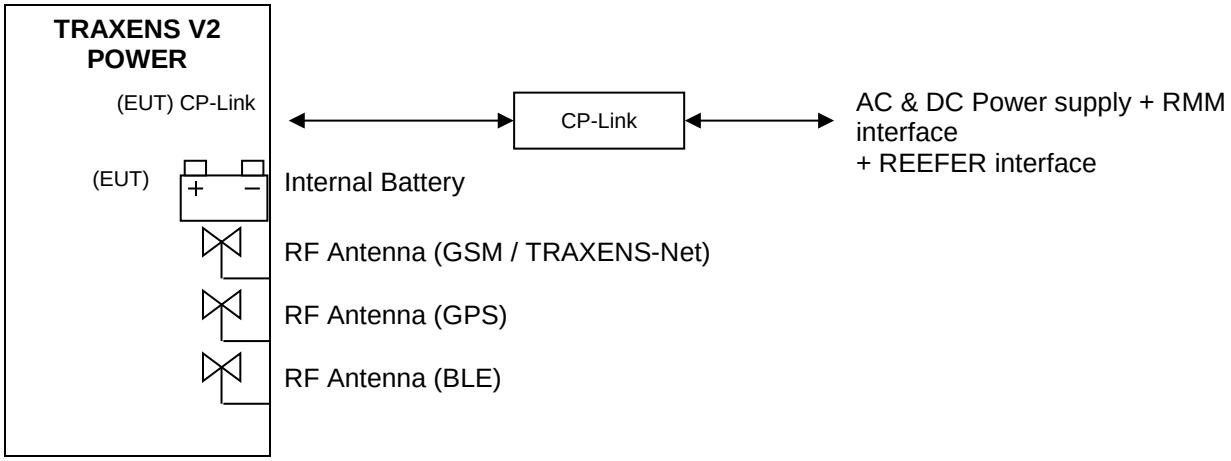

PORT	NAME	TYPE	LENGHT	CABLE TYPE	COMMENTS
0	Main frame	N/E	N/A	Plastic	N/A
1	AC & DC Power supply + RMM interface + REEFER interface	AC/DC /IO	40cm	Not shielded	Input Voltage supply = 12Vdc to 24Vdc
2	Internal Battery	DC	N/A	N/A	7.2Vdc
3	RF Antenna	RF	N/A	N/A	GSM / TRAXENS-NET
4	RF Antenna	RF	N/A	N/A	Bleutooth
5	RF Antenna	RF	N/A	N/A	GPS

AC/DC : AC/DC Converter port
AC .....: Alternative current port
DC ..... : Discontinuous current port
I/O.....: Input or Output port
TP.....: Telecommunication port
RF..... : Radio frequency port
N/E .....: Non Electrical port

3.6. EUT Radio Specifications

a) GENERAL INFORMATIONS	
According to manufacturer's declarations :	
EUT type..... :	SRD
Technology ..... :	TRAXSENS-Net / GPS / GPRS - GSM / BLE
Environmental profile..... :	Data transmissions
Temperature range..... :	85° to -40°C
Antenna type ..... :	Internal
Antenna Gain..... :	Not communicated
Comments:	

a) TRANSMITTER PARAMITTERS (TX)	
Frequency bands..... :	TRAXENS-Net: 902MHz to 928 MHz BLE: 2400MHz to 2483.5MHz GPRS-2G: GSM850: 824.2 MHz to 848.8 MHz GSM900: 880 MHz to 915 MHz GSM1800: 1710.2 MHz to 1784.8 MHz GSM1900: 1850.2 MHz to 1909.8 MHz UMTS-3G: Band 1: 1920 MHz to 1980 MHz Band 4: 1710 MHz to1755 MHz LTE-4G: Band 1: 1920 MHz to 1980 MHz Band 2: 1850 MHz to 1910 MHz Band 4: 1710 MHz to1755 MHz Band 7: 2500 MHz to 2570 MHz Band 12: 699 MHz to 716 MHz
RF Power..... :	TRAXENS-Net: 15dBm
Number of channels / Separation..... :	Not communicated
Modulation type ..... :	TRAXENS-Net: GMSK
Duty cycle ..... :	N/A
Tested frequency..... :	TRAXENS-Net: 924 MHz GPRS-2G: GSM850: 837MHz GSM900: 904MHz GSM1800: 1750MHz GSM1900: 1869.8MHz UMTS-3G: Band 1: 1923.7MHz LTE-4G: Band 2: 1874.7MHz Band 4: 1728MHz Band 7: 2730MHz Band 12: 710MHz

b) RECEIVER PARAMETERS (RX)	
Frequency bands. ..... :	TRAXENS-Net: 902MHz to 928 MHz BLE: 2400MHz to 2483.5 MHz GPRS-2G: GSM850: 869.2 MHz to 893.8 MHz GSM900: 925 MHz to 960 MHz GSM1800: 1805.2 MHz to 1879.8 MHz GSM1900: 1930.2 MHz to 1989.8 MHz UMTS-3G: Band 1: 2110 MHz to 2170 MHz Band 4: 2110 MHz to 2155 MHz LTE-4G: Band 1: 2110 MHz to 2170 MHz Band 2: 1930 MHz to 1990 MHz Band 4: 2110 MHz to 2155 MHz Band 7: 2620 MHz to 2690 MHz Band 12: 729 MHz to 746 MHz GPS: 1559MHz to 1610MHz
Category/Class ..... :	Not communicated
Bandwidth ..... :	Not communicated

4. EUT INFORMATION

EUT LABEL

a) DEVICES INCLUDING MODULAR TRANSMITTER(S) (§15.212):
If the FCC identification number is not visible when the module is installed inside another device, then the outside of the device into which the module is installed must also display a label referring to the enclosed module. This exterior label can use wording such as the following: *"Contains Transmitter Module FCC ID: XYZMODEL1" or "Contains FCC ID: XYZMODEL1."* Device under test includes single modular transmitter(s): TRAXENS-Net radio module: **FCC ID: 2AHZ6WING4TRAX** **IC: 25616-W4T** GSM, UMTS, LTE radio module: **FCC ID: QIPPLS62W** **IC: 7830A-PLS62W** BLE Radio module: **FCC ID: 2AHZ6TRBV2** **IC: 25616-TRBV2**

5. RF EXPOSURE

See details of test results in tests reports ref R412-19-103221-7A Ed.0 and R412-19-103221-8A Ed.0

TEST(S) PERFORMED	FREQUENCY (MHZ)	EIRP (DBM)	EIRP (MW)	PSD AT 20CM (MW/CM2)	LIMIT (MW/CM2)
BLE	2440.0	8.47	7,03	0,001398773	1,000
Traxens-net	924.0	5,10	3,24	0,000643769	0,616
2G – Band 850	837.0	7,52	5,65	0,001123906	0,558
2G – Band 900	904.0	6,57	4,54	0,000903088	0,603
2G – Band 1800	1750.0	2,79	1,90	0,000378208	1,000
2G – Band 1900	1869.8	6,28	4,25	0,000844754	1,000
3G – B1	1992.0	14,80	30,20	0,006008003	1,000
4G – B12	710.0	10,45	11,09	0,002206633	0,473
4G – B2	1874,6	-4,10	0,39	7,73981E-05	1,000
4G – B4	1728,1	-7,20	0,19	3,79079E-05	1,000
4G – B7	2536.0	-5,20	0,30	6,008E-05	1,000

6. MEASUREMENT UNCERTAINTY

PARAMETER	MAXIMAL EMITECH UNCERTAINTY	MINIMAL STANDARD UNCERTAINTY
Radio frequency	± 1 x 10^{-7}	±1 x 10^{-7}
RF power, conducted		
RF power	± 0.8dB	± 1 dB
Power spectral density	± 2.3dB	± 3 dB
Occuped bandwidth		
RF power	± 3.8 %	± 5 %
Conducted emission (spurious)		
f ≤ 1 GHz	± 0.8 dB	± 3 dB
1 GHz - 12.75 GHz	± 1.6 dB	
Radiated emission (magnetic field)		
9kHz – 30MHz	± 3 dB	± 6 dB
Supply voltages	± 3 %	± 3 %
Temperature	± 1 °C	± 1°C
Humidity	± 5 %	± 5 %
Time / Duty cycle	± 4.4 %	± 5 %
Radiated emission (electric field for FCC standard)		
9kHz – 30MHz	± 2.7 dB	/
30MHz – 1GHz	± 5.0 dB	/
1GHz – 18GHz	± 5.6 dB	/
18GHz – 26GHz	± 5.7 dB	/
26GHz – 40GHz	± 5.7 dB	/

For the calcul of expanded uncertainty, the confidence interval is 95 % (k=2).

7. TEST CONDITIONS AND RESULTS

7.1. Radiated emissions (transmitter)

Reference standard:	FCC part 15 Radio part 15.247 and RSS-247
Test method:	FCC part 15.109, 15.209, 15.205, 15.215 RSS-247, CNR Gen
General test setup: EUT is set on an insulating support at 80cm(f<1GHz), 150cm(f>1GHz)cm above the ground reference plane. Measurement are done on a normalized test site by the substitution method. The test antenna is oriented in the two polarizations (vertical and horizontal), and the product is rotated at 360° in the horizontal plane (See photo(s) for initial position of the EUT(0°)). If applicable the test antenna was raised and lowered through the specified range of height until a maximum signal level is detected. For portable equipements a research of maximum level is done on the 3 axes. Only the highest levels are recorded.	

TESTED CONFIGURATION
Tx mode – Bluetooth Low Energy
Tx mode - Traxens-net
Tx mode - 4G - Band 12 - for freq > 1GHz
Tx mode - 2G - Band 850 for freq > 1GHz
Tx mode - 2G - Band 900 for freq > 1GHz
Tx mode - 2G - Band 1900 for freq > 1GHz
Tx mode - 2G - Band 1800 for freq > 1GHz
Tx mode - 3G - Band 1 for freq > 1GHz
Tx mode - 4G - Band 2 for freq > 1GHz
Tx mode - 4G - Band 4 for freq > 1GHz
Tx mode - 4G - Band 7 for freq > 1GHz

LABORATORY PARAMETERS:	REQUIRED PRIOR TO THE TEST	DURING THE TEST
Ambient Temperature	15 to 35 °C	*See Graph(es)*
Relative Humidity	20 to 75 %	*See Graph(es)*
Atmospheric pressure	N/A	*See Graph(es)*
TEST METHOD DEVIATION: N/A		
Supplementary information: N/A		

TEST EQUIPMENT USED					
CATEGORY	BRAND	TYPE	IDENTIFIER	CAL. DATE	CAL. DUE
Antenna	ETS-Lindgren	3117	5456	23/07/2019	23/09/2022
Antenna	ETS-Lindgren	3117	8387	23/07/2019	23/09/2022
Antenna	ETS lindgren	3142E	14523	29/11/2018	29/01/2020
Antenna	Rohde & Schwarz	HL223	3126	13/06/2018	13/08/2021
Cable	TechniWAVE	N-0.23m	14895	23/02/2018	23/04/2020
Cable	TechniWAVE	N-0.23m	14898	23/02/2018	23/04/2020
Cable	STORM MICROWAVE	N-1.5m	10263	29/10/2018	29/12/2020
Cable	SUCOFLEX	N-3m	14378	25/06/2019	25/08/2021
Cable	SUCOFLEX	N-3m	14379	25/06/2019	25/08/2021
Cable	MegaPhase	N-3m	14852	29/10/2018	29/12/2020
Cable	MegaPhase	N-3m	14853	12/02/2018	12/04/2020
Cable	SUCOFLEX	N-6,5m	14380	19/07/2017	19/09/2019
Cable	MegaPhase	N-8m	15813	12/11/2018	12/01/2021
Cable	MegaPhase	TM18-N1N1-118	12841	09/05/2018	09/07/2020
Cable	MegaPhase	TM18-N1N1-118	12842	09/05/2018	09/07/2020
Filter	Emitech	300 Hz-3KHz	1418		
Filter	Micro-Tronics	HPM 11630	4392	30/10/2018	30/12/2020
Filter	Micro-Tronics	HPM 15162	10273	11/01/2019	11/03/2021
Filter	Micro-Tronics	HPM18865	12843	08/06/2018	08/08/2020
Preamplifier	IMPULSE	CA118-546ACN	9169	29/10/2018	29/12/2019
Receiver	Agilent Technologies	E4440A	5824	18/04/2018	18/06/2020
Receiver	Agilent Technologies	E7405A	2161	10/10/2018	10/12/2020
Receiver	Rohde & Schwarz	ESI	9704	15/02/2019	15/04/2020
Shielded enclosure	RAY PROOF	C.V1	1123		
Shielded enclosure	RAY PROOF	C.V2	1423		
Shielded enclosure	COMTEST	SAC 3m	14494	14/02/2017	14/04/2020
Software	Nexio		0000		
Thermohygrometer	Testo	608-H1	7561	25/01/2019	25/03/2021
Thermohygrometer	Testo	608-H1	7562	25/01/2019	25/03/2021
Thermohygrometer	Testo	608-H2	12269	27/11/2017	27/01/2020
Thermohygrometer	Bioblock Scientific	Météostar	0963	25/01/2019	25/03/2021

BAT-EMC software version: V3.18.0.26 Blank cells = Permanent validity

TEST SETUP PHOTO(S) – EUT POSITION FOR FREQ< 1GHZ
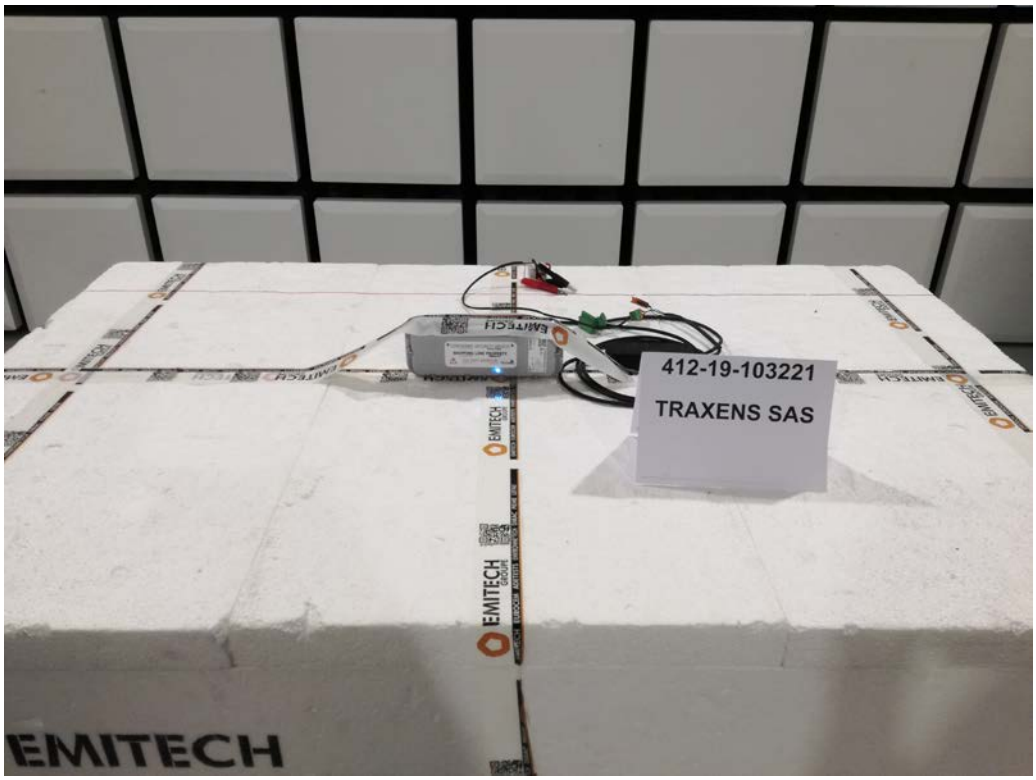

TEST SETUP PHOTO(S) – EUT POSITION FOR FREQ > 1GHZ

TEST SETUP PHOTO(S) – 200MHZ < FREQ < 1GHZ
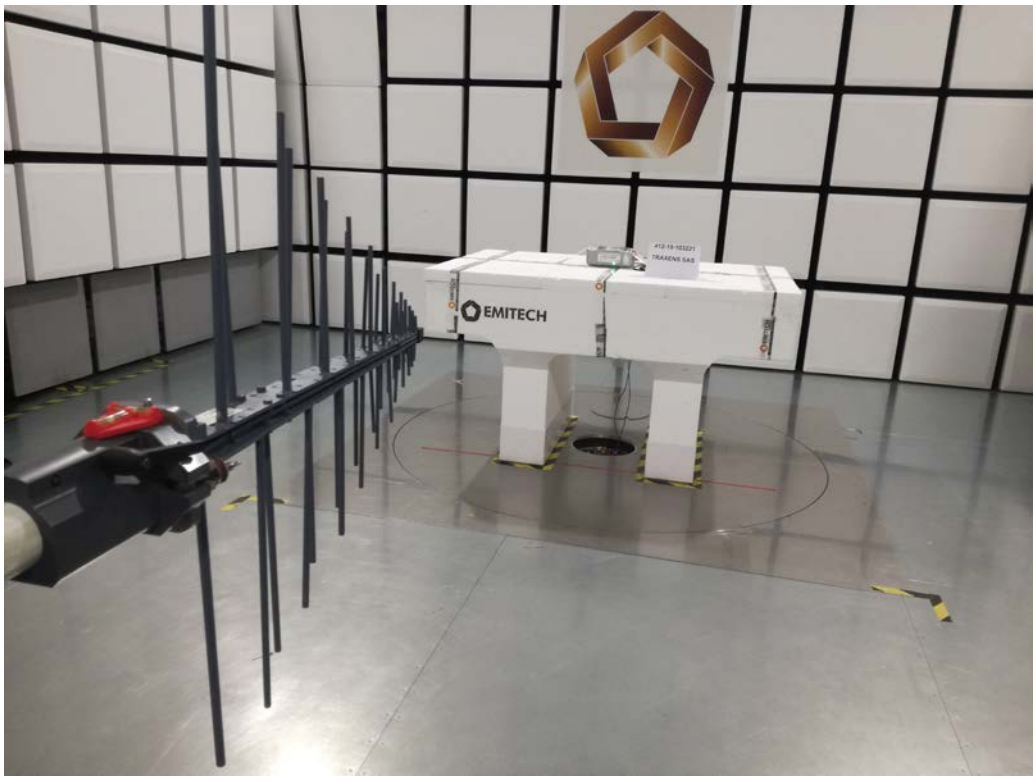

TEST SETUP PHOTO(S) - FREQ > 1GHZ
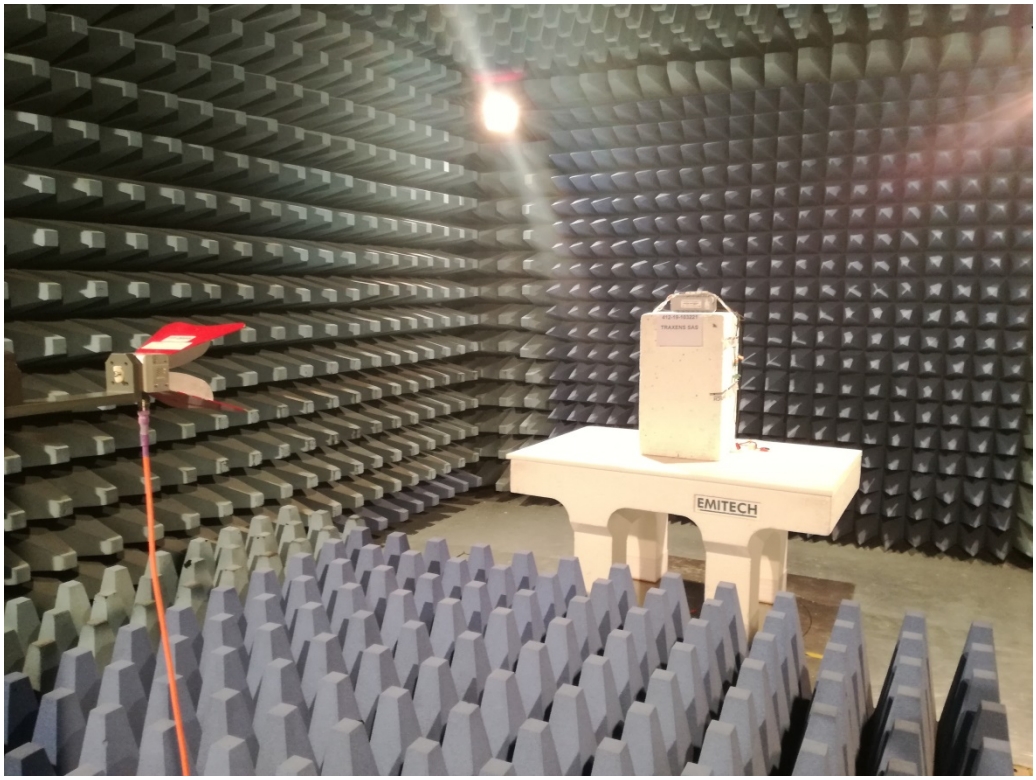

End of report