Trouble shooting

PROBLEM	CAUSE/SOLUTION
No sound	Cancel mute/increase the volume
Unable to play a disc	The disc is badly dirty or damaged.
Disc cannot be inserted	Wait until the temperature returns to within normal limit.
Disc cannot be ejected	No disc inside/ press the EJECT button/ press the RESET button
The unit is not working	Press the RESET button.
Sound Skips	The disc is badly dirty or damaged.
	Improper installation of the unit, keep the installed angle within 45° from flat horizontal position
Unable to receive stations	Make sure whether the antenna is properly connected/ antenna ground or not.

Note:

If any of the problems persist after check list has been made, consult your nearest service dealers.

OPERATING INSTRUCTIONS

CAR STEREO
DIGITAL MEDIA PLAYER

Gratitude

Thank you for purchasing our in-car MP3/CD player. Integrated with comprehensive software and hi-fi stereo, our reliable product presents you outstanding audio effect and premium entertainment.

Cautions

- Do not expose the vesicle to direct sunlight, and avoid the risk of overheating.
- If there is no power supply, check through all the wire connection and fuse.
- Antenna automatically extends when this unit is turned on,if your car has auto-antenna.
- Shut down the power before remove the key to be more power saving.

Should you have any other questions that are not mentioned in this manual, please contact our company or the nearest agents. Your feedback and advices is highly appreciated.

Humidity Notice

During rainy days and in damp areas, the moisture could remain in the lens and finally cause malfunction.
In such case, please take the disc out from the compartment and switch to FM mode until the water evaporated.

Maintain the Audio Effect

Get the most of this device and protect the unit or disc from being stained in the lens and deteriorated in the audio effect,do not drink near the audio device.

Warnings

- Make sure the power is shut down before installation and removal.

CONTENTS

Precautions ____ 1
Contents ____ 2
Main Functions ____ 3
Disc Handling ____ 3
Panel Indication ____ 4
Radio Tuner Operations ____ 5
Play a Disc ____ 6
Other Functions ____ 7
Installation ____ 8
Wiring Diagram ____ 9
Specifications & Bluetooth ____ 10
Trouble Shooting ____ 11

Main Functions

CD/MP3/USB/SD card player
Anti-shock system
Super anti-interference digital FM Tuner
Auto-saved 18 stations(FM 18)
Time display
Bluetooth(Optional)

Panel lighting function
Max output 50Wx4
Digital volume control
RCA out
AUX in
Auto-saved 12 stations(AM 12) optional

Disc Handling

Eject the disc before shut down the unit and keep the loading time within 120 minutes so as to protect the lifespan of the pickup. Skipping sound occurs when a dirty or damaged disc is inserted. In order to obtain the best audio effect please pay attention to the following tips:

Please take the edge of the disc merely to keep it clean.

Do not place discs under direct sunlight or other heating source. Avoid the risk of overheating, do not leave it in car for a long time during hot weather.

Do not put stickers or adhesive tape on discs.

Wipe the disc outward from the center.

Do not use any solvents such as alcohol and diluents nor any detergent and antistatic spray which will damage the device/discs.

Second-hand and hackney discs with glue on the surface could stop the spinning of the discs and even cause malfunction in pickup.

Panel Indication

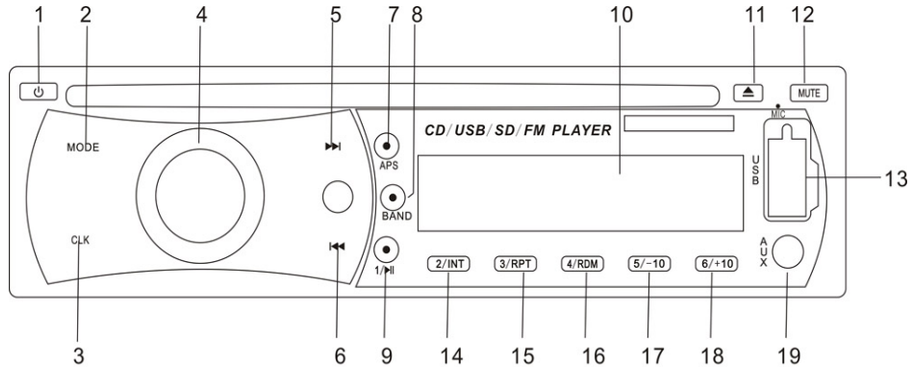

1.Power Button
2.Mode Selector
3.Clock
4.Volume Knob
5.Next/Tuning scan forward
6.PRE/Tuning scan backward
7.APS(File selector)
8.Band Tuning
9.Storing Station/Pause Button
10.LCD Display
11.Eject Button
12.Mute Button
13.USB Jack
14.Storing Station/Fast playback 10s Button
15.Storing Station/Repeat Button
16.Storing Station/Random Button
17.Storing Station/Play Track -10 Button
18.Storing Station/ Play Track +10 Button
19.AUX in
20.SD card slot(behind)

Radio Tuner Operations

Mute

1. In radio mode or disc playing , press the MUTE button to make it silent.
2. Press MUTE again to unmute.
3. Press and hold this button to control LOUD, the second long press to exit.

Manual Search

In radio mode, press ⏮ or ⏭ button continuously for tuning a station downward or upward respectively. Press and hold the button for 2 seconds, the radio searches from the current frequency and checks the signal until station received.

Storing Stations

While receiving a station and want to store in memory, press and hold any digits button amount 1-6 for 2 seconds, station will be stored at this number. The previous station saved before will be erased.

Automatic Search

In radio mode, press APS button to automatically search the stations from the lowest frequency to the highest one. And the station frequency can be stored accordingly.

Play a Disc

This unit can support CD/MP3 . If the disc is too scratched to load, it will automatically switch to FM mode to protect the device.

While playing the disc, press PLAY button on the panel to pause.
If the disc is still inside the compartment, memory function can continue playing from shut down position.

Press [⏏] to eject the disc, the unit meanwhile automatically swifts from video-audio to FM.

While playing disc, short press ⏭ to skip to the next track & press ⏮ to skip back one track. When press and hold these two buttons, the speed of fast forward/ reverse changes as X2, X4, X8, X20.

Play a Disc

Insert and play a CD, press the digit button on the panel for selection.
For example, press [10+] button and [7] button to select the 17th track.

Play a MP3

Insert and play a MP3 disc, press [10+] button and [7] button to select the 17th track. It takes 3 seconds to play the music.

Play from a SD and USB Storage Device

This unit is compatible with SD, MMC, USB, MP3 player etc.
1.Insert the SD or USB , the unit auto-play contents in the card or device.

2.When there exists MP3 and MP4 format in the USB or SD simultaneously, press the PRE ← or NEXT → button to choose desired contents and press PLAY/ENTER button to confirm.

3.Track Selection: When there exist multiple folders in the USB/SD, long press FF, FB to choose desired contents and press PLAY/ENTER button to confirm.

Play Bluetooth (Optional function)

1.In the Bluetooth mode,Press MODE button to hang up the incoming call. Press BAND button to answer the call. Long press BAND button to redial the call.

2.When playing music in the Bluetooth mode,Press 1/▶II button for Pause / Play .
Press SEEK+ button for Last track, SEEK- for Next track.

Other Functions

Mute

1. In radio mode or disc playing , press the MUTE button to make it silent.
2. Press MUTE again to unmute.
3. Press and hold this button to control LOUD, the second long press to exit.

Audio Control

In radio mode or disc playing, press SEL to show volume, BAS, TRE, BAL, FRD, adjust the volume by rotating the SEL button on the panel or pressing VOL+& VOL- on remote.

1.Volume ranges from 0 to 40.

2.BAS ranges from -7 to +7.

3.TRE ranges from -7 to +7.

4.BAL ranges from L7 to R7.

5.FRD ranges from F7 to R7.

EQ Measurement

In radio mode or disc playing, press and hold SEL to simulate different EQ of the music styles, like POPS, ROCK, CLASSIC & FLAT. Corresponding indication is shown on the LCD screen.

Clock Display Setting

1.In radio mode or disc playing, press DSP button to show the time.

2.Long press CLK button to enter time setting page. Roate the volume button to input HOUR in the cursor position.Press volume button goes for Minute setup.Press CLK again to resume after settling.

Installation

Cautions:

1.It is highly recommended that installation conducted by professionals.

2.Please carefully install the unit in appropriate position so as not to obstruct regular driving.

3.Do not allow this unit to come into contact with high temperature, dirt, dust, liquids, oil and electrical shock.

4.Power: DC11-13.8V. Never wire the negative speaker cable directly to ground. Load Impedance: 4-8Ω.

5.Please install the unit according to the wiring info and use the authorized parts only for your safety.

6.Composed of head unit and external hardware case, this unit is designed to be theftproof. Please connect the power, speaker and antenna according to the wire connecting diagram properly. Fix the hardware case in the car as the following picture.

(Note: The front panel of this unit is detachable.)

For the detailed operation, please refer to the following tips.

DETACHING THE FRONT PANEL

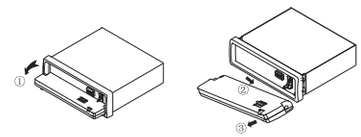

Before detaching the front panel. Make sure to power off the unit.
Press ⏏ to loosen the panel and slide it to the right side to release the panel and then pull it off towards you.

REPLACING THE FRONT PANEL

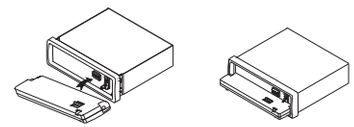

First, insert the right side of the front panel into the main unit. Push the right side of the panel until it locks firmly with the main unit meanwhile insert the left side of the panel into the main unit.

PRECAUTIONS

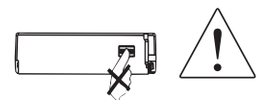

Do not touch the plug on the front panel or the unit body directly to avoid electronical shock. Please clean the unit with clean and dry cloth in case there is dirt or dust.

Wiring Diagram

Before installation, please connect the cables according to the following diagram.

For 12V CD Player:

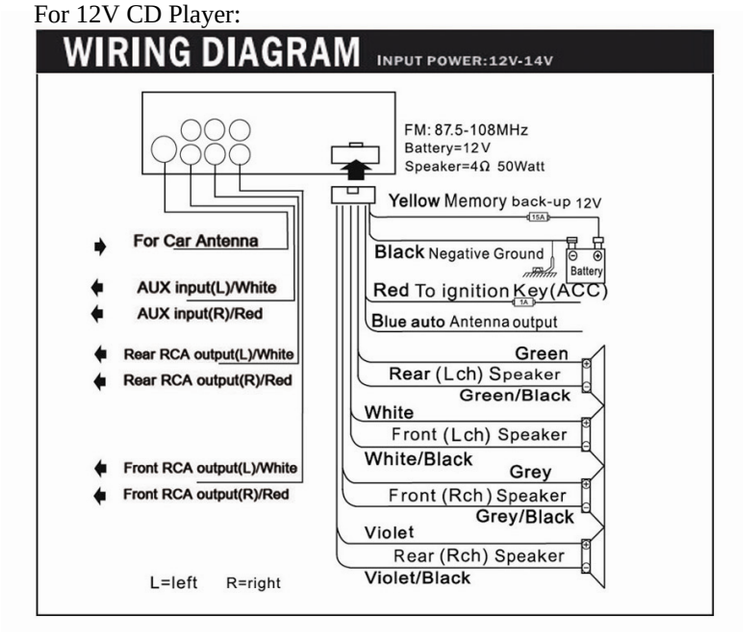

For 24V CD Player with ISO cable:

CAUTION ⎓ 24V NEGATIVE GROUND
SPEAKER IMPEDANCE: 4~ 8 Ω

FREQUENCY RANGE FM 87.5MHz —— 108MHz
AM 522kHz —— 1620kHz

OUTLET WIRES CONNECTION

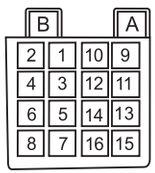

No.	LINE COLOR	FUNCTION
3	GRAY/BLACK	FRONT RIGHT-
4	GRAY	FRONT RIGHT+
5	WHITE/BLACK	FRONT LEFT-
6	WHITE	FRONT LEFT+
11	YELLOW	B + (24V)
15	BLACK	GND
16	RED	ACC (24V)

MADE IN CHINA

Specifications

TUNER SECTION
FM ..... 87.5-108.0 MHz
Antenna ..... External receiver
Intermediate Frequency..... .....10.7MHz
Usable Sensitivity..... .....14dB
Harmonic Distortion.....(1KHz)<1%
Degree of Dissociation..... (1KHz)30dB
SNR.....60dB
Frequency Response.....30~15000Hz
AM.....522kHz-1620kHz (Optional function)

AUDIO SECTION
Output .....Speaker
Load Impedance 4-8R
SNR ..... 65dB (A)
Max power output ..... 50W X 4(4R)

General
RCA audio output ..... 1.2V max
Antenna control .....12V(500mA) /24V(500mA)
Tone control ..... BASS ± 7dB(100KHz)
TRE ± 7dB(100KHz)
Anti-shock..... CD:12-15s , MP3:2minutes

Accessories are provided together with the unit.
Note: Specification and design are subject to modification without notice.

Bluetooth (Optional function)

Press “Mode”, “POW”, “MUTE” or “AMS” buttons to hang up the phone.

Press “Band” , “CLK” buttons to answer the phone

Press “Mode” button on the unit to change to BT mode, then turn on the Bluetooth option in your mobile and choose “CAR BT” for connecting the unit. Once the Bluetooth is connected, “EON” will be shown on the LCD.

This device complies with Part 15 of the FCC Rules. Operation is subject to the following two conditions: (1) this device may not cause harmful interference, and (2) this device must accept any interference received, including interference that may cause undesired operation.

Changes or modifications not expressly approved by the party responsible for compliance could void the user's authority to operate the equipment.

NOTE: This equipment has been tested and found to comply with the limits for a Class B digital device, pursuant to Part 15 of the FCC Rules. These limits are designed to provide reasonable protection against harmful interference in a residential installation. This equipment generates, uses instructions, may cause harmful interference to radio communications. However, there is no guarantee that interference will not occur in a particular installation. If this equipment does cause harmful interference to radio or television reception, which can be determined by turning the equipment off and on, the user is encouraged to try to correct the interference by one or more of the following measures:

-- Reorient or relocate the receiving antenna.

-- Increase the separation between the equipment and receiver.

-- Connect the equipment into an outlet on a circuit different from that to which the receiver is connected.

-- Consult the dealer or an experienced radio/TV technician for help.