iSenseTek Technology, Inc

Approval Sheet

Model : 1506 Wireless Module (nRF52832)

Part No : ISBLE1506-P52832ACA

Datasheet Version : v1.4

Date : 2021/07/21

Approved	Checked	Designed

Customer Name : _____

Model : _____

P/N : _____

Checked	Received

Index

1. Overall Introduction.....3
   1.1 Applications.....3
   1.2 Features.....4
2. P/N Number Define.....5
3. Module Descriptions.....6
   3.1 Product Dimensions.....6
   3.2 Pin Descriptions.....6
   3.3 PCB Layout Guide.....9
4. Main Chip Solution.....9
5. Shipment Packing Information.....10
6. Specification.....11
   6.1 Absolute Maximum Ratings.....11
   6.2 Operation Conditions.....12
   6.3 Electrical Specifications.....12
   6.3.1 General Radio Characteristics.....12
   6.3.2 Radio current consumption.....12
   6.3.3 Transmitter Specifications.....13
   6.3.4 Receiver Specifications.....13
   6.3.5 Radio Timing Parameters.....14
   6.3.6 RSSI Specifications.....14
   6.3.7 CPU.....15
   6.3.8 Power Management.....16
7. Development Kit.....17
8. Antenna Forbidden Zone Description.....18
9. Reference Circuit.....19
   9.1 Schematic with Internal LDO.....19
   9.2 Schematic with Internal DC/DC Converter.....19
10. SMT Reflow Baking Guide.....20
11. Statement.....21
12. Document History.....23

1. Overall Introduction

iSenseTek's ISBLE series is a wireless module designed based on Nordic Semiconductor solution. The module include printed antenna, frequency on the 2.4GHz band. And support low energy or BLE function. Please see below of the feature:

- Based on the Nordic nRF52832 SoC
- Multiple protocol of BLE & RF 2.4GHz & ANT + upon customer preference
- Dimension:

Length	Width	Height
15 ± 0.3mm	6 ± 0.3mm	1.7 ± 0.2mm

- Low power requirements: Ultra-low peak, Average and idle mode power Consumption
- Compatible with a large installed based of mobiles phones, tablets and computers
- Fully coverage of wireless applications
- BLE & RF transmission switching may help products to fit all operation system
- BLE & RF transmission switching may help products to fit all kinds of hardwares

1.1 Applications

Computer peripherals and I/O devices

- Mouse
- Keyboard
- Multi-touch trackpad

Interactive entertainment devices

- Remote control
- Gaming controller

Beacons

Personal area networks

- Health/fitness sensor and monitor devices
- Medical devices
- Key-fobs + Wrist watch
- Remote control toys

1.2 Features

2.4GHz transceiver

- -96 dBm sensitivity in Bluetooth® low energy mode
- 1 Mbps, 2 Mbps supported data rates
- TX Power -20 to +4 dBm in 4 dB steps
- RSSI (1 dB resolution)

ARM® Cortex™-M4 32 bit processor with FPU,64MHz

- Serial Wire Debug (SWD)

Memory

- 512 kB embedded flash program memory
- 64 kB RAM

Flexible Power Management

- Supply voltage range 1.8 V to 3.6 V
- Fast wake-up using 64 MHz internal oscillator
- 0.7 µA at 3 V in OFF mode
- 1.0 µA at 3 V in OFF mode with 32 kB RAM retention
- 1.9 µA at 3 V in ON mode, no RAM retention, wake on RTC

Nordic Soft Device ready

Digital microphone interface (PDM)

12-bit, 200 ksps ADC - 8 configurable channels with programmable gain

32 General Purpose I/O Pins

5x 32-bit timers with counter mode

Up to 3x SPI master/slave

64 level comparator

Temperature sensor

Up to 2x I2C compatible 2-Wire master/slave

UART (CTS/RTS) with EasyDMA

Autonomous peripheral operation without CPU intervention using PPI

Quadrature Decoder (QDEC)

AES HW encryption

3x real-time counter (RTC)

2. P/N Number Define

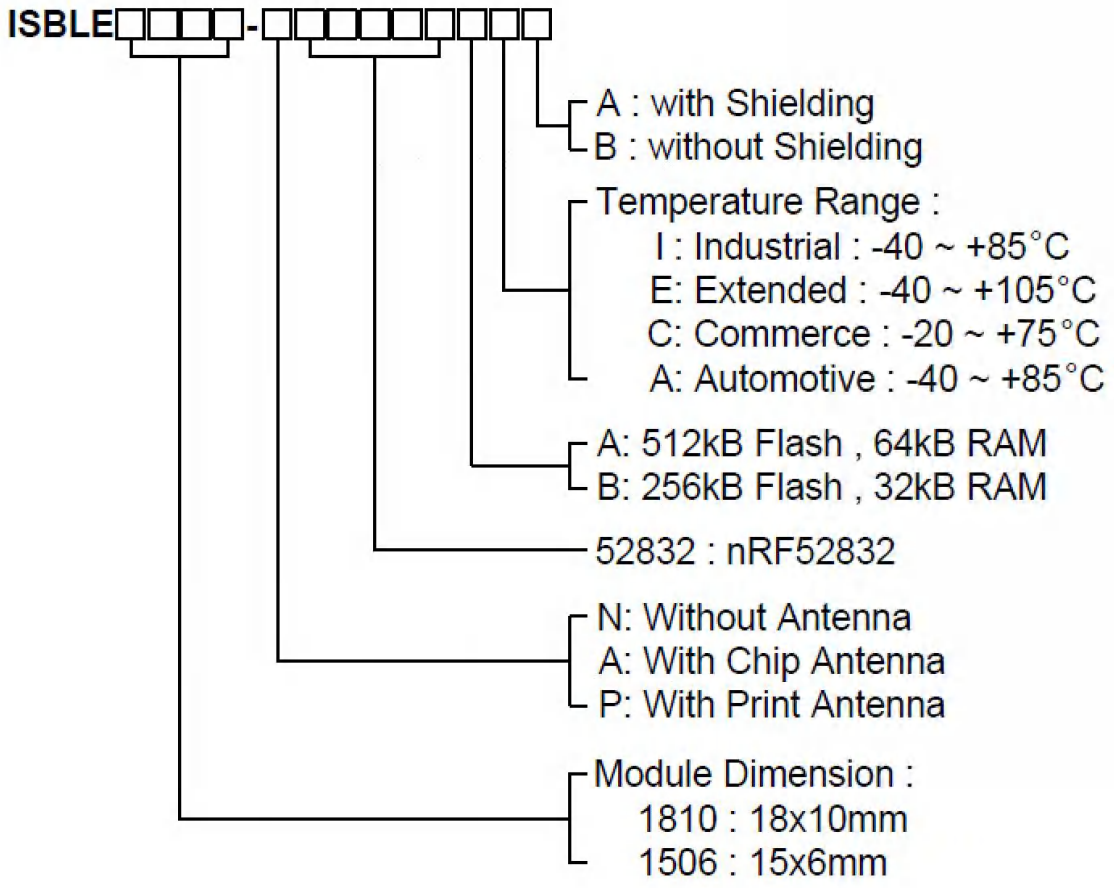

Figure 1 : P/N Number Define

3. Module Descriptions

3.1 Product Dimensions

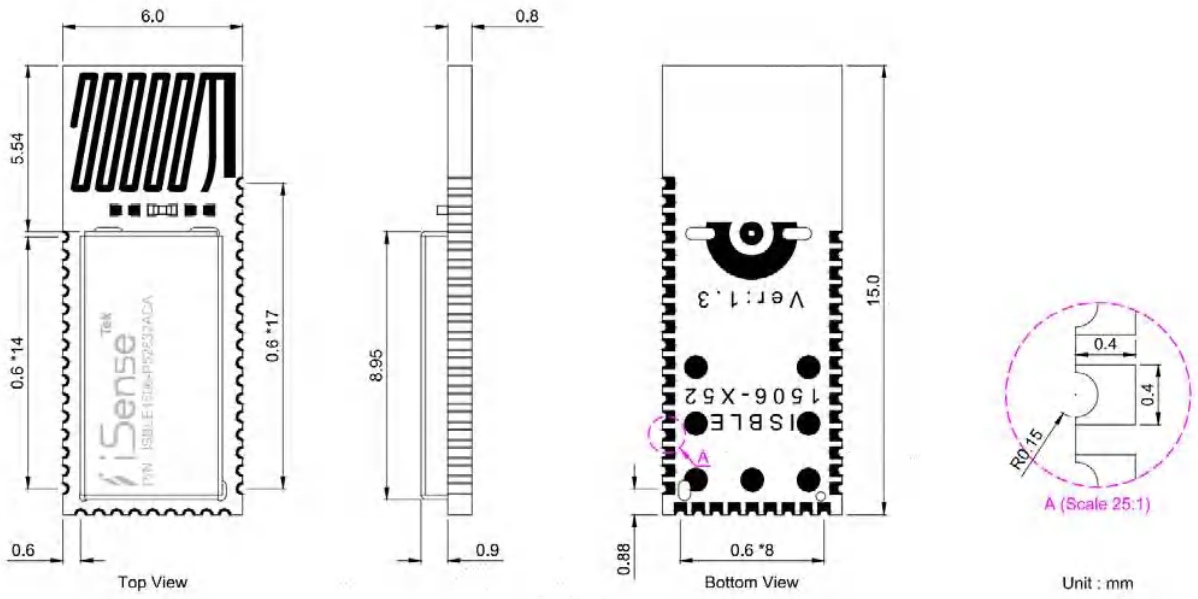

Figure 2 : Product Dimensions

3.2 Pin Descriptions

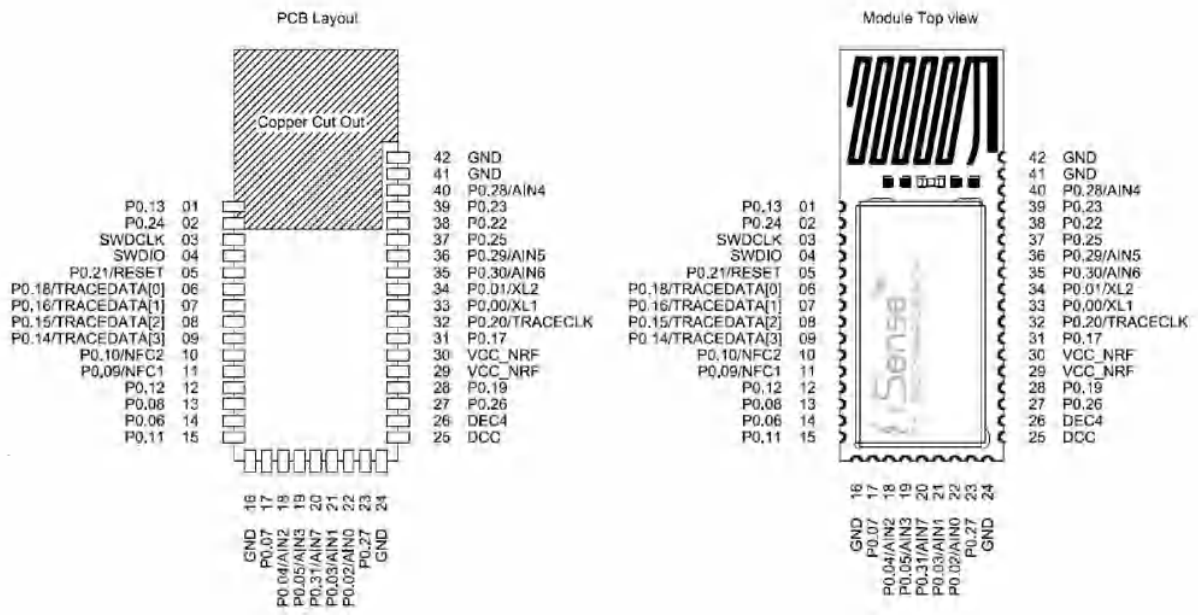

Figure 3 : Module Pin Descriptions

Pin NO.	Name	Pin function	Description
1	P0.13	Digital I/O	General-purpose digital I/O
2	P0.24	Digital I/O	General-purpose digital I/O
3	SWDCLK	Digital input	Serial wire debug clock input for debug and programming
4	SWDIO	Digital I/O	Serial wire debug I/O for debug and programming
5	P0.21 RESET	Digital I/O	General-purpose digital I/O Configurable as pin reset
6	P0.18 TRACEDATA[0]	Digital I/O	General-purpose digital I/O Trace port output
7	P0.16 TRACEDATA[1]	Digital I/O	General-purpose digital I/O Trace port output
8	P0.15 TRACEDATA[2]	Digital I/O	General-purpose digital I/O Trace port output
9	P0.14 TRACEDATA[3]	Digital I/O	General-purpose digital I/O Trace port output
10	P0.10 NFC2	Digital I/O NFC input	General-purpose digital I/O NFC antenna connection
11	P0.09 NCF1	Digital I/O NFC input	General-purpose digital I/O NFC antenna connection
12	P0.12	Digital I/O	General-purpose digital I/O
13	P0.08	Digital I/O	General-purpose digital I/O
14	P0.06	Digital I/O	General-purpose digital I/O
15	P0.11	Digital I/O	General-purpose digital I/O
16	GND	Ground	The pad must be connected to a solid ground plane
17	P0.07	Digital I/O	General-purpose digital I/O
18	P0.04 AIN2	Digital I/O Analog input	General-purpose digital I/O SAADC/COMP/LPCOMP input
19	P0.05 AIN3	Digital I/O Analog input	General-purpose digital I/O [illegible]
20	P0.31 AIN7	Digital I/O Analog input	General-purpose digital I/O SAADC/COMP/LPCOMP input
21	P0.03 AIN1	Digital I/O Analog input	General-purpose digital I/O SAADC/COMP/LPCOMP input
22	P0.02 AIN0	Digital I/O Analog input	General-purpose digital I/O SAADC/COMP/LPCOMP input
23	P0.27	Digital I/O	General-purpose digital I/O
24	GND	Ground	The pad must be connected to a solid ground plane

Pin NO.	Name	Pin function	Description
25	DCC	Power	Power supply
26	DEC4	Power	Power supply
27	P0.26	Digital I/O	General-purpose digital I/O
28	P0.19	Digital I/O	General-purpose digital I/O
29	VCC_NRF	Power	Power supply
30	VCC_NRF	Power	Power supply
31	P0.17	Digital I/O	General-purpose digital I/O
32	P0.20 TRACECLK	Digital I/O	General-purpose digital I/O Trace port clock output
33	P0.00 XL1	Digital I/O Analog input	General-purpose digital I/O Connection for 32.768 kHz crystal (LFXO)
34	P0.01 XL2	Digital I/O Analog input	General-purpose digital I/O Connection for 32.768 kHz crystal (LFXO)
35	P0.30 AIN6	Digital I/O Analog input	General-purpose digital I/O SAADC/COMP/LPCOMP input
36	P0.29 AIN5	Digital I/O Analog input	General-purpose digital I/O SAADC/COMP/LPCOMP input
37	P0.25	Digital I/O	General-purpose digital I/O
38	P0.22	Digital I/O	General-purpose digital I/O
39	P0.23	Digital I/O	General-purpose digital I/O
40	P0.28 AIN4	Digital I/O Analog input	General-purpose digital I/O SAADC/COMP/LPCOMP input
41	GND	Ground	The pad must be connected to a solid ground plane
42	GND	Ground	The pad must be connected to a solid ground plane

Table 1 : Pin function

3.3 PCB Layout Guide

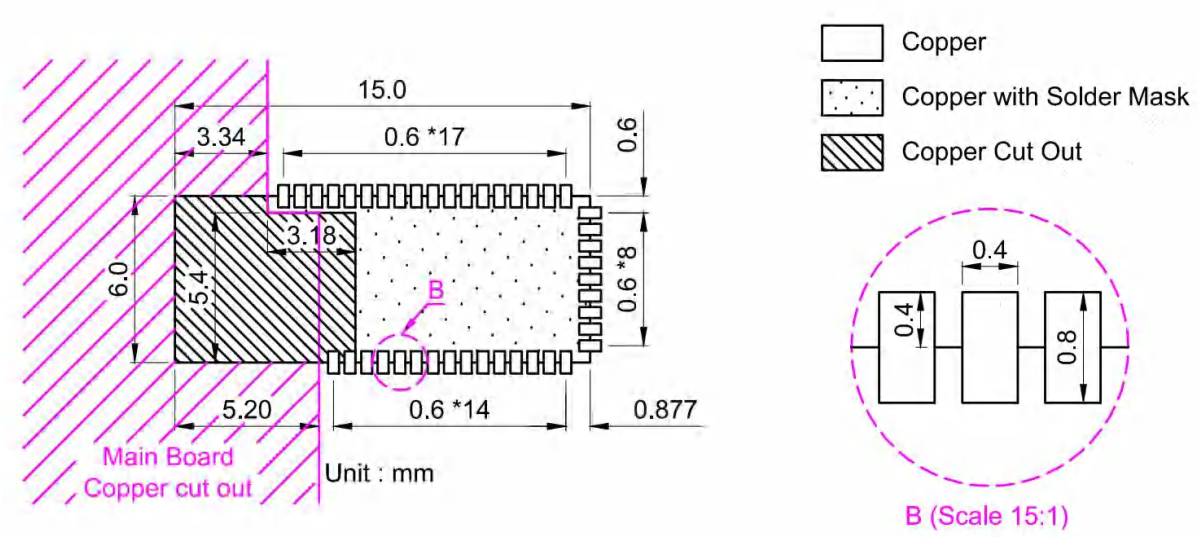

Figure 4 : PCB Layout Guide

4. Main Chip Solution

RF IC	Crystal Frequency
Nordic nRF52832-CIAA	32MHz

Table 2 : Main Chip Solution

5. Shipment Packing Information

Part Number	Package
ISBLE1506-P52832ACA	500 PCS/BOX

Table 3 : Shipment Packing Information

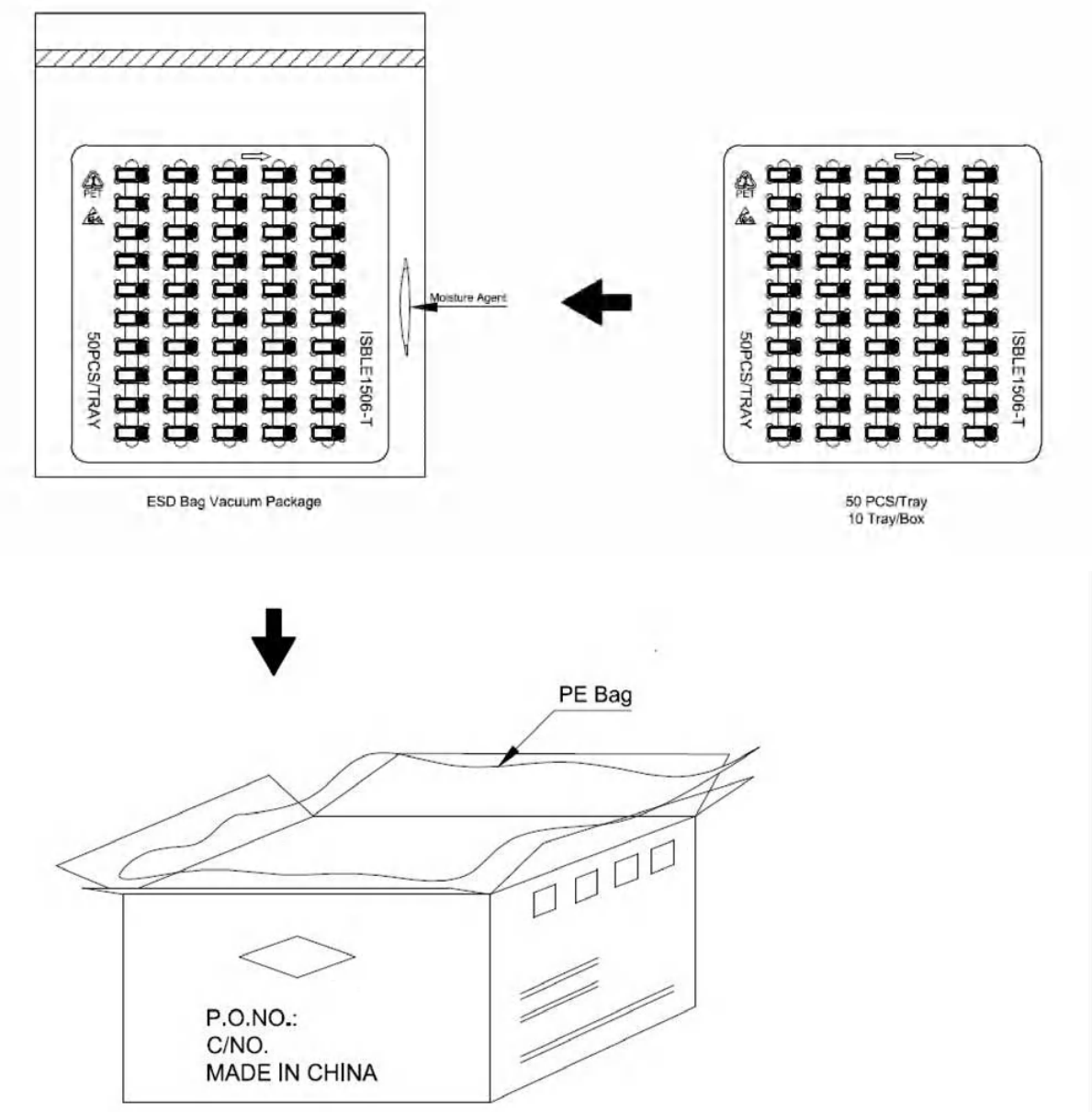

Figure 5 : Packing Information

6. Specification

6.1 Absolute Maximum Ratings

Maximum ratings are the extreme limits the chip can be exposed to without causing permanent damage. Exposure to absolute maximum ratings for prolonged periods of time may affect the reliability of the chip.

Symbol	Min.	Max.	Units
Supply voltages			
VDD	-0.3	+3.9	V
VSS		0	V
I/O pin voltage			
V_{Io}, VDD ≤ 3.6V	-0.3	VDD+0.3	V
V_{Io}, VDD > 3.6V	-0.3	3.9	V
NFC antenna pin current			
$I_{NFC1/2}$		80	mA
Radio			
RF input level		10	dBm
Environmental QFN48 package			
Storage temperature	-40	+125	°C
MSL		2	
ESD HBM		4	kV
ESD CDM		1000	V
Environmental WLCSP package			
Storage temperature	-40	+125	°C
MSL		1	
ESD HBM		2	kV
ESD CDM		500	V
Flash memory			
Endurance	10000		Write / erase cycles
Retention	10 years at 40°C		

Table 4 : Absolute Maximum Ratings

6.2 Operation Conditions

Symbol	Parameter	Notes	Min.	Typ.	Max.	Units
VDD	Supply voltage, independent of DCDC enable		1.7	3.0	3.6	V
t_{R_VDD}	Supply rise time (0 V to 1.7 V)				60	ms
T_A	Operating temperature		-40	25	85	°C

Table 5 : Operating conditions

6.3 Electrical Specifications

6.3.1 General Radio Characteristics

Symbol	Description	Min.	Typ.	Max.	Units
f_{OP}	Operating frequencies	2360		2500	MHz
$f_{PLL,PROG,RES}$	PLL programming resolution		2		kHz
$f_{PLL,CH,SP}$	PLL channel spacing		1		MHz
$f_{DELTA,1M}$	Frequency deviation @ 1 Msps		±170		kHz
$f_{DELTA,BLE,1M}$	Frequency deviation @ BLE 1Msps		±250		kHz
$f_{DELTA,2M}$	Frequency deviation @ 2 Msps		±320		kHz
fsk_{SPS}	On-the-air data rate	1		2	Msps

Table 6 : General radio characteristics

6.3.2 Radio current consumption

Symbol	Description	Min.	Typ.	Max.	Units
$I_{TX,PLUS4dBM,DCDC}$	TX only run current (DCDC, 3V) PRF = +4 dBm		7.5		mA
$I_{TX,PLUS4dBM}$	TX only run current PRF = +4 dBm		16.6		mA
$I_{TX,0dBM,DCDC}$	TX only run current (DCDC, 3V)PRF = 0dBm		5.3		mA
$I_{TX,0dBM}$	TX only run current PRF = 0dBm		11.6		mA
$I_{TX,MINUS4dBM,DCDC}$	TX only run current DCDC, 3V PRF = -4dBm		4.2		mA
$I_{TX,MINUS4dBM}$	TX only run current PRF = -4 dBm		9.3		mA
$I_{TX,MINUS8dBM,DCDC}$	TX only run current DCDC, 3V PRF = -8 dBm		3.8		mA
$I_{TX,MINUS8dBM}$	TX only run current PRF = -8 dBm		8.4		mA
$I_{TX,MINUS12dBM,DCDC}$	TX only run current DCDC, 3V PRF = -12 dBm		3.5		mA
$I_{TX,MINUS12dBM}$	TX only run current PRF = -12 dBm		7.7		mA
$I_{TX,MINUS16dBM,DCDC}$	TX only run current DCDC, 3V PRF = -16 dBm		3.3		mA
$I_{TX,MINUS16dBM}$	TX only run current PRF = -16 dBm		7.3		mA

Symbol	Description	Min.	Typ.	Max.	Units
$I_{TX,MINUS20dBM,DCDC}$	TX only run current DCDC, 3V PRF = -20 dBm		3.2		mA
$I_{TX,MINUS20dBM}$	TX only run current PRF = -20 dBm		7.0		mA
$I_{TX,MINUS40dBM,DCDC}$	TX only run current DCDC, 3V PRF = -40 dBm		2.7		mA
$I_{TX,MINUS40dBM}$	TX only run current PRF = -40 dBm		5.9		mA
$I_{START,TX,DCDC}$	TX start-up current DCDC, 3V, PRF = 4 dBm		4.0		mA
$I_{START,TX}$	TX start-up current, PRF = 4 dBm		8.8		mA

Table 7 : Radio current consumption

6.3.3 Transmitter Specifications

Symbol	Description	Min.	Typ.	Max.	Units
P_{RF}	Maximum output power.		4	6	dBm
P_{RFC}	RF power control range.		24		dB
P_{RFCR}	RF power accuracy.			±4	dB
$P_{RF1.1}$	1st Adjacent Channel Transmit Power 1 MHz		-25		dBc
$P_{RF2.1}$	2nd Adjacent Channel Transmit Power 2 MHz		-50		dBc
$P_{RF1.2}$	1st Adjacent Channel Transmit Power 2 MHz		-25		dBc
$P_{RF2.2}$	2nd Adjacent Channel Transmit Power 4 MHz		-50		dBc

Table 8 : Transmitter specifications

6.3.4 Receiver Specifications

Symbol	Description	Min.	Typ.	Max.	Units
$P_{RX,MAX}$	Maximum received signal strength at < 0.1% PER		0		dBm
$P_{SENS,IT,1M}$	Sensitivity, 1Msps nRF mode		-93		dBm
$P_{SENS,IT,SP,1M,BLE}$	Sensitivity, 1Msps BLE ideal transmitter, <=37 bytes BER=1E-3		-96		dBm
$P_{SENS,IT,LP,1M,BLE}$	Sensitivity, 1Msps BLE ideal transmitter >=128 bytes BER=1E-4		-95		dBm
$P_{SENS,IT,2M}$	Sensitivity, 2Msps nRF mode		-89		dBm

Table 9 : Receiver specifications

6.3.5 Radio Timing Parameters

Symbol	Description	Min.	Typ.	Max.	Units
t_{TXEN}	Time between TXEN task and READY event after channel FREQUENCY configured		140		us
$t_{TXEN,FAST}$	Time between TXEN task and READY event after channel FREQUENCY configured (Fast Mode)		40		us
$t_{TXDISABLE}$	Time between DISABLE task and DISABLED event when the radio was in TX and mode is set to 1Msps		6		us
$t_{TXDISABLE,2M}$	Time between DISABLE task and DISABLED event when the radio was in TX and mode is set to 2Msps		4		us
t_{RXEN}	Time between the RXEN task and READY event after channel FREQUENCY configured in default mode		140		us
$t_{RXEN,FAST}$	Time between the RXEN task and READY event after channel FREQUENCY configured in fast mode		40		us
t_{SWITCH}	The minimum time taken to switch from RX to TX or TX to RX (channel FREQUENCY unchanged)		20		us
$t_{RXDISABLE}$	Time between DISABLE task and DISABLED event when the radio was in RX		0		us
$t_{TXCHAIN}$	TX chain delay		0.6		us
$t_{RXCHAIN}$	RX chain delay		9.4		us
$t_{RXCHAIN,2M}$	RX chain delay in 2Msps mode		5		us

Table 10 : Radio timing

6.3.6 RSSI Specifications

Symbol	Description	Min.	Typ.	Max.	Units
$RSSI_{ACC}$	RSSI Accuracy Valid range -90 to -20 dBm		±2		dB
$RSSI_{RESOLUTION}$	RSSI resolution		1		dB
$RSSI_{PERIOD}$	Sample period		8		us

Table 11 : RSSI specifications

6.3.7 CPU

Symbol	Description	Min.	Typ.	Max.	Units
W_{FLASH}	CPU wait states, running from flash, cache disabled	0		2	
$W_{FLASHCACHE}$	CPU wait states, running from flash, cache enabled	0		3	
W_{RAM}	CPU wait states, running from RAM			0	
$I_{DDFLASHCACHE}$	CPU current, running from flash, cache enabled, LDO		7.4		mA
$I_{DDFLASHCACHEDCDC}$	CPU current, running from flash, cache enabled, DCDC 3V		3.7		mA
$I_{DDFLASH}$	CPU current, running from flash, cache disabled, LDO		8.0		mA
$I_{DDFLASHDCDC}$	CPU current, running from flash, cache disabled, DCDC 3V		3.9		mA
I_{DDRAM}	CPU current, running from RAM, LDO		6.7		mA
$I_{DDRAMDCDC}$	CPU current, running from RAM, DCDC 3V		3.3		mA
$I_{DDFLASH/MHz}$	CPU efficiency, running from flash, cache enabled, LDO		125		µA/ MHz
$I_{DDFLASHDCDC/MHz}$	CPU efficiency, running from flash, cache enabled, DCDC 3V		58		µA/ MHz
CM_{FLASH}	CoreMark, running from flash, cache enabled		215		CoreMark
$CM_{FLASH/MHz}$	CoreMark per MHz, running from flash, cache enabled		3.36		CoreMark MHz
$CM_{FLASH/mA}$	CoreMark per mA, running from flash, cache enabled, DCDC 3V		58		CoreMark mA

Table 12 : CPU

6.3.8 Power Management

Symbol	Description	Min.	Typ.	Max.	Units
I_{OFF}	System OFF current, no RAM retention		0.7		µA
I_{ON}	System ON base current, no RAM retention		1.2		µA
I_{RAM}	Additional RAM retention current per 4 KB RAM section		20		nA
t_{POR}	Time in Power on Reset after VDD reaches 1.7 V for all supply voltages and temperatures. Dependent on supply rise time.				
$t_{POR,10us}$	VDD rise time 10us		1		ms
$t_{POR,10ms}$	VDD rise time 10ms		9		ms
$t_{POR,60ms}$	VDD rise time 60ms		23		ms
t_{PINR}	If a GPIO pin is configured as reset, the maximum time taken to pull up the pin and release reset after power on reset. Dependent on the pin capacitive load (C)11: t=5RC, R = 13kOhm				
$t_{PINR,500nF}$	C = 500nF			32.5	ms
$t_{PINR,10uF}$	C = 10uF			650	ms
t_{R2ON}	Time from reset to ON (CPU [illegible])				
$t_{R2ON,NOTCONF}$	If reset pin not configured		tPOR		ms
$t_{R2ON,CONF}$	If reset pin configured		tPOR+ tPINR		ms
t_{OFF2ON}	Time from OFF to CPU execute			16.5	µs
$t_{IDLE2CPU}$	Time from IDLE to CPU execute			3.0	µs
$t_{EVTSET,CL1}$	Time from HW event to PPI event in Constant Latency System ON mode			0.0625	µs
$t_{EVTSET,CL0}$	Time from HW event to PPI event in Low Power System ON mode			0.0625	µs
I_{POF}	Current consumption when enabled		<4		µA
V_{POF}	Nominal power level warning thresholds (falling supply voltage). Levels are configurable between Min. and Max. in 100mV increments.	1.7		2.8	V
V_{POFTOL}	Threshold voltage tolerance		±1	±5	%

Table 13 : Power management

7. Development Kit

The ISBLE1506-EV is a versatile single board development kit for iSenseTek 1506 BLE module series. The kit gives access to all module I/O and interfaces via connectors and has 4 LEDs and 4 buttons which are user-programmable. Using the ISBLE1506-EV it enables setting up of a peer device that you can use to test the connection of your application, it provides a complete solution, allowing faster time to market.

Figure 6 : Development Kit for ISBLE1506

FEATURES
Support USB to UART for DTM use
All GPIO and interfaces available at edge connectors
Button *4 and LED *4
CR2032 battery holder *1
Support module test & program socket

8. Antenna Forbidden Zone Description

The PCB and mechanism design need to meet antenna forbidden zone description Table. Otherwise affect the efficiency of the antenna.

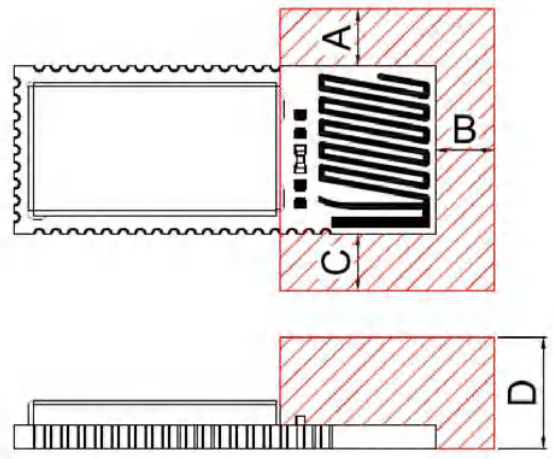

Figure 7 : Antenna Forbidden Zone Description

Material \ Dimension	A	B	C	D
FR4 (without Copper)	≧ 1mm	≧ 2mm	≧ 1mm	≧ 3mm
FR4 (with Copper)	≧ 2mm	≧ 6mm	≧ 2mm	≧ 6mm
Metal	≧ 2mm	≧ 6mm	≧ 2mm	≧ 5mm
Plastic	≧ 1mm	≧ 2mm	≧ 1mm	≧ 3mm

Table 14 : Antenna Forbidden Zone List

9. Reference Circuit

9.1 Schematic with Internal LDO

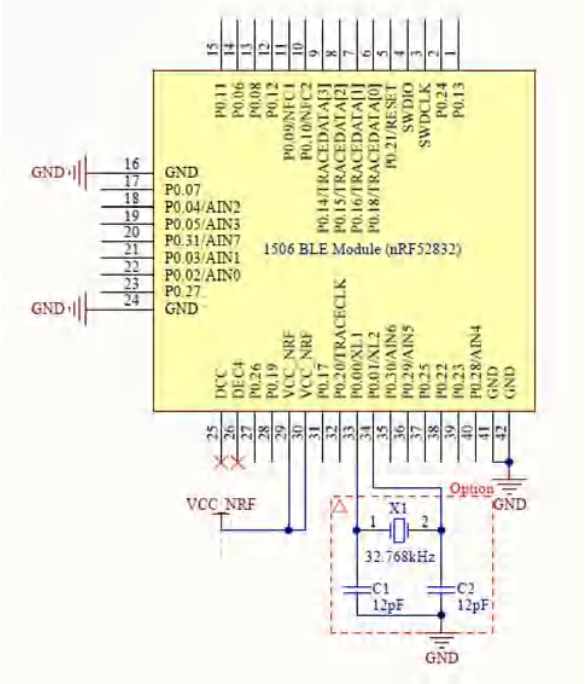

Figure 8 : Schematic with Internal LDO

9.2 Schematic with Internal DC/DC Converter

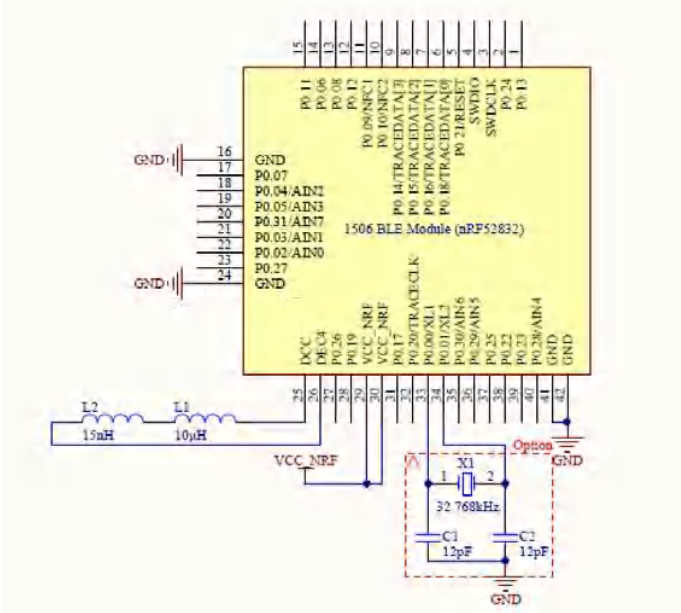

Figure 9 : Schematic with Internal DC/DC Converter

10. SMT Reflow Solder Guide

The reflow solder parameters for the Module shown in below figure and Table.

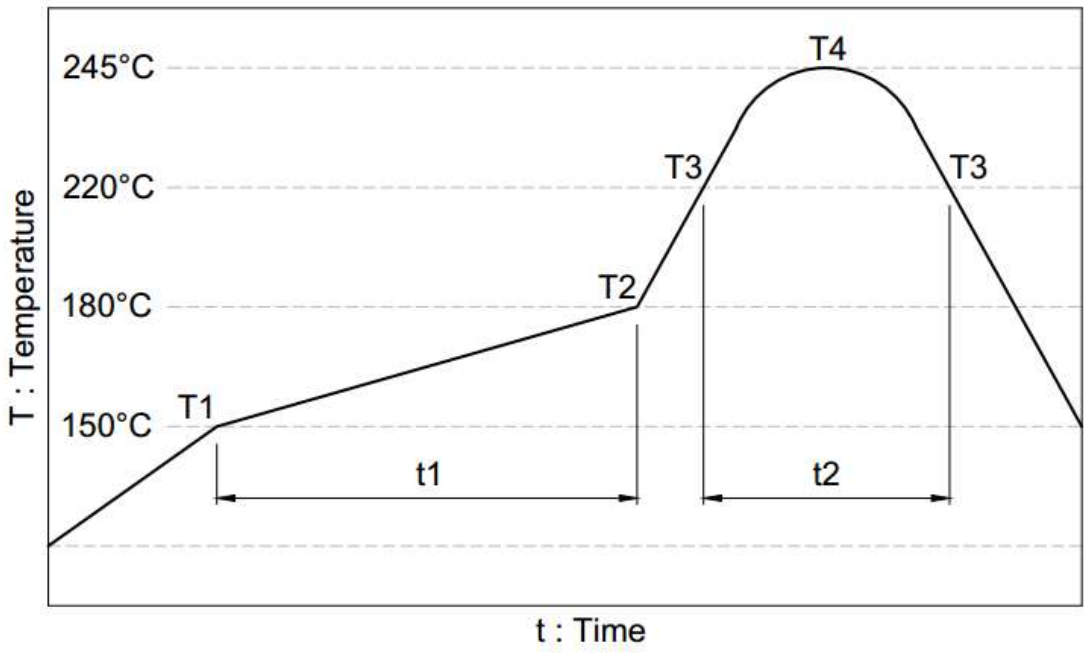

Figure 10 : Reflow Solder Guide

Solder Step	Temperature	Time
Ramp Rate	/	3°C / Second
Pre-Heat	T1 : 150°C ~ T2 : 180°C	t1 : 60~120 seconds
Soaking	T3 : 220°C	t2 : 30~90 seconds
Peak Temp.	T4 : 245±5°C	Within 20 seconds
Ramp Down Rate	/	6°C / Second (Maximum)

Table 15 : Reflow Solder Temp. List

11. Statement

FCC Statement:
This device complies with part 15 of the FCC Rules. Operation is subject to the following two conditions:
(1) This device may not cause harmful interference, and
(2) this device must accept any interference received, including interference that may cause undesired operation.
NOTE: This equipment has been tested and found to comply with the limits for a Class B digital device, pursuant to part 15 of the FCC Rules. These limits are designed to provide reasonable protection against harmful interference in a residential installation.
This equipment generates, uses and can radiate radio frequency energy and, if not installed and used in accordance with the instructions, may cause harmful interference to radio communications. However, there is no guarantee that interference will not occur in a particular installation.
If this equipment does cause harmful interference to radio or television reception, which can be determined by turning the equipment off and on, the user is encouraged to try to correct the interference by one or more of the following measures:
—Reorient or relocate the receiving antenna.
—Increase the separation between the equipment and receiver.
—Connect the equipment into an outlet on a circuit different from that to which the receiver is connected.
—Consult the dealer or an experienced radio/TV technician for help.
Changes or modifications not expressly approved by the party responsible for compliance could void the user's authority to operate the equipment.

This equipment complies with FCC radiation exposure limits set forth for an uncontrolled environment. This equipment should be installed and operated with a minimum distance of 20 cm between the radiator and a human body.

If theidentification number is not visible when the module is installed inside another device, then the outside of the device into which the module is installed must also display a label referring to the enclosed module, Contains FCC ID2AI2V-ISBLE1506X52
Co-location of this module with other transmitters that operate simultaneously are required to be evaluated using the multi-transmitter procedures.
The host integrator must follow the integration instructions provided in this document and ensure that the composite-system end product complies with the requirements by a technical assessment or evaluation to the rules and to KDB Publication 996369.
The host integrator installing this module into their product must ensure that the final composite product complies with the requirements by a technical assessment or evaluation to the rules, including the transmitter operation and should refer to guidance in KDB 996369.

ISED Statement:

This device contains licence-exempt transmitter(s) that comply with Innovation, Science and Economic Development Canada's licence-exempt RSS(s). Operation is subject to the following two conditions:
(1) this device may not cause interference,
(2) this device must accept any interference, including interference that may cause undesired operation of the device.

L'émetteur exempt de licence contenu dans le présent appareil est conforme aux CNR d'Innovation, Sciences et Développement économique Canada applicables aux appareils radio exempts de licence. L'exploitation est autorisée aux deux conditions suivantes :
(1) L'appareil ne doit pas produire de brouillage;
(2) L'appareil doit accepter tout brouillage radioélectrique subi, même si le brouillage est susceptible d'en compromettre le fonctionnement.

This equipment complies with ISED radiation exposure limits set forth for an uncontrolled environment. This equipment should be installed and operated with a minimum distance of 20 cm between the radiator and a human body.

Cet équipement est conforme aux limites d'exposition aux rayonnements ISED établies pour un environnement non contrôlé. Cet équipement doit être installé et utilisé avec une distance minimale de 20 cm entre le radiateur et un corps humain.

If the identification number is not visible when the module is installed inside another device, then the outside of the device into which the module is installed must also display a label referring to the enclosed module, Contains IC: 27665-1506X52
Si le numéro d'identification n'est pas visible lorsque le module est installé à l'intérieur d'un autre appareil, alors l'extérieur de l'appareil dans lequel le module est installé doit également afficher une étiquette faisant référence au module fourni, Contient IC : 27665-1506X52