iSense Tek Technology, Inc

Approval Sheet

Model : 1810 BLE Module (nRF52832)

Part No : ISBLE1810-P52832ACA

Datasheet Version : v2.4

Date : 2017/02/09

Approved	Checked	Designed

Customer name : _____

Model : _____

P/N : _____

Checked	Received

Index

1. Overall Introduction....3
   1.1 Applications....3
   1.2 Features....4
2. P/N Number Define....5
3. Module Description....5
   3.1 Product Dimensions....5
   3.2 Pin Descriptions....6
   3.3 PCB Layout Guide....8
4. Main Chip Solution....8
5. Shipment Packing Information....9
6. Specification....10
   6.1 Absolute Maximum Ratings....10
   6.2 Operation Conditions....10
   6.3 Electrical Specifications....11
   6.3.1 Radio Transceiver....11
   6.3.2 Transmitter Specifications....12
   6.3.3 Receiver Operation....12
   6.3.4 RX Intermodulation....12
   6.3.5 RX Selectivity....13
   6.3.6 Radio Timing....14
   6.3.7 RSSI Specifications....14
   6.3.8 CPU Performance....15
   6.3.9 Current Consumption, Sleep....15
7. Reference Circuit....16
   7.1 Schematic with Internal LDO....16
   7.2 Schematic with Internal DC/DC Converter....16
8. Development Kit....17
9. Antenna Forbidden Zone Description....18
10. RF Exposure Warning Statement....19
11. Document History....21

1. Overall Introduction

iSenseTek's ISBLE is a Bluetooth smart (Bluetooth low energy or BLE) module designed based on Nordic solution. The feature of the module.

- Based on the Nordic nRF52832 SoC
- Multiple protocol of BLE & RF 2.4GHz & ANT+ upon customer preference
- Dimension :

Length	Width	Height
18 ± 0.3mm	10 ± 0.3mm	1.95 ± 0.2mm

- Low power requirements, Ultra-low peak, Average and idle mode power Consumption
- Compatible with a large installed based of mobiles phones, tablets and computers
- Fully coverage of wireless applications
- BLE & RF transmission switching may help products to fit all operation system
- BLE & RF transmission switching may help products to fit all kinds of hardwares

1.1 Applications

Computer peripherals and I/O devices

- Mouse
- Keyboard
- Multi-touch trackpad

Interactive entertainment devices

- Remote control
- Gaming controller

Beacons

Personal area networks

- Health/fitness sensor and monitor devices
- Medical devices
- Key-fobs + Wrist watch
- Remote control toys
- Wearable device
- IoT network accessories

1.2 Features

2.4GHz transceiver

- -96 dBm sensitivity in *Bluetooth*® low energy mode
- GFSK at 1 Mbps, 2 Mbps supported data rates
- TX Power -20 to +4 dBm in 4 dB steps

ARM® Cortex™-M4F 32 bit processor

- Serial Wire Debug (SWD)

Memory

- 512 kB embedded flash program memory
- 64 kB RAM

Low current consumption

• TX only @ +4 dBm, 0 dBm @ 3V, DCDC enabled	7.5 mA, 5.3 mA
• TX only @ +4 dBm, 0 dBm	16.6 mA, 11.6 mA
• RX only @ 1 Mbps @ 3V, DCDC enabled	5.4 mA
• RX only @ 1 Mbps	11.7 mA
• CPU @ 64MHz from flash, from RAM	7.4 mA, 6.7 mA
• CPU @ 64MHz from flash, from RAM @ 3V, DCDC	3.7 mA, 3.3 mA
• System Off , On	0.7µA, 1.2 µA
• Additional current for RAM retention	20 nA / 4K block

On-air compatibility with nRF24L series

12 bit ADC/200KSPS - 8 configurable channels

31 General Purpose I/O Pins

NFC-A tag interface for OOB pairing

SPI Master/Slave

I2S audio interface

Low power comparator

Temperature sensor

Two-wire Master (I2C compatible)

UART (w/ CTS/RTS and DMA)

CPU independent Programmable Peripheral Interconnect (PPI)

Quadrature Decoder (QDEC)

128-bit AES HW encryption

5*32bit, 3*24bit Real Timer Counter (RTC)

2. P/N Number Define

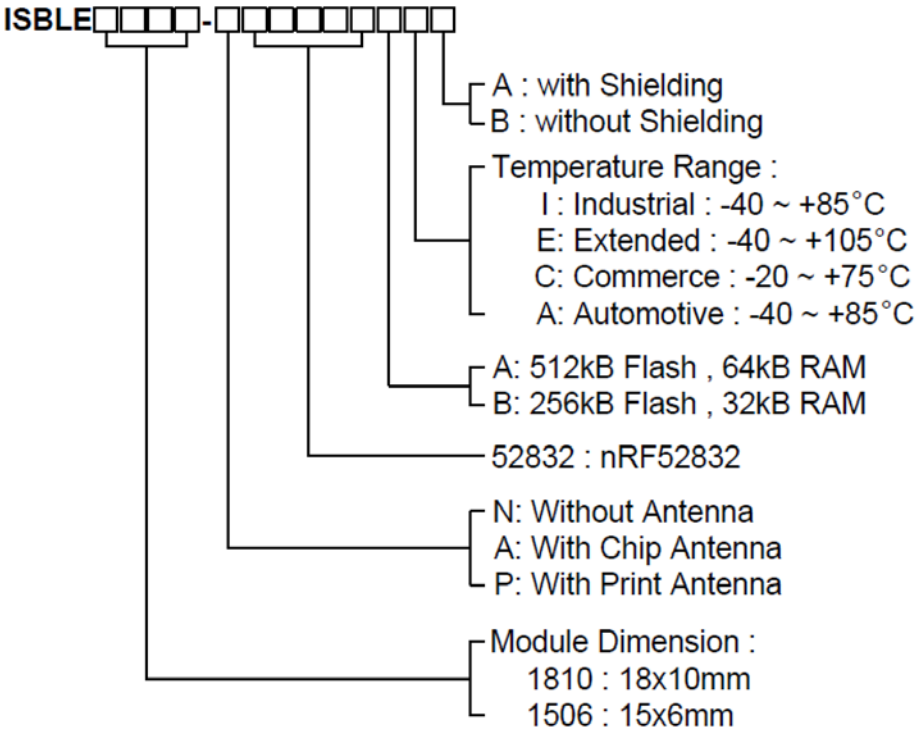

Figure 1 : P/N Number Define

3. Module Description

3.1 Product Dimensions

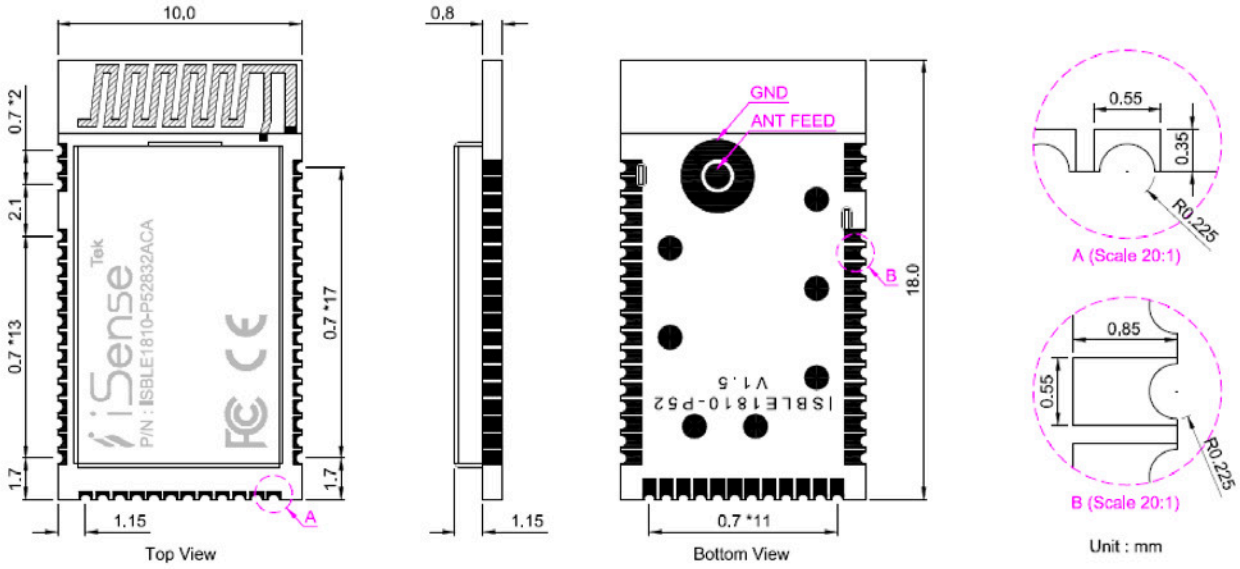

Figure 2 : Product Dimensions

3.2 Pin Descriptions

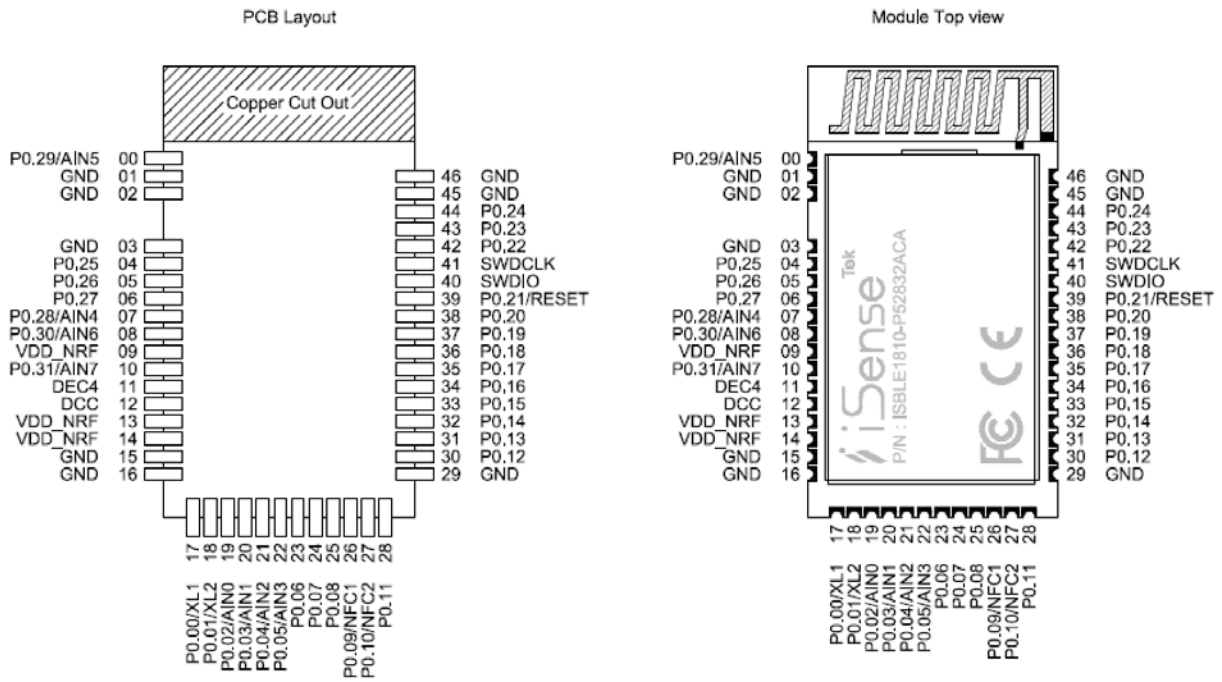

Figure 3 : Module Pin Descriptions

Pin NO.	Name	Pin function	Description
0	P.029	Digital I/O	General-purpose digital I/O
	AIN5	Analog input	ADC input 5
1	GND	Ground	The pad must be connected to a solid ground plane
2	GND	Ground	The pad must be connected to a solid ground plane
3	GND	Ground	The pad must be connected to a solid ground plane
4	P0.25	Digital I/O	General-purpose digital I/O
5	P0.26	Digital I/O	General-purpose digital I/O
6	P0.27	Digital I/O	General-purpose digital I/O
7	P0.28	Digital I/O	General-purpose digital I/O
	AIN4	Analog input	ADC input 4
8	P0.30	Digital I/O	General-purpose digital I/O
	AIN6	Analog input	ADC input 6
9	VDD_NRF	Power	Power supply
10	P0.31	Digital I/O	General-purpose digital I/O
	AIN7	Analog input	ADC input 7
11	DEC4	Power	Power supply
12	DCC	Power	DC/DC output voltage to external LC filter

Pin NO.	Name	Pin function	Description
13	VDD_NRF	Power	Power supply
14	VDD_NRF	Power	Power supply
15	GND	Ground	The pad must be connected to a solid ground plane
16	GND	Ground	The pad must be connected to a solid ground plane
17	P0.00	Digital I/O	General-purpose digital I/O
	XL1	Analog output	Connector for 32.768KHz crystal
18	P0.01	Digital I/O	General-purpose digital I/O
	XL2	Analog output	Connector for 32.768KHz crystal
19	P0.02	Digital I/O	General-purpose digital I/O
	AIN0	Analog input	ADC input 0
20	P0.03	Digital I/O	General-purpose digital I/O
	AIN1	Analog input	ADC input 1
21	P0.04	Digital I/O	General-purpose digital I/O
	AIN2	Analog input	ADC input 2
22	P0.05	Digital I/O	General-purpose digital I/O
	AIN3	Analog input	ADC input 3
23	P0.06	Digital I/O	General-purpose digital I/O
24	P0.07	Digital I/O	General-purpose digital I/O
25	P0.08	Digital I/O	General-purpose digital I/O
26	P0.09	Digital I/O	General-purpose digital I/O
	NFC1	NFC input	NFC antenna connection
27	P0.10	Digital I/O	General-purpose digital I/O
	NFC2	NFC input	NFC antenna connection
28	P0.11	Digital I/O	General-purpose digital I/O
29	GND	Ground	The pad must be connected to a solid ground plane
30	P0.12	Digital I/O	General-purpose digital I/O
31	P0.13	Digital I/O	General-purpose digital I/O
32	P0.14	Digital I/O	General-purpose digital I/O
33	P0.15	Digital I/O	General-purpose digital I/O
34	P0.16	Digital I/O	General-purpose digital I/O
35	P0.17	Digital I/O	General-purpose digital I/O
36	P0.18	Digital I/O	General-purpose digital I/O
37	P0.19	Digital I/O	General-purpose digital I/O
38	P0.20	Digital I/O	General-purpose digital I/O
39	P0.21	Digital I/O	General-purpose digital I/O
	RESET	Digital I/O	Configurable as pin reset

Pin NO.	Name	Pin function	Description
40	SWDIO	Digital I/O	System reset(active low).Also HW debug and flash Programming
41	SWDCLK	Digital input	HW debug and flash programming. Connect a 12K ohm resister to GND for flash programming .
42	P0.22	Digital I/O	General-purpose digital I/O
43	P0.23	Digital I/O	General-purpose digital I/O
44	P0.24	Digital I/O	General-purpose digital I/O
45	GND	Ground	The pad must be connected to a solid ground plane
46	GND	Ground	The pad must be connected to a solid ground plane

1. Digital I/O pad with 5mA source/sink capability.

Table 1 : Pin function

3.3 PCB Layout Guide

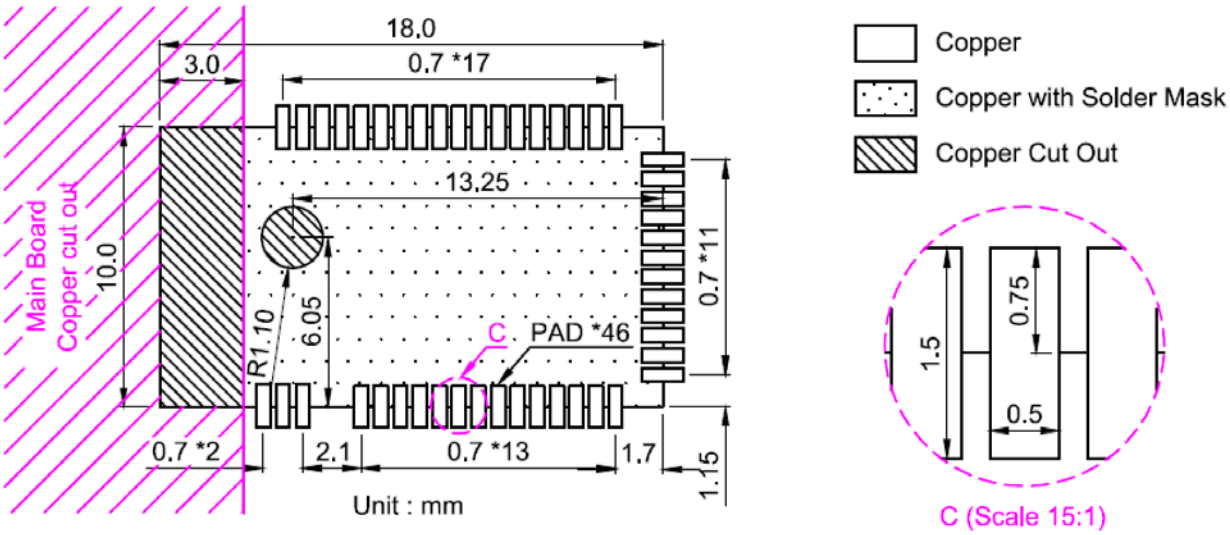

Figure 4 : PCB Layout Guide

4. Main Chip Solution

RF IC	Crystal Frequency
Nordic nRF52832-QFAA	32MHz

Table 2 : Main Chip Solution

5. Shipment Packing Information

Part Number	Package
ISBLE1810-P52832ACA	500 PCS/BOX

Table 3 : Shipment Packing Information

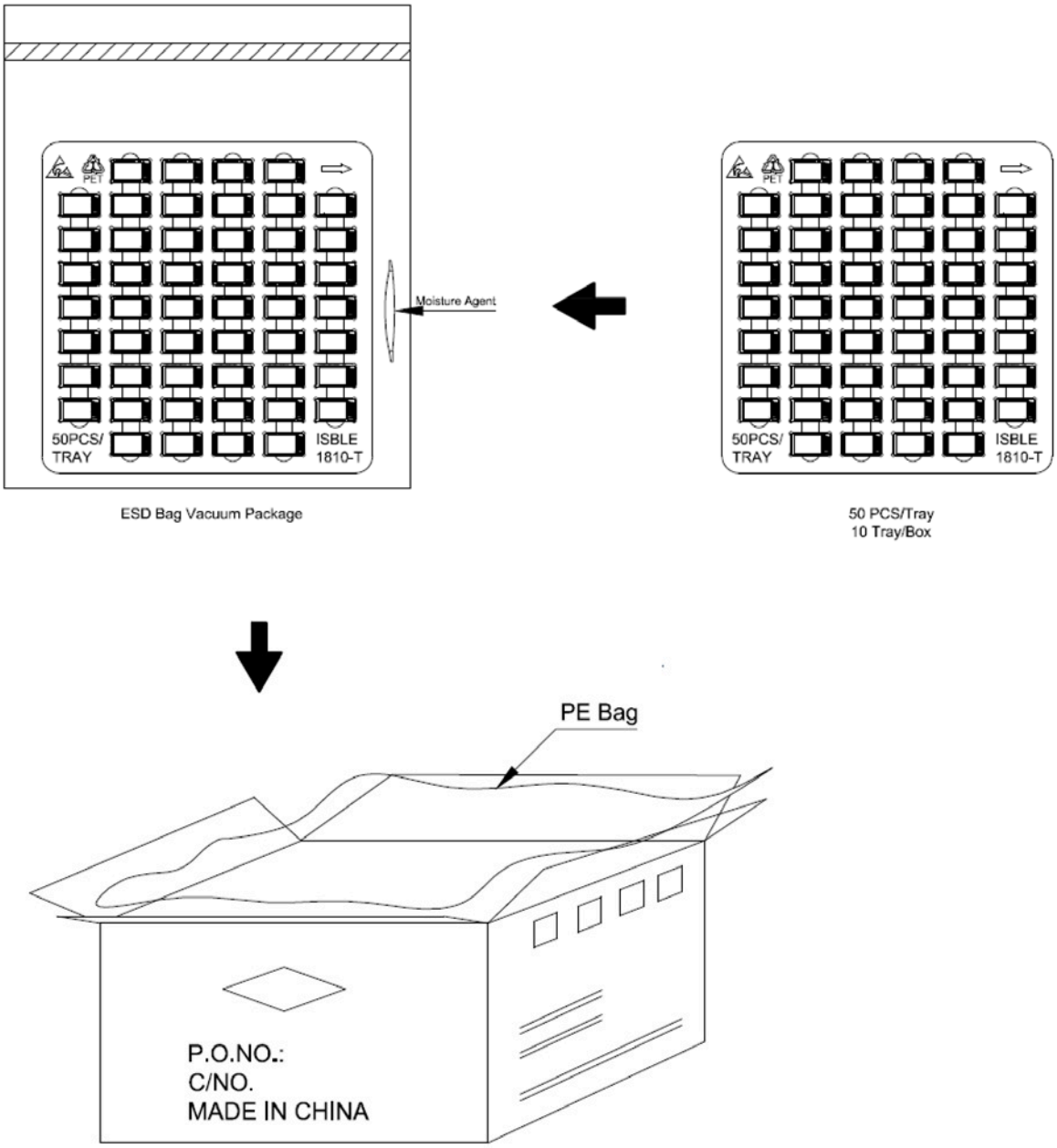

Figure 5 : Packing Information

6. Specification

6.1 Absolute Maximum Ratings

Maximum ratings are the extreme limits to which the chip can be exposed for a limited amount of time without permanently damaging it. Exposure to absolute maximum ratings for prolonged periods of time may affect the reliability of the device.

Symbol	Parameter	Min.	Max.	Units
Supply voltages				
VDD		-0.3	+3.9	V
VSS			0	V
I/O pin voltage				
V_{IO} , VDD ≤ 3.6 V		-0.3	VDD+0.3	V
V_{IO} , VDD > 3.6 V		-0.3	3.9	
NFC antenna pin current				
$INFC_{1/2}$			80	mA
Radio				
RF input level			10	dBm
Environmental WLCSP package				
Storage temperature		-40	+125	˚C
MSL	Moisture Sensitivity Level		2	
ESD HBM	Human Body Model		4	kV
ESD CDM_{QF}	Charged Device Model (QFN48, 6x6 mm package)		750	V
Flash memory				
Endurance		10000		Write / erase cycles
Retention		10 years at 40 °C		

Table 4 : Absolute maximum ratings

6.2 Operation Conditions

The operating conditions are the physical parameters that the chip can operate within.

Symbol	Parameter	Notes	Min.	Typ.	Max.	Units
VDD	Supply voltage, independent of DCDC enable		1.7	3.0	3.6	V
t_{R_VDD}	Supply rise time (0 V to 1.7 V)				60	ms
T_A	Operating temperature		-40	25	85	˚C

Table 5 : Operating conditions

6.3 Electrical Specifications

6.3.1 Radio Transceiver

- **General radio characteristics**

Symbol	Description	Min.	Typ.	Max.	Units
f_{OP}	Operating frequencies	2360		2500	MHz
$f_{PLL,PROG,RES}$	PLL programming resolution		2		kHz
$f_{PLL,CH,SP}$	PLL channel spacing		1		MHz
$f_{DELTA,1M}$	Frequency deviation @ 1 Msps		±170		kHz
$f_{DELTA,BLE,1M}$	Frequency deviation @ BLE 1Msps		±250		kHz
$f_{DELTA,2M}$	Frequency deviation @ 2 Msps		±320		kHz
fsk_{SPS}	On-the-air data rate	1		2	Msps

Table 6 : General radio characteristics

- **Radio current consumption**

Symbol	Description	Min.	Typ.	Max.	Units
$I_{TX,PLUS4dBM,DCDC}$	TX only run current (DCDC, 3V) PRF =+4 dBm		7.5		mA
$I_{TX,PLUS4dBM}$	TX only run current PRF = +4 dBm		16.6		mA
$I_{TX,0dBM,DCDC}$	TX only run current (DCDC, 3V)PRF = 0dBm		5.3		mA
$I_{TX,0dBM}$	TX only run current PRF = 0dBm		11.6		mA
$I_{TX,MINUS4dBM,DCDC}$	TX only run current DCDC, 3V PRF = -4dBm		4.2		mA
$I_{TX,MINUS4dBM}$	TX only run current PRF = -4 dBm		9.3		mA
$I_{TX,MINUS8dBM,DCDC}$	TX only run current DCDC, 3V PRF = -8 dBm		3.8		mA
$I_{TX,MINUS8dBM}$	TX only run current PRF = -8 dBm		8.4		mA
$I_{TX,MINUS12dBM,DCDC}$	TX only run current DCDC, 3V PRF = -12 dBm		3.5		mA
$I_{TX,MINUS12dBM}$	TX only run current PRF = -12 dBm		7.7		mA
$I_{TX,MINUS16dBM,DCDC}$	TX only run current DCDC, 3V PRF = -16 dBm		3.3		mA
$I_{TX,MINUS16dBM}$	TX only run current PRF = -16 dBm		7.3		mA
$I_{TX,MINUS20dBM,DCDC}$	TX only run current DCDC, 3V PRF = -20 dBm		3.2		mA
$I_{TX,MINUS20dBM}$	TX only run current PRF = -20 dBm		7.0		mA
$I_{TX,MINUS40dBM,DCDC}$	TX only run current DCDC, 3V PRF = -40 dBm		2.7		mA
$I_{TX,MINUS40dBM}$	TX only run current P_{RF} = -40 dBm		5.9		mA
$I_{START,TX,DCDC}$	TX start-up current DCDC, 3V, P_{RF} = 4 dBm		4.0		mA
$I_{START,TX}$	TX start-up current, P_{RF} = 4 dBm		8.8		mA

Table 7 : Radio current consumption

6.3.2 Transmitter Specifications

Symbol	Description	Min.	Typ.	Max.	Units
P_{RF}	Maximum output power.		4	6	dBm
P_{RFC}	RF power control range.		24		dB
P_{RFCR}	RF power accuracy.			±4	dB
$P_{RF1,1}$	1st Adjacent Channel Transmit Power 1 MHz (1 Msps)		-25		dBc
$P_{RF2,1}$	2nd Adjacent Channel Transmit Power 2 MHz (1 Msps)		-50		dBc
$P_{RF1,2}$	1st Adjacent Channel Transmit Power 2 MHz (2 Msps)		-25		dBc
$P_{RF2,2}$	2nd Adjacent Channel Transmit Power 4 MHz (2 Msps)		-50		dBc

Table 8 : Transmitter specifications

6.3.3 Receiver Operation

Symbol	Description	Min.	Typ.	Max.	Units
$P_{RX,MAX}$	Maximum received signal strength at < 0.1% PER		0		dBm
$P_{SENS,IT,1M}$	Sensitivity, 1Msps nRF mode [1]		-93		dBm
$P_{SENS,IT,SP,1M,BLE}$	Sensitivity, 1Msps BLE ideal transmitter, <=37 bytes BER=1E-3 [2]		-96		dBm
$P_{SENS,IT,LP,1M,BLE}$	Sensitivity, 1Msps BLE ideal transmitter >=128 bytes BER=1E-4 [3]		-95		dBm
$P_{SENS,IT,2M}$	Sensitivity, 2Msps nRF mode [4]		-89		dBm

1. Typical sensitivity applies when ADDR0 is used for receiver address correlation. When ADDR[1...7] are used for receiver address correlation, the typical sensitivity for this mode is degraded by 3dB.
2. As defined in the Bluetooth Core Specification v4.0 Volume 6: Core System Package (Low Energy Controller Volume)
3. Equivalent BER limit < 10E-04
4. Typical sensitivity applies when ADDR0 is used for receiver address correlation. When ADDR[1...7] are used for receiver address correlation, the typical sensitivity for this mode is degraded by 3dB.

Table 9 : Receiver operation

6.3.4 RX Intermodulation

Symbol	Description	Min.	Typ.	Max.	Units
$P_{IMD,1M}$	IMD performance, 1 Msps, 3rd, 4th, and 5th offset channel		-33		dBm
$P_{IMD,1M,BLE}$	IMD performance, BLE 1 Msps, 3rd, 4th, and 5th offset channel		-30		dBm
$P_{IMD,2M}$	IMD performance, 2 Msps, 3rd, 4th, and 5th offset channel		-33		dBm

Table 10 : RX intermodulation

6.3.5 RX Selectivity

Symbol	Description	Min.	Typ.	Max.	Units
$C/I_{1M,co\text{-}channel}$	1Msps mode, Co-Channel interference		9		dB
$C/I_{1M,-1MHz}$	1 Msps mode, Adjacent (-1 MHz) interference		-2		dB
$C/I_{1M,+1MHz}$	1 Msps mode, Adjacent (+1 MHz) interference		-10		dB
$C/I_{1M,-2MHz}$	1 Msps mode, Adjacent (-2 MHz) interference		-19		dB
$C/I_{1M,+2MHz}$	1 Msps mode, Adjacent (+2 MHz) interference		-42		dB
$C/I_{1M,-3MHz}$	1 Msps mode, Adjacent (-3 MHz) interference		-38		dB
$C/I_{1M,+3MHz}$	1 Msps mode, Adjacent (+3 MHz) interference		-48		dB
$C/I_{1M,\pm6MHz}$	1 Msps mode, Adjacent (≥6 MHz) interference		-50		dB
$C/I_{1MBLE,co\text{-}channel}$	1 Msps BLE mode, Co-Channel interference		6		dB
$C/I_{1MBLE,-1MHz}$	1 Msps BLE mode, Adjacent (-1 MHz) interference		-2		dB
$C/I_{1MBLE,+1MHz}$	1 Msps BLE mode, Adjacent (+1 MHz) interference		-9		dB
$C/I_{1MBLE,-2MHz}$	1 Msps BLE mode, Adjacent (-2 MHz) interference		-22		dB
$C/I_{1MBLE,+2MHz}$	1 Msps BLE mode, Adjacent (+2 MHz) interference		-46		dB
$C/I_{1MBLE,>3MHz}$	1 Msps BLE mode, Adjacent (≥3 MHz) interference		-50		dB
$C/I_{1MBLE,image}$	Image frequency Interference		-22		dB
$C/I_{1MBLE,image,1MHz}$	Adjacent (1 MHz) interference to in-band image frequency		-35		dB
$C/I_{2M,co\text{-}channel}$	2Msps mode, Co-Channel interference		10		dB
$C/I_{2M,-2MHz}$	2 Msps mode, Adjacent (-2 MHz) interference		6		dB
$C/I_{2M,+2MHz}$	2 Msps mode, Adjacent (+2 MHz) interference		-14		dB
$C/I_{2M,-4MHz}$	2 Msps mode, Adjacent (-4 MHz) interference		-20		dB
$C/I_{2M,+4MHz}$	2 Msps mode, Adjacent (+4 MHz) interference		-44		dB
$C/I_{2M,-6MHz}$	2 Msps mode, Adjacent (-6 MHz) interference		-42		dB
$C/I_{2M,+6MHz}$	2 Msps mode, Adjacent (+6 MHz) interference		-47		dB
$C/I_{2M,\geq12MHz}$	2 Msps mode, Adjacent (≥12 MHz) interference		-52		dB

Table 11 : RX selectivity

6.3.6 Radio Timing

Symbol	Description	Min.	Typ.	Max.	Units
t_{TXEN}	Time between TXEN task and READY event after channel FREQUENCY configured		140		us
$t_{TXEN,FAST}$	Time between TXEN task and READY event after channel FREQUENCY configured (Fast Mode)		40		us
$t_{TXDISABLE}$	Time between DISABLE task and DISABLED event when the radio was in TX and mode is set to 1Msps		6		us
$t_{TXDISABLE,2M}$	Time between DISABLE task and DISABLED event when the radio was in TX and mode is set to 2Msps		4		us
t_{RXEN}	Time between the RXEN task and READY event after channel FREQUENCY configured in default mode		140		us
$t_{RXEN,FAST}$	Time between the RXEN task and READY event after channel FREQUENCY configured in fast mode		40		us
t_{SWITCH}	The minimum time taken to switch from RX to TX or TX to RX (channel FREQUENCY unchanged)		20		us
$t_{RXDISABLE}$	Time between DISABLE task and DISABLED event when the radio was in RX		0		us
$t_{TXCHAIN}$	TX chain delay		0.6		us
$t_{RXCHAIN}$	RX chain delay		9.4		us
$t_{RXCHAIN,2M}$	RX chain delay in 2Msps mode		5		us

Table 12 : Radio timing

6.3.7 RSSI Specifications

Symbol	Description	Min.	Typ.	Max.	Units
$RSSI_{ACC}$	RSSI Accuracy Valid range -90 to -20 dBm		±2		dB
$RSSI_{RESOLUTION}$	RSSI resolution		1		dB
$RSSI_{PERIOD}$	Sample period		8		us

Table 13 : RSSI specifications

6.3.8 CPU Performance

The CPU clock speed is 64 MHz. Current and efficiency data is taken when in System ON and the CPU is executing the CoreMark™ benchmark. It includes power regulator and clock base currents. All other blocks are IDLE.

Symbol	Description	Min.	Typ.	Max.	Units
W_{FLASH}	CPU wait states, running from flash, cache disabled	0		2	
$W_{FLASHCACHE}$	CPU wait states, running from flash, cache enabled	0		3	
W_{RAM}	CPU wait states, running from RAM			0	
$I_{DDFLASHCACHE}$	CPU current, running from flash, cache enabled, LDO		7.4		mA
$I_{DDFLASHCACHEDCDC}$	CPU current, running from flash, cache enabled, DCDC 3V		3.7		mA
$I_{DDFLASH}$	CPU current, running from flash, cache disabled, LDO		8.0		mA
$I_{DDFLASHDCDC}$	CPU current, running from flash, cache disabled, DCDC 3V		3.9		mA
I_{DDRAM}	CPU current, running from RAM, LDO		6.7		mA
$I_{DDRAMDCDC}$	CPU current, running from RAM, DCDC 3V		3.3		mA
$I_{DDFLASH}$	CPU efficiency, running from flash, cache enabled, LDO		125		µA/ MHz
$I_{DDFLASHDCDC/MHz}$	CPU efficiency, running from flash, cache enabled, DCDC 3V		58		µA/ MHz
CM_{FLASH}	CoreMark[3], running from flash, cache enabled		215		CoreMark
$CM_{FLASH/MHz}$	CoreMark per MHz, running from flash, cache enabled		3.36		CoreMark MHz
$CM_{FLASH/mA}$	CoreMark per mA, running from flash, cache enabled, DCDC 3V		58		CoreMark mA

Table 14 : CPU performance

6.3.9 Current Consumption, Sleep

Symbol	Description	Min.	Typ.	Max.	Units
I_{OFF}	System OFF current, no RAM retention		0.7		µA
I_{ON}	System ON base current, no RAM retention		1.2		µA
I_{RAM}	Additional RAM retention current per 4 KB RAM section		20		nA

Table 15 : Current consumption, sleep

7. Reference Circuit

7.1 Schematic with Internal LDO

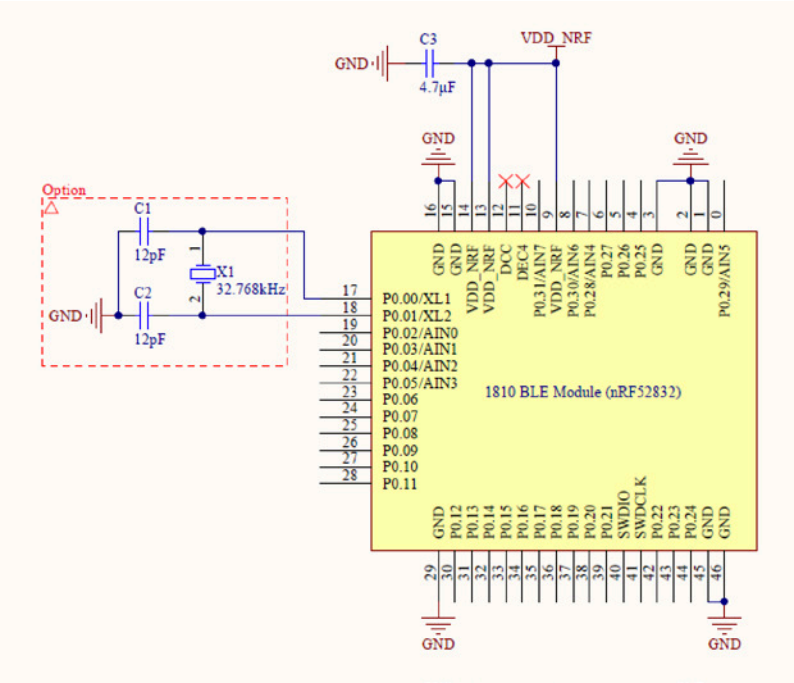

Figure 6 : Schematic with internal LDO

7.2 Schematic with Internal DC/DC Converter

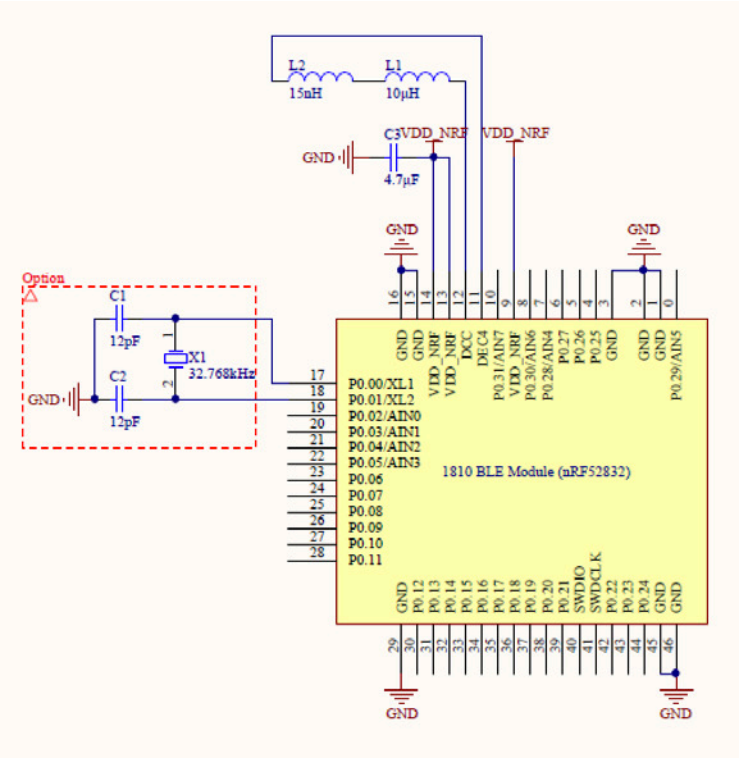

Figure 7 : Schematic with internal DC/DC converter

8. Development Kit

The ISBLE1810-EV is a versatile single board development kit for iSenseTek 1810 BLE module series. The kit gives access to all module I/O and interfaces via connectors and has 4 LEDs and 4 buttons which are user-programmable. Using the ISBLE1810-EV it enables setting up of a peer device that you can use to test the connection of your application, it provides a complete solution, allowing faster time to market.

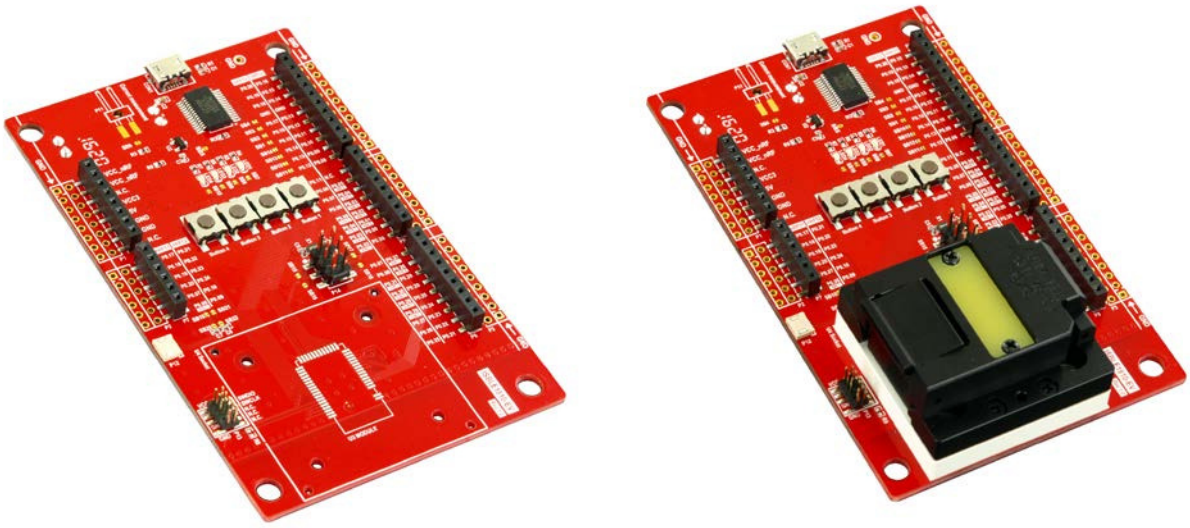

Figure 8 : Development Kit for ISBLE1810

FEATURES
Support USB to UART for DTM use
All GPIO and interfaces available at edge connectors
Button *4 and LED *4
CR2032 battery holder *1
Molex NFC connector (051281-0594) *1
Support module test & program socket

9. Antenna Forbidden Zone Description

The PCB and mechanism design need to meet antenna forbidden zone description Table. Otherwise affect the efficiency of the antenna.

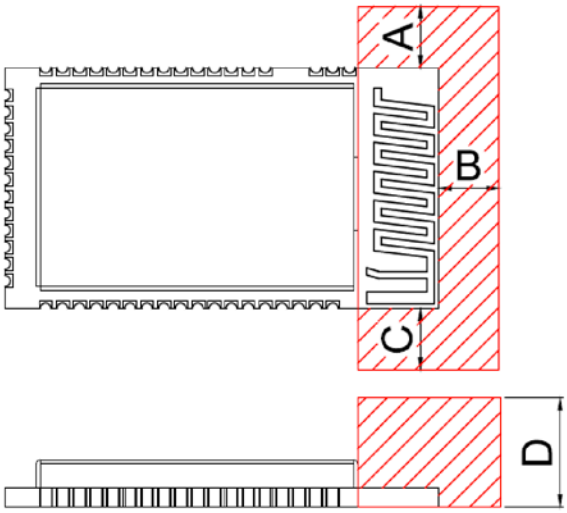

Figure 9 : Antenna Forbidden Zone Description

Material \ Dimension (mm)	A	B	C	D
FR4 (without Copper)	≧ 1	≧ 3	≧ 1	≧ 3
FR4 (with Copper)	≧ 4	≧ 7	≧ 10	≧ 4
Metal	≧ 4	≧ 3.5	≧ 10	≧ 3
Plastic	≧ 1	≧ 1	≧ 1	≧ 3

Table 16 : Antenna Forbidden Zone List

10. RF Exposure Warning Statement

This equipment complies with FCC RF radiation exposure limits set forth for an uncontrolled environment. This transmitter must not be co-located or operating in conjunction with any other antenna or transmitter.

This equipment complies with Part 15 of the FCC Rules. Operation is subject the following two conditions:

(1) This device may not cause harmful interference.
(2) This device must accept any interference received, including interference that may cause undesired operation.

The devices must be installed and used in strict accordance with the manufacturer's instructions as described in this document.

This equipment has been tested and found to comply with the limits for a Class B digital device, pursuant to part 15 of the FCC rules. These limits are designed to provide reasonable protection against harmful interference in a residential installation. This equipment generates, uses and can radiate radio frequency energy and, if not installed and used in accordance with the instructions, may cause harmful interference to radio communications. However, there is no guarantee that interference will not occur in a particular installation. If this equipment does cause harmful interference to radio or television reception, which can be determined by turning the equipment off and on, the user is encouraged to try to correct the interference by one or more of the following measures:

-Reorient or relocate the receiving antenna.
-Increase the separation between the equipment and receiver.
-Connect the equipment into an outlet on a circuit different from that to which the receiver is connected.
-Consult the dealer or an experienced radio/TV technician for help.

The final end product must be labeled in a visible area with the following: "Contains FCC ID: 2AI2V-ISBLE1810X52".

This module has been granted modular approval for mobile applications. OEM integrators for host products may use the module in their final products without additional FCC certification if they meet the following conditions. Otherwise, additional FCC approvals must

be obtained.

- The host product with the module installed must be evaluated for simultaneous transmission requirements.

- The users manual for the host product must clearly indicate the operating requirements and conditions that must be observed to ensure compliance with current FCC RF exposure guidelines.

- To comply with FCC regulations limiting both maximum RF output power and human exposure to RF radiation, the maximum antenna gain including cable loss in a mobile-only exposure condition must not exceed {Insert Reference to Your Antenna Information Here}.

11. Document History

Revision	Date	Description/Changes
1.0	2016/05/16	New Approval Sheet
2.1	2016/07/22	1. Modify Part No. to ISBLE1810-x52. P1 2. Update P/N Number Define. P5 3. ISBLE1810-P52xxxxxA add shielding marking and test point for PCB Bottom layer. P5 4. Update PCB layout guide information. P8 5. Update development kit information & Photos. P18
2.2	2016/11/17	1. Modify Product Dimensions. P5 2. Modify Pin Description. P6 3. Modify PCB Layout Guide. P8 4. Modufy Reference Circuit. P16
2.3	2017/01/04	Add RF Exposure Warning Statement. P19
2.4	2017/02/09	Modify RF Exposure Warning Statement Content. P19~20