OAW-AP1571
Antenna Test Report

Version:V1
2025-6-13

Table of Contents

1. Test Information 2
2. Testing Location 2
3. Test Frequency 2
4. Antenna Information 2
5. Test Configuration 3
6. Reference Test 5
7. Test Method 5
8. Measured Values and Calculation of Correlated / Uncorrelated Gains 6
9. Radiation Pattern 11

1. Test Information

Equipment	EMT Chamber
Applicant	Han-Networks
Manufacturer	AOT

2. Testing Location

Testing Location	
AOT	ADD: 289 Jinghua Road,Shipai, BachengTown, Kunshan City, Jiangsu Province

Test Condition	Test Engineer	Test Environment (°C / %)	Test Date
Radiated	Changgang Lai	20-24 / 45-60	20250604

3. Test Frequency

Band (MHz)	Test Frequency (MHz)
2400-2500	2450
5150-5850	5200/5300/5500/5800
5925-7125	6000/6800

4. Antenna Information

	Freq.	Type	Size(L*W*H)	Cable length (mm)	Polarization Type
A1	2G4	Dipole	23*13.48*11.9	80	Vertical
A2	2G4	Dipole	23*13.48*11.9	170	Vertical
A3	5GH/6G	Monopole	17.1*4*8.8	200	Vertical
A4	5GH/6G	Dipole	27*27*0.8	115	Horizontal
A5	5G	Dipole	32.4*32.4*0.8	70	Horizontal
A6	5G	Monopole	17.1*4*8.8	60	Vertical
A7	BLE	Dipole	23*13.4*11.9	80	Vertical
A8	Scanning	Dipole	33*16*9.8	220	Vertical
A9	GNSS	PIFA	35.5*20.9*8.5	150	Vertical

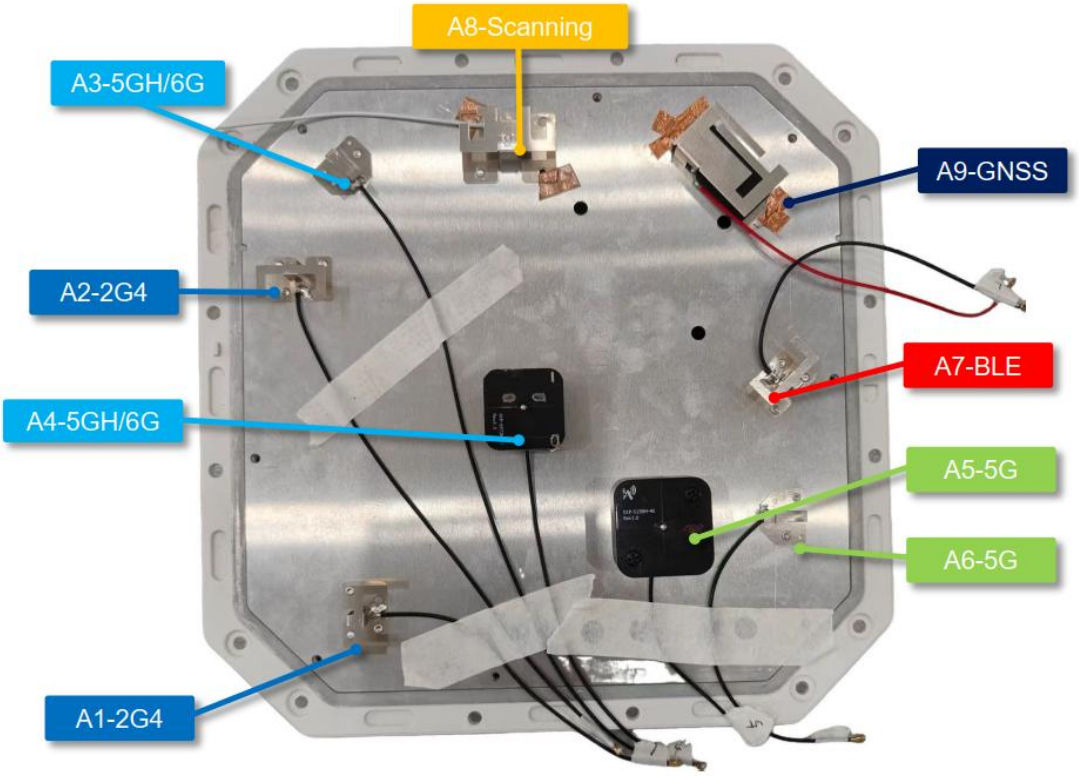

5. Test Configuration

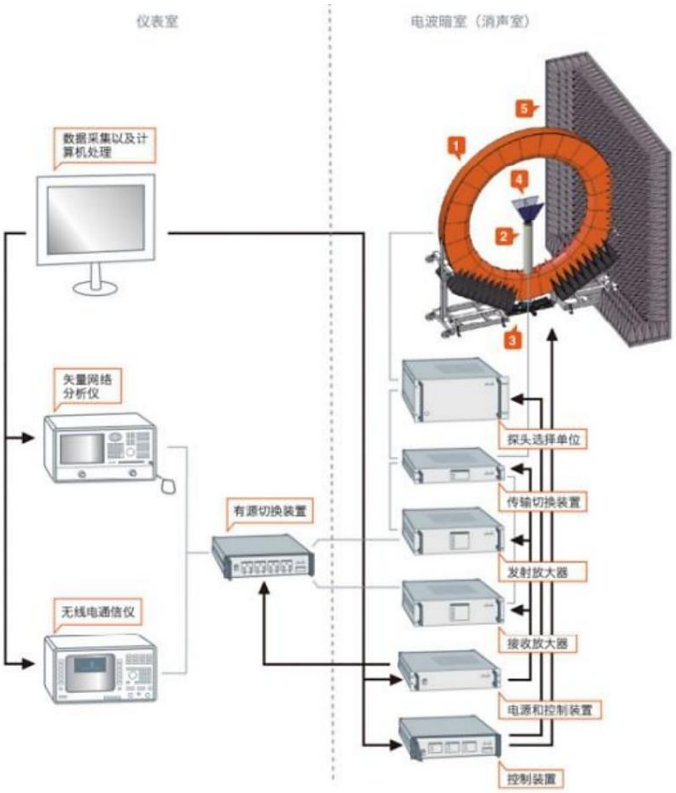

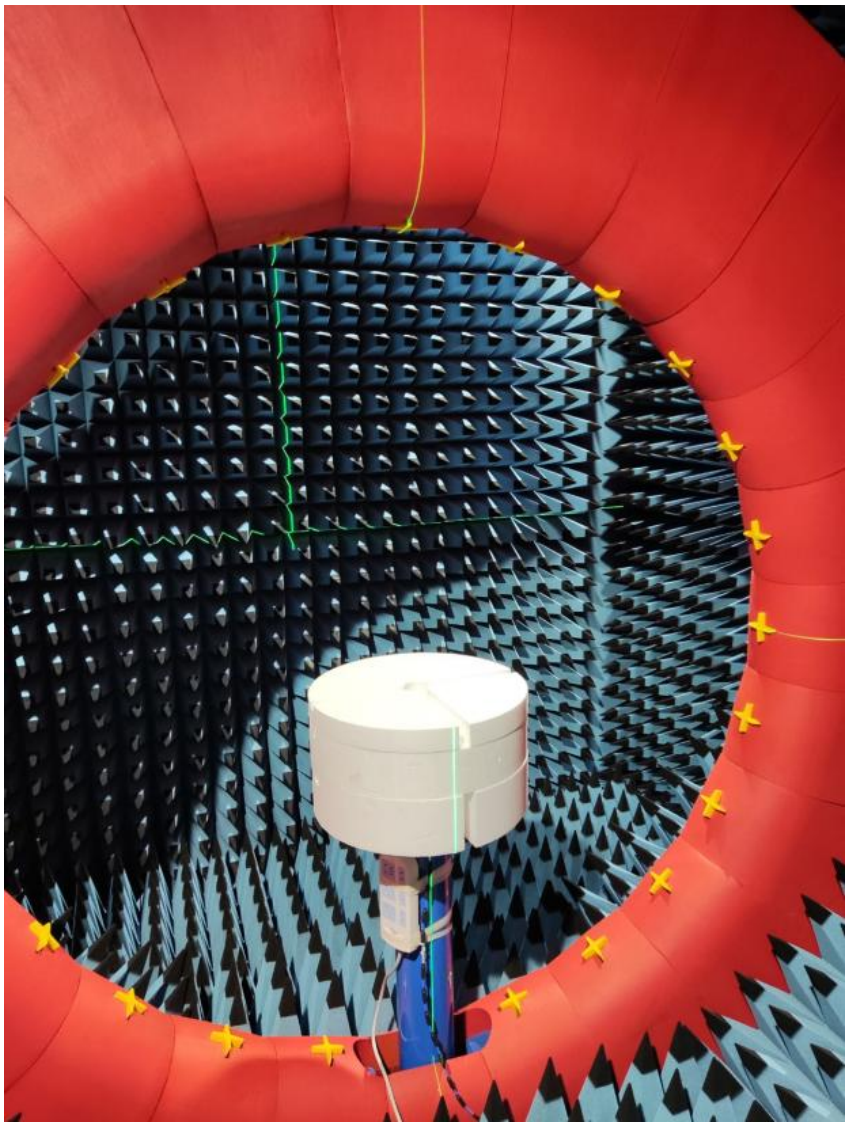

Microwave anechoic chamber

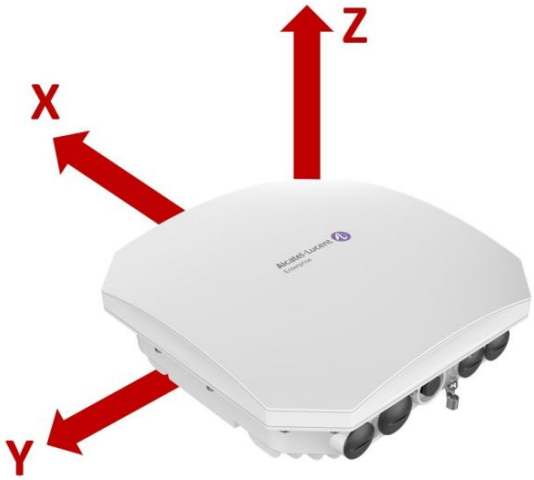

6. Reference Test

Measurement Instrument

7. Test Method

The “great circle” cut method, whereby the Measurement Antenna remains fixed and the EUT is rotated about two axes in sequential order. The radiated RF performance of the Equipment Under Test (EUT) is measured by sampling the radiated transmit power of the mobile at various locations surrounding the device. A three-dimensional characterization of the 'transmit' performance of the EUT is pieced together by analyzing the

data from the spatially distributed measurements.

Data points taken every 2 degrees in the theta and in the phi axes are deemed sufficient to fully characterize the EUT's Far-Field radiation pattern and total radiated power All of the measured power values will be integrated.

8. Measured Values and Calculation of Correlated / Uncorrelated Gains

Summary of Antenna Peak Gain

Antenna Peak Gain Table (Ant. Position：2.4G Ant.1~2)

Band (MHz)	2400-2500
Ant.1 Max Gain (dBi)	5.75
Ant.2 Max Gain (dBi)	5.02

Antenna Peak Gain Table (Ant. Position：5G Ant.5~6)

Band (MHz)	5150 ~ 5250	5250 ~ 5350	5470 ~ 5725	5725 ~ 5850
Ant.5 Max Gain (dBi)	3.38	3.51	3.82	4.89
Ant.6 Max Gain (dBi)	7.99	7.65	5.97	5.44

Antenna Peak Gain Table (Ant. Position：5GH/6G Ant.3~4)

Band (MHz)	5470 ~ 5725	5725 ~ 5850	5925 ~ 6425	6525 ~ 6875
Ant.3 Max Gain (dBi)	5.82	5.87	5.44	5.46
Ant.4 Max Gain (dBi)	4.05	4.98	6.19	5.96

Antenna Peak Gain Table (Ant. Position：BLE/Zigbee Ant.7)

Band (MHz)	2400-2500
Ant.7 Max Gain (dBi)	6.19

Antenna Peak Gain Table (Ant. Position：Scanning Ant.8)

Band (MHz)	2400-2500			
Ant.8 Max Gain (dBi)	5.85			
Band (MHz)	5150 ~ 5250	5250 ~ 5350	5470 ~ 5725	5725 ~ 5850
Ant.8 Max Gain (dBi)	5.52	5.5	5.52	6.09
Band (MHz)	5925 ~ 6425	6525 ~ 6875		
Ant.8 Max Gain (dBi)	5.66	6.68		

Antenna Peak Gain Table (Ant. Position：GNSS Ant.9)

Band (MHz)	1176	1575
Ant.9 Max Gain (dBi)	-1.52	1.71

Peak Realized Gain of Antennas in angle 30° relative to horizontal

	Gain(dBi)		
Frequency MHz	5150 ~ 5250	5925 ~ 6425	6525 ~ 6875
Ant.3	/	-2.5	-2.2

Ant.4	/	0.0	-3.9
Ant.5	-4.7	/	/
Ant.6	-2.0	/	

Result for Uncorrelated Gain and Correlated Gain

Maximum Correlated Gain Calculation

Because the antennas are fixed in location within the device the directional antenna gain for MIMO is calculated over a sphere using the raw spatial data taken at 10 degree steps of theta and 10 degree of theta phi for each antenna using the equations from KDB 662911 D01. The raw antenna data is located in the appendix of this report.

The correlated antenna gain was calculated using KDB 662911 D01 F(2)(d)(i).

$$\text{Directional gain} = 10\log[(10^{G_1/20} + 10^{G_2/20} + \ldots + 10^{G_N/20})^2 / N_{ANT}]\ \text{dBi}$$

The uncorrelated antenna gain was calculated using KDB 662911 D01 F(2)(d)(ii)

$$\text{Directional gain} = 10\log[(10^{G_1/10} + 10^{G_2/10} + \ldots + 10^{G_N/10})/N_{ANT}]\ \text{dBi}$$

The correlated gains were calculated for each point in the spatial data and the highest values reported.

Correlated Directional Gain for 2.4GHz (Ant. Position：2.4G Ant.1~2)

Frequency (MHz)	2450
Directional Gain	7.69

Ant.1~2 @2.45GHz

f=2450MHz E_total Phi(deg) \ Theta(deg)	-180.00	-170.00	-160.00	-150.00	-140.00	-130.00	-120.00	-110.00	-100.00	-90.00	-80.00	-70.00	-60.00	-50.00	-40.00	-30.00	-20.00	-10.00	0.00	10.00	20.00	30.00	40.00	50.00	60.00	70.00	80.00	90.00	100.00	110.00	120.00	130.00	140.00	150.00	160.00	170.00	180.00
0	-180.00	-170.00	-160.00	-150.00	-140.00	-130.00	-120.00	-110.00	-100.00	-90.00	-80.00	-70.00	-60.00	-50.00	-40.00	-30.00	-20.00	-10.00	0.00	10.00	20.00	30.00	40.00	50.00	60.00	70.00	80.00	90.00	100.00	110.00	120.00	130.00	140.00	150.00	160.00	170.00	180.00
0	-3.60	-3.13	0.57	0.57	-0.40	-0.44	-0.44	0.61	0.37	0.43	1.39	2.44	3.27	3.74	3.14	1.97	1.96	1.72	-1.32	-4.83	-1.95	0.11	3.52	6.19	6.53	5.80	4.35	2.17	-0.06	-0.69	-1.09	-2.22	-4.32	-3.00	-7.07	-8.02	-3.60
10	-3.60	-3.46	0.61	0.42	-1.41	-1.27	-0.27	0.33	-0.52	-0.58	0.66	1.89	2.81	3.45	2.96	1.92	2.07	1.76	-1.32	-5.76	-2.79	-1.01	3.78	6.96	7.47	6.87	5.25	2.32	-0.49	0.56	1.08	0.67	-2.78	-3.83	-6.42	-7.61	-3.60
20	-3.60	-3.99	-0.20	-0.69	-2.13	-2.21	-1.22	-0.51	-1.34	-1.63	-0.40	0.98	2.07	2.77	2.01	1.59	2.16	1.81	-1.32	-6.51	-2.73	-1.77	2.97	6.39	6.67	5.93	4.47	1.51	-2.75	-1.76	1.32	1.03	-2.13	-2.98	-4.54	-6.78	-3.60
30	-3.60	-4.59	-1.74	-2.67	-1.89	-1.18	-1.06	-0.51	-0.15	0.42	1.28	2.14	2.61	2.00	1.45	1.39	2.16	1.83	-1.32	-6.86	-1.90	-0.80	2.24	5.44	5.78	5.13	3.90	1.42	-2.41	-3.61	-1.86	-1.27	-2.52	-1.25	-2.27	-5.69	-3.60
40	-3.60	-5.19	-3.41	-4.29	-1.46	-0.28	-0.35	1.01	1.74	2.19	2.55	3.20	3.73	4.11	3.10	2.11	2.13	1.79	-1.32	-6.78	-1.16	1.01	3.43	5.75	5.76	4.80	3.43	1.61	-0.96	-3.47	-3.19	-3.10	-3.54	-0.59	-1.09	-4.96	-3.60
50	-3.60	-5.81	-4.13	-3.86	-2.13	-0.42	0.49	2.07	2.64	2.80	3.12	4.19	5.06	5.64	4.85	3.37	2.18	1.66	-1.32	-6.35	-0.93	2.00	4.20	5.94	5.87	5.02	3.69	1.78	-0.68	-3.59	-3.03	-2.30	-3.63	-1.08	-1.42	-4.95	-3.60
60	-3.60	-6.61	-4.05	-2.12	-1.20	-0.45	0.29	1.76	2.57	3.16	3.90	5.05	6.05	6.83	6.04	4.16	2.24	1.42	-1.32	-5.63	-1.32	1.77	3.73	4.81	4.63	4.22	3.35	1.42	-0.77	-2.98	-1.78	-1.67	-2.53	-1.86	-2.87	-5.64	-3.60
70	-3.60	-7.66	-4.18	-1.87	-0.73	0.24	0.60	0.83	1.46	2.68	4.07	5.40	6.40	7.08	6.34	4.25	2.11	1.08	-1.32	-4.64	-2.19	0.34	1.95	2.70	2.59	2.81	2.33	0.29	-2.22	-2.96	-1.10	-1.49	-3.05	-2.21	-4.04	-5.74	-3.60
80	-3.60	-9.08	-4.92	-3.03	-2.20	-0.34	0.29	0.22	0.30	1.63	3.57	4.97	5.89	6.52	5.82	3.78	1.67	0.66	-1.32	-3.45	-2.62	-1.68	0.30	1.86	2.47	2.82	2.33	0.50	-1.69	-1.62	-0.85	-1.13	-3.33	-2.83	-3.76	-7.59	-3.60
90	-3.60	-10.70	-5.91	-3.93	-3.92	-1.52	-0.24	0.03	-0.19	1.02	3.13	4.49	5.33	5.74	5.10	3.02	0.92	0.20	-1.32	-2.21	-1.25	-1.09	0.62	2.04	3.57	3.56	2.68	0.94	-1.36	-1.75	-1.15	-1.41	-3.73	-2.81	-2.72	-6.62	-3.60
100	-3.60	-11.92	-6.54	-3.87	-3.09	-2.87	-1.35	-0.49	-0.23	0.74	2.61	4.44	5.47	5.62	4.81	2.42	0.00	-0.28	-1.32	-1.06	0.77	1.59	2.25	3.52	3.83	3.75	2.82	0.96	-1.34	-1.94	-1.53	-2.38	-5.22	-1.76	-1.53	-4.89	-3.60
110	-3.60	-11.99	-6.89	-4.00	-2.48	-1.51	-0.69	0.12	0.70	1.30	2.65	4.58	5.79	5.78	4.63	2.11	-0.68	-0.73	-1.32	-0.10	2.36	3.66	3.89	4.06	3.76	3.49	2.69	1.21	-0.68	-1.77	-2.50	-3.63	-4.92	-0.70	-0.51	-3.49	-3.60
120	-3.60	-10.83	-7.46	-6.06	-2.67	-1.94	-1.54	-0.70	0.11	0.60	1.83	4.02	5.63	5.49	4.21	1.86	-0.63	-1.15	-1.32	0.64	3.27	4.90	5.02	4.90	4.27	3.73	2.48	0.91	-0.33	-0.72	-1.60	-1.54	-2.17	-0.22	-0.06	-2.59	-3.60
130	-3.60	-9.24	-6.00	-6.99	-4.26	-4.70	-3.50	-1.29	0.01	0.90	2.09	4.60	6.19	6.20	4.36	1.91	0.00	-1.54	-1.32	1.14	3.52	5.28	5.49	5.45	4.83	4.25	3.17	1.57	0.25	0.18	-0.16	0.41	-0.24	-0.46	-0.38	-2.16	-3.60
140	-3.60	-8.10	-7.71	-7.40	-5.20	-3.75	-1.60	0.06	1.47	2.63	4.15	6.15	7.69	7.38	5.15	2.62	0.59	-1.96	-1.32	1.45	3.27	4.73	5.45	5.39	4.74	4.29	3.43	2.17	0.72	-0.11	-1.18	0.29	0.33	-1.60	-1.19	-2.10	-3.60
150	-3.60	-7.64	-6.96	-6.39	-6.17	-3.30	-1.05	0.10	2.03	3.86	5.51	6.89	7.69	7.53	5.54	2.96	0.67	-2.46	-1.32	1.62	2.75	3.43	4.73	5.28	4.58	3.74	2.75	1.57	0.27	-1.05	-2.36	0.25	0.26	-2.63	-1.74	-2.30	-3.60
160	-3.60	-7.75	-6.44	-4.33	-5.34	-1.01	-0.44	0.34	1.74	3.18	4.73	5.74	6.40	6.41	4.39	2.15	0.13	-3.11	-1.32	1.68	2.25	2.19	3.45	4.56	4.48	3.72	2.67	1.61	0.91	0.37	-0.48	0.61	0.28	-1.64	-1.25	-2.68	-3.60
170	-3.60	-8.04	-6.67	-2.84	-4.71	-2.11	-1.49	-1.29	-0.78	1.90	3.99	4.94	5.36	5.23	3.14	0.92	-0.84	-3.91	-1.32	1.70	1.98	1.86	3.09	3.78	3.27	2.46	1.40	0.42	0.37	0.34	-0.73	0.20	0.28	-0.22	-0.19	-2.87	-3.60

Uncorrelated Directional Gain for 2.4GHz (Ant. Position：2.4G Ant.1~2)

Frequency (MHz)	2450
Directional Gain	4.68

Ant.1~2 @2.45GHz

f=2450MHz E_total Phi(deg) \ Theta(deg)	-180	-170	-160	-150	-140	-130	-120	-110	-100	-90	-80	-70	-60	-50	-40	-30	-20	-10	0	10	20	30	40	50	60	70	80	90	100	110	120	130	140	150	160	170	180
0	-180	-170	-160	-150	-140	-130	-120	-110	-100	-90	-80	-70	-60	-50	-40	-30	-20	-10	0	10	20	30	40	50	60	70	80	90	100	110	120	130	140	150	160	170	180
0	-6.59	-5.94	-2.31	-2.23	-3.05	-3.30	-3.44	-2.40	-2.60	-2.52	-1.57	-0.52	0.33	0.82	0.20	-0.96	-1.04	-1.28	-4.32	-7.81	-4.94	-2.73	0.90	3.35	3.65	2.91	1.48	-0.61	-2.82	-3.69	-4.10	-5.10	-7.03	-5.74	-9.11	-10.99	-6.59
10	-6.59	-6.10	-2.20	-2.46	-4.20	-3.99	-3.14	-2.61	-3.43	-3.39	-2.11	-0.88	0.03	0.70	0.05	-0.88	-0.91	-1.24	-4.32	-8.76	-5.80	-3.55	1.32	4.18	4.53	3.67	2.25	-0.54	-3.11	-2.45	-1.12	-2.34	-5.62	-6.69	-9.33	-10.53	-6.59
20	-6.59	-6.43	-2.93	-3.67	-5.10	-4.97	-4.13	-3.52	-4.31	-4.62	-3.39	-1.96	-0.62	-0.05	-0.77	-1.21	-0.83	-1.20	-4.32	-9.51	-5.73	-4.26	0.42	3.49	3.67	2.92	1.46	-1.50	-5.76	-4.64	-1.65	-1.98	-5.06	-5.99	-7.50	-9.41	-6.59
30	-6.59	-7.01	-4.42	-5.65	-4.90	-4.09	-4.07	-3.35	-2.95	-2.39	-1.68	-0.87	-0.39	-0.27	-1.48	-1.59	-0.85	-1.17	-4.32	-9.87	-4.89	-3.60	-0.37	2.59	2.82	2.15	0.92	-1.58	-5.34	-6.57	-4.78	-4.17	-5.53	-4.23	-5.20	-9.29	-6.59
40	-6.59	-7.79	-6.11	-7.15	-4.46	-3.29	-3.20	-1.84	-1.18	-0.77	-0.44	0.20	0.72	1.11	0.09	-0.69	-0.86	-1.21	-4.32	-9.76	-4.15	-1.96	0.95	2.06	2.81	1.96	0.59	-1.29	-3.96	-6.03	-6.14	-6.11	-6.26	-3.38	-4.06	-7.71	-6.59
50	-6.59	-8.68	-6.96	-6.21	-4.97	-3.43	-2.46	-0.90	-0.36	-0.21	0.12	1.18	2.05	2.63	1.85	0.43	-0.76	-1.35	-4.32	-9.28	-3.94	-1.01	1.21	2.98	2.90	2.04	0.80	-1.09	-3.69	-5.96	-5.41	-4.71	-5.57	-3.82	-4.42	-7.85	-6.59
60	-6.59	-9.61	-6.97	-4.81	-4.17	-3.46	-2.72	-1.25	-0.44	0.15	0.89	2.04	3.06	3.84	3.08	1.25	-0.68	-1.59	-4.32	-8.52	-4.28	-1.21	0.72	1.86	1.69	1.28	0.44	-1.48	-3.78	-5.00	-4.72	-4.55	-5.19	-4.72	-5.88	-8.65	-6.59
70	-6.59	-10.64	-7.11	-4.73	-3.74	-2.71	-2.35	-2.14	-1.46	-0.21	1.13	2.45	3.46	4.12	3.38	1.30	-0.85	-1.93	-4.32	-7.54	-4.94	-2.51	-1.06	-0.20	-0.19	-0.03	-0.54	-2.66	-5.14	-4.83	-4.06	-4.45	-6.05	-5.18	-6.97	-9.63	-6.59
80	-6.59	-11.88	-7.79	-5.90	-5.21	-3.31	-2.61	-2.56	-2.35	-1.09	0.73	2.08	2.98	3.57	2.84	0.78	-1.34	-2.35	-4.32	-6.40	-5.18	-4.06	-2.66	-1.11	-0.41	-0.02	-0.52	-2.47	-4.66	-4.57	-3.86	-4.07	-6.27	-5.84	-6.57	-9.88	-6.59
90	-6.59	-13.38	-8.79	-6.88	-6.82	-4.37	-3.07	-2.56	-2.48	-1.32	0.57	1.81	2.51	2.81	2.11	0.02	-2.05	-2.79	-4.32	-5.20	-4.09	-3.55	-2.15	-0.16	0.58	0.68	-0.09	-1.90	-4.37	-4.75	-4.10	-4.41	-6.24	-5.81	-5.54	-8.98	-6.59
100	-6.59	-14.76	-9.63	-6.80	-6.41	-4.97	-3.82	-3.00	-2.58	-1.42	0.44	2.06	2.83	2.77	1.82	-0.55	-2.76	-3.22	-4.32	-4.06	-2.23	-1.34	-0.59	0.57	0.82	0.77	0.01	-1.81	-4.31	-4.93	-4.53	-5.38	-7.53	-4.74	-4.43	-7.61	-6.59
110	-6.59	-15.00	-9.89	-6.94	-5.31	-4.10	-3.27	-2.60	-2.16	-1.61	-0.18	1.82	2.96	2.96	1.63	-0.94	-3.16	-3.60	-4.32	-3.11	-0.64	0.65	0.92	1.14	0.83	0.57	-0.28	-1.79	-3.65	-4.49	-5.05	-6.12	-7.71	-3.70	-3.48	-6.41	-6.59
120	-6.59	-13.80	-10.42	-7.81	-5.61	-4.95	-4.54	-3.71	-2.66	-2.16	-1.00	1.02	2.52	2.48	1.21	-1.04	-3.10	-3.96	-4.32	-2.37	0.30	1.92	2.01	1.95	1.41	1.03	-0.13	-1.71	-3.99	-3.46	-4.16	-4.19	-5.18	-3.16	-3.08	-5.58	-6.59
130	-6.59	-12.25	-10.96	-9.23	-7.06	-7.69	-6.38	-4.22	-2.78	-1.65	-0.34	1.73	3.20	3.20	1.46	-0.93	-2.69	-4.31	-4.32	-1.66	0.56	2.31	2.49	2.51	1.92	1.37	0.30	-1.23	-2.95	-2.68	-3.16	-2.59	-3.23	-3.44	-3.38	-5.17	-6.59
140	-6.59	-11.08	-10.64	-10.01	-8.06	-6.75	-4.61	-2.92	-1.33	0.07	1.54	3.27	4.59	4.38	2.19	-0.29	-2.29	-4.74	-4.32	-1.55	0.28	1.73	2.49	2.51	1.83	1.32	0.42	-0.61	-2.19	-3.03	-4.19	-2.72	-2.68	-4.55	-4.16	-5.11	-6.59
150	-6.59	-10.49	-9.68	-9.40	-8.06	-6.10	-4.61	-2.68	-0.61	0.97	2.68	3.92	4.60	4.52	2.54	0.01	-2.30	-5.29	-4.32	-1.39	-0.26	0.43	1.83	2.42	1.66	0.76	-0.26	-1.44	-2.72	-3.95	-5.33	-2.74	-2.72	-5.31	-4.70	-5.30	-6.59
160	-6.59	-10.44	-8.82	-7.34	-6.33	-4.02	-3.23	-2.37	-1.26	0.18	1.73	2.74	3.40	3.43	1.39	-0.94	-2.67	-5.99	-4.32	-1.32	-0.76	-0.78	0.55	1.59	1.39	0.71	-0.34	-1.40	-2.10	-2.61	-3.47	-2.40	-2.73	-4.62	-4.26	-5.59	-6.59
170	-6.59	-10.76	-8.56	-5.71	-7.71	-4.92	-4.47	-4.03	-3.34	-1.10	1.01	1.95	2.36	2.22	0.19	-2.05	-3.84	-6.84	-4.32	-1.30	-1.03	-1.15	0.09	0.77	0.26	-0.55	-1.61	-2.59	-2.64	-2.63	-3.72	-2.79	-2.60	-3.15	-3.16	-5.81	-6.59

Correlated / Uncorrelated Directional Gain for 5GHz (Ant. Position：5G Ant.5~6)

Frequency (MHz)	5200	5300	5500	5800
Directional Gain	5.61	5.37	3.72	3.41

Note: Two 5GHz outputs drive a cross-polarized pair of linearly polarized antennas. Therefore, the results are the same for correlated and uncorrelated gains.

Ant.5~6 @5.2GHz

f=5200MHz E_total																																			
Phi(deg) Theta(deg)																																			
0	-180.00	-170.00	-160.00	-150.00	-140.00	-130.00	-120.00	-110.00	-100.00	-90.00	-80.00	-70.00	-60.00	-50.00	-40.00	-30.00	-20.00	-10.00	0.00	10.00	20.00	30.00	40.00	50.00	60.00	70.00	80.00	90.00	100.00	110.00	120.00	130.00	140.00	150.00	160.00	170.00	180.00
0	-21.37	-13.94	-13.25	-9.97	-10.27	-12.91	-11.28	-12.67	-6.43	-4.06	-1.70	-0.26	-0.73	-0.92	-0.40	-0.33	-0.91	-4.39	-6.10	-5.82	-2.31	-0.54	0.99	1.74	0.88	0.84	0.35	-1.05	-3.73	-6.83	-8.28	-13.17	-13.99	-14.99	-15.19	-18.51	-21.37
10	-21.37	-18.51	-15.28	-11.70	-8.16	-11.61	-8.04	-9.54	-4.97	-1.80	-0.02	0.33	-0.46	-0.59	0.14	0.20	-0.95	-4.29	-6.10	-5.65	-2.08	0.67	1.99	2.98	2.52	2.14	1.15	-1.06	-4.59	-8.58	-7.03	-8.32	-10.61	-12.21	-19.29	-17.79	-21.37
20	-21.37	-19.37	-14.12	-13.19	-9.64	-10.99	-9.78	-8.94	-6.15	-3.28	-1.55	-1.50	-1.88	-1.21	-0.64	-1.02	-1.19	-4.12	-6.10	-5.29	-1.70	1.00	2.09	2.51	1.92	1.66	0.92	-1.05	-4.38	-8.65	-10.05	-11.78	-10.04	-10.28	-16.35	-17.00	-21.37
30	-21.37	-15.25	-11.88	-13.59	-9.79	-10.54	-9.02	-8.10	-4.07	-1.53	0.23	-0.17	-1.24	0.44	0.65	-0.97	-1.15	-3.85	-6.10	-4.91	-1.14	0.96	2.00	2.66	2.31	2.09	1.08	-1.59	-4.96	-8.18	-7.89	-14.61	-12.21	-11.31	-13.95	-17.77	-21.37
40	-21.37	-14.28	-13.72	-12.07	-8.81	-8.16	-7.68	-7.46	-3.77	-0.57	2.10	2.31	0.95	1.18	1.01	0.26	-0.94	-3.60	-6.10	-4.59	-0.74	1.09	1.39	1.81	2.49	2.46	1.42	-1.21	-4.46	-4.94	-5.03	-11.73	-14.52	-13.25	-15.69	-20.27	-21.37
50	-21.37	-15.45	-16.05	-10.88	-9.05	-8.52	-7.88	-6.29	-3.35	-0.77	1.72	2.65	1.96	1.34	1.00	-0.30	-0.69	-3.46	-6.10	-4.33	-0.43	0.63	1.19	0.82	0.37	0.72	0.09	-2.33	-4.05	-6.62	-8.48	-12.48	-12.22	-16.65	-16.07	-19.40	-21.37
60	-21.37	-17.00	-13.73	-10.40	-10.67	-7.96	-6.60	-4.21	-1.37	0.20	2.62	3.05	2.80	1.85	1.14	0.16	-0.55	-3.43	-6.10	-4.05	0.05	0.67	1.33	0.82	-0.04	1.01	0.98	-1.44	-3.62	-7.02	-7.36	-11.71	-11.47	-17.47	-13.03	-15.54	-21.37
70	-21.37	-16.85	-14.02	-11.15	-11.57	-9.21	-8.59	-4.84	-2.48	-1.19	0.58	2.15	3.03	2.80	1.47	0.85	-0.28	-3.60	-6.10	-3.73	0.28	0.39	0.31	-0.39	-2.23	-1.04	-0.45	-2.24	-4.68	-8.84	-9.19	-11.49	-10.85	-17.66	-13.08	-13.89	-21.37
80	-21.37	-15.65	-15.97	-10.80	-9.50	-7.91	-8.51	-6.21	-3.53	-1.74	0.10	0.99	1.85	2.39	1.09	0.94	-0.28	-3.99	-6.10	-3.42	0.00	-0.18	0.00	0.22	-0.76	-0.59	-1.11	-3.76	-5.96	-9.64	-9.97	-12.50	-10.22	-15.12	-13.51	-15.40	-21.37
90	-21.37	-14.95	-16.01	-11.32	-11.02	-10.98	-9.05	-6.29	-3.23	-1.07	1.40	1.82	1.92	2.88	0.97	0.66	-0.63	-4.40	-6.10	-3.33	-0.44	-0.13	-0.07	0.28	-0.22	-0.08	-0.40	-3.60	-6.14	-10.58	-10.43	-10.51	-10.04	-12.07	-13.13	-21.20	-21.37
100	-21.37	-15.12	-16.61	-11.44	-11.68	-14.96	-8.85	-6.51	-2.90	-0.66	2.00	2.05	2.80	2.04	1.10	0.63	-1.12	-4.59	-6.10	-3.16	-0.84	0.61	0.55	1.20	1.02	1.45	0.57	-2.16	-5.08	-9.43	-11.41	-13.92	-11.51	-11.69	-12.58	-19.21	-21.37
110	-21.37	-15.88	-15.55	-11.41	-11.38	-13.76	-8.05	-6.15	-2.21	0.04	3.01	3.10	2.29	1.90	0.74	0.68	-1.50	-4.48	-6.10	-3.44	-1.44	1.40	1.32	1.55	2.52	2.26	1.41	-0.96	-3.66	-6.99	-8.11	-14.79	-13.14	-10.68	-12.71	-14.35	-21.37
120	-21.37	-16.83	-14.14	-12.68	-12.95	-13.02	-9.30	-6.94	-4.34	-1.48	1.47	1.65	0.87	1.38	0.47	0.41	-1.74	-4.27	-6.10	-4.08	-2.17	1.94	2.29	2.36	4.32	4.94	4.09	0.90	-2.00	-7.17	-6.92	-15.69	-10.37	-9.50	-14.31	-13.36	-21.37
130	-21.37	-17.69	-12.80	-11.29	-11.98	-9.83	-9.87	-9.08	-4.51	-1.23	1.24	1.50	0.40	1.29	0.68	-0.13	-1.81	-4.19	-6.10	-4.90	-2.25	1.86	2.51	3.21	4.68	**5.61**	4.62	1.50	-0.86	-5.81	-4.31	-11.95	-9.21	-8.82	-14.08	-14.95	-21.37
140	-21.37	-18.10	-10.99	-9.97	-10.14	-12.72	-7.75	-6.69	-2.97	-0.98	0.26	0.21	-0.24	1.19	0.56	-0.74	-1.63	-4.36	-6.10	-5.51	-1.69	1.17	1.06	1.97	1.46	1.74	1.48	-1.22	-4.33	-13.11	-8.46	-14.65	-10.61	-11.01	-13.71	-17.65	-21.37
150	-21.37	-18.15	-10.59	-9.27	-10.06	-14.73	-6.61	-6.85	-2.68	-1.30	0.20	-0.24	-0.48	0.14	0.14	-0.44	-1.62	-4.78	-6.10	-5.56	-1.44	0.40	-0.42	0.13	-1.46	-1.57	-1.30	-3.62	-5.69	-10.74	-7.55	-14.59	-15.41	-9.82	-13.41	-17.07	-21.37
160	-21.37	-18.00	-10.84	-10.00	-8.40	-12.25	-6.72	-6.32	-3.95	-2.02	-0.14	-0.20	0.01	0.23	1.08	0.19	-2.11	-5.30	-6.10	-5.13	-1.56	-0.35	0.79	1.31	1.29	2.14	1.73	-0.46	-3.76	-7.78	-6.01	-16.42	-11.79	-9.10	-12.63	-14.17	-21.37
170	-21.37	-18.22	-11.38	-10.28	-10.87	-13.62	-8.33	-7.32	-4.08	-2.23	0.10	0.35	-0.16	0.65	1.01	-0.68	-2.45	-5.70	-6.10	-4.64	-1.33	-1.26	-0.47	-0.05	0.79	1.91	1.09	-1.64	-4.71	-10.15	-10.20	-17.67	-14.19	-10.71	-14.70	-12.76	-21.37

Ant.5~6 @5.3GHz

f=5300MHz E_total																																			
Phi(deg) Theta(deg)																																			
0	-180.00	-170.00	-160.00	-150.00	-140.00	-130.00	-120.00	-110.00	-100.00	-90.00	-80.00	-70.00	-60.00	-50.00	-40.00	-30.00	-20.00	-10.00	0.00	10.00	20.00	30.00	40.00	50.00	60.00	70.00	80.00	90.00	100.00	110.00	120.00	130.00	140.00	150.00	160.00	170.00	180.00
0	-21.44	-14.76	-12.67	-11.18	-9.51	-12.25	-12.04	-11.16	-5.96	-3.85	-0.94	0.38	-0.55	-0.69	0.11	0.17	-1.16	-5.57	-4.85	-5.40	-2.26	-0.12	1.01	1.39	0.69	0.80	0.27	-1.11	-3.81	-6.72	-6.70	-13.73	-13.95	-14.33	-15.45	-18.47	-21.44
10	-21.44	-18.56	-15.96	-13.12	-7.80	-10.21	-7.79	-9.19	-4.80	-1.83	0.25	0.35	-0.61	0.04	0.87	0.68	-1.36	-5.01	-4.85	-5.42	-2.23	0.57	2.00	3.13	2.17	1.99	1.32	-0.66	-3.62	-7.59	-7.25	-8.31	-9.77	-12.95	-20.87	-17.47	-21.44
20	-21.44	-18.67	-15.21	-13.13	-10.00	-10.82	-9.60	-9.51	-6.09	-3.72	-1.47	-1.19	-1.75	-1.08	-0.42	-0.43	-1.50	-4.33	-4.85	-5.25	-1.88	0.95	2.41	2.94	2.00	1.82	1.20	-0.75	-3.95	-6.40	-9.54	-11.36	-10.35	-10.50	-19.63	-16.41	-21.44
30	-21.44	-15.84	-13.36	-14.77	-9.90	-11.25	-8.75	-6.13	-3.67	-1.31	0.33	0.16	-0.78	0.16	0.55	-0.60	-1.44	-3.75	-4.85	-5.00	-1.17	0.96	2.21	2.73	2.05	1.59	0.44	-2.24	-5.90	-6.99	-8.09	-13.21	-13.21	-10.96	-15.75	-16.79	-21.44
40	-21.44	-15.71	-15.68	-13.25	-9.82	-9.54	-8.03	-7.67	-3.20	-0.17	2.21	2.26	0.86	1.04	0.95	0.29	-1.30	-3.43	-4.85	-4.76	-0.81	0.94	1.63	2.15	2.50	2.42	1.39	-1.00	-4.36	-6.22	-8.99	-11.31	-13.87	-14.35	-16.62	-19.17	-21.44
50	-21.44	-17.40	-16.47	-10.54	-9.51	-9.67	-8.23	-5.83	-3.00	-0.85	1.19	2.19	1.85	1.32	1.14	-0.18	-1.22	-3.36	-4.85	-4.48	-0.59	0.44	0.90	0.87	0.71	1.20	0.00	-1.55	-3.09	-6.70	-7.16	-14.26	-11.52	-15.88	-19.27	-19.86	-21.44
60	-21.44	-18.35	-13.73	-11.59	-11.28	-8.93	-7.91	-4.49	-1.87	-0.16	1.95	2.90	2.81	2.24	1.79	0.73	-0.93	-3.59	-4.85	-4.13	-0.07	0.47	1.17	0.73	0.25	1.32	1.44	-0.80	-3.65	-6.85	-7.55	-12.76	-11.14	-15.19	-15.53	-15.89	-21.44
70	-21.44	-17.37	-15.33	-12.18	-10.27	-8.94	-9.16	-5.44	-3.22	-1.78	-0.21	1.22	2.38	2.70	1.78	1.16	-0.49	-3.88	-4.85	-3.76	0.41	0.71	1.00	0.46	-2.05	-1.25	-0.64	-2.81	-4.75	-7.87	-9.27	-13.12	-11.42	-17.29	-13.73	-13.72	-21.44
80	-21.44	-16.30	-17.17	-11.11	-9.91	-9.16	-8.57	-6.70	-3.23	-1.26	0.70	1.21	1.37	1.88	0.95	0.83	-0.42	-4.45	-4.85	-3.51	0.28	0.31	0.29	0.27	-1.03	-0.52	-0.08	-3.71	-5.45	-9.11	-8.30	-13.20	-10.90	-14.91	-13.40	-14.72	-21.44
90	-21.44	-16.08	-18.14	-11.31	-10.07	-10.72	-8.19	-5.81	-2.36	-0.42	1.74	1.77	1.65	1.97	1.15	0.88	-0.69	-4.97	-4.85	-3.48	-0.39	-0.07	-0.01	0.04	-0.64	-0.75	-0.70	-3.81	-5.95	-9.87	-11.57	-11.37	-10.04	-11.49	-12.94	-19.90	-21.44
100	-21.44	-16.71	-19.12	-11.34	-13.99	-14.85	-8.56	-6.59	-2.43	-0.23	2.13	1.97	1.60	1.93	1.02	1.13	-1.02	-5.17	-4.85	-3.69	-1.28	0.33	0.49	0.45	1.44	1.36	0.45	-2.45	-5.30	-9.93	-11.50	-13.73	-11.67	-11.27	-12.44	-19.74	-21.44
110	-21.44	-17.67	-16.54	-12.05	-12.69	-13.76	-7.50	-6.12	-2.21	0.13	3.08	3.25	2.42	2.12	0.68	1.09	-1.37	-5.03	-4.85	-4.17	-1.99	0.93	0.75	0.57	2.28	2.17	1.21	-1.18	-4.04	-7.95	-8.61	-14.89	-13.59	-11.49	-12.47	-14.60	-21.44
120	-21.44	-18.54	-14.69	-12.82	-14.42	-13.86	-10.41	-6.94	-3.78	-1.41	1.41	1.62	0.76	1.34	0.63	0.56	-1.97	-4.76	-4.85	-4.92	-2.78	1.28	1.96	1.87	3.42	4.02	3.61	0.49	-2.06	-7.79	-7.15	-14.96	-10.02	-9.99	-14.42	-13.39	-21.44
130	-21.44	-19.35	-12.22	-10.65	-11.39	-10.08	-10.02	-6.92	-4.06	-0.56	1.69	1.63	0.23	1.12	1.11	0.01	-2.62	-4.56	-4.85	-5.86	-2.65	1.29	2.47	3.13	4.24	**5.37**	4.55	1.13	-0.88	-5.59	-4.25	-12.07	-10.22	-9.42	-15.12	-14.75	-21.44
140	-21.44	-19.58	-9.73	-9.67	-10.21	-12.37	-7.12	-7.27	-2.99	-0.75	0.43	0.49	-0.43	0.85	1.18	-0.56	-2.60	-4.52	-4.85	-6.66	-1.99	0.67	0.80	2.02	2.01	2.34	1.70	-1.64	-3.83	-11.27	-8.43	-16.42	-11.10	-11.80	-13.74	-17.35	-21.44
150	-21.44	-19.04	-9.43	-8.95	-9.95	-14.81	-5.68	-6.74	-2.26	-0.67	0.97	0.55	-0.32	0.09	0.80	-0.75	-2.09	-4.67	-4.85	-6.91	-1.68	0.42	-1.33	-0.39	-0.88	-1.50	-1.69	-4.41	-6.35	-11.37	-8.15	-16.11	-15.87	-11.31	-13.56	-17.71	-21.44
160	-21.44	-18.52	-10.16	-10.30	-6.66	-12.98	-6.02	-9.30	-4.80	-2.13	0.02	-0.14	-0.32	0.13	1.06	0.12	-2.00	-4.93	-4.85	-6.60	-1.57	0.08	0.54	1.09	1.13	1.67	1.54	-0.56	-3.62	-6.56	-6.44	-14.12	-12.89	-10.59	-13.66	-15.19	-21.44
170	-21.44	-18.50	-11.18	-10.71	-11.25	-15.29	-8.27	-7.91	-4.82	-2.15	0.06	0.62	0.52	0.46	0.95	0.02	-2.21	-5.21	-4.85	-6.08	-1.36	-0.87	-0.54	-0.26	0.96	2.03	1.01	-1.86	-5.12	-10.26	-11.49	-19.28	-15.27	-12.29	-14.57	-13.70	-21.44

Ant.5~6 @5.5GHz

f=5500MHz E_total																																			
Phi(deg) Theta(deg)																																			
0	-180.00	-170.00	-160.00	-150.00	-140.00	-130.00	-120.00	-110.00	-100.00	-90.00	-80.00	-70.00	-60.00	-50.00	-40.00	-30.00	-20.00	-10.00	0.00	10.00	20.00	30.00	40.00	50.00	60.00	70.00	80.00	90.00	100.00	110.00	120.00	130.00	140.00	150.00	160.00	170.00	180.00
0	-22.34	-17.48	-13.54	-12.13	-8.43	-12.18	-11.62	-9.59	-4.94	-2.63	0.27	1.10	0.37	0.59	-0.02	0.78	1.01	0.28	-2.86	-6.95	-6.57	-6.52	-2.82	-0.02	0.96	0.91	0.34	0.87	0.34	-1.07	-3.32	-6.57	-8.14	-16.42	-14.10	-12.57	-13.65	-17.76	-22.34
10	-22.34	-18.65	-15.11	-14.59	-7.90	-10.35	-6.90	-8.91	-5.92	-2.30	0.37	0.59	-0.02	0.78	1.01	0.28	-2.86	-6.95	-6.57	-6.57	-2.54	0.12	1.86	2.72	1.91	2.55	1.66	-0.56	-3.07	-7.16	-6.57	-8.65	-10.50	-11.90	-16.39	-17.04	-22.34
20	-22.34	-16.34	-14.55	-14.65	-10.63	-11.44	-7.77	-6.66	-4.69	-2.85	-0.38	-0.40	-1.90	-1.81	-1.00	-0.25	-2.18	-5.51	-6.57	-6.99	-1.95	0.76	2.54	2.65	1.71	2.28	1.80	-0.65	-3.96	-7.34	-9.17	-11.34	-11.63	-10.41	-16.77	-15.88	-22.34
30	-22.34	-15.41	-12.96	-12.48	-12.47	-14.42	-10.10	-5.17	-3.76	-1.22	0.89	1.15	0.54	0.38	0.24	-0.17	-1.68	-4.48	-6.57	-6.85	-1.17	1.07	2.37	2.82	0.75	0.98	0.95	-0.88	-5.97	-7.48	-7.59	-10.65	-13.64	-12.48	-16.14	-16.00	-22.34
40	-22.34	-16.58	-15.34	-12.40	-11.90	-11.91	-6.90	-7.81	-3.44	-0.90	1.36	1.64	0.19	-0.31	-0.17	0.24	-1.60	-3.95	-6.57	-6.25	-0.65	1.08	1.40	1.61	2.12	1.94	0.54	-1.68	-5.32	-8.12	-7.14	-10.39	-11.22	-16.10	-14.45	-17.06	-22.34
50	-22.34	-17.68	-14.03	-6.60	-11.68	-11.78	-7.51	-4.85	-2.05	-0.91	0.84	2.19	1.96	0.64	0.88	0.13	-1.69	-3.77	-6.57	-6.46	-0.48	0.70	0.95	1.33	1.28	1.75	1.24	-1.33	-3.85	-6.21	-6.50	-12.67	-11.22	-18.21	-14.58	-19.12	-22.34
60	-22.34	-16.67	-13.81	-9.64	-12.65	-10.66	-6.06	-4.80	-1.92	-0.30	1.11	2.04	2.27	2.05	1.82	0.57	-1.68	-3.80	-6.57	-4.48	-0.13	0.62	0.49	-0.16	-0.15	0.86	1.08	-0.97	-3.64	-7.62	-6.06	-15.54	-10.93	-14.74	-13.06	-16.56	-22.34
70	-22.34	-15.80	-16.61	-10.08	-8.93	-8.01	-6.45	-5.23	-2.85	-1.23	0.08	0.77	1.58	2.66	1.87	-0.07	-1.59	-3.95	-6.57	-4.15	0.27	0.92	0.94	0.56	-0.79	-1.00	-0.95	-2.77	-4.99	-8.50	-10.28	-16.23	-10.68	-17.09	-12.11	-14.37	-22.34
80	-22.34	-15.92	-15.03	-9.60	-10.14	-8.75	-7.70	-4.62	-2.23	-0.58	1.04	0.97	1.77	2.17	1.48	0.97	-1.66	-4.12	-6.57	-4.07	0.22	1.09	0.85	0.32	-1.19	-0.53	-0.51	-3.30	-4.49	-8.88	-7.84	-13.61	-11.41	-14.98	-11.68	-14.48	-22.34
90	-22.34	-16.64	-16.54	-10.38	-12.22	-12.45	-9.73	-6.14	-2.11	-0.19	1.52	0.62	-0.09	1.86	1.74	-0.31	-1.57	-4.23	-6.57	-4.56	-0.57	0.72	0.45	-0.05	-0.85	-1.11	-1.86	-5.39	-8.11	-11.63	-13.97	-13.18	-10.78	-11.41	-12.26	-17.55	-22.34
100	-22.34	-17.38	-17.82	-12.11	-13.83	-14.30	-8.25	-6.12	-1.74	0.37	2.67	2.25	1.32	2.19	1.59	0.29	-1.27	-4.30	-6.57	-5.52	-1.79	0.26	1.28	0.83	1.13	1.11	-0.08	-3.18	-6.14	-11.16	-12.64	-14.48	-12.44	-12.40	-13.65	-21.16	-22.34
110	-22.34	-17.90	-14.72	-11.94	-13.35	-14.12	-9.00	-7.84	-2.77	-0.59	1.54	1.46	1.10	1.82	1.00	0.10	-1.21	-4.39	-6.57	-6.73	-2.92	0.08	0.84	0.01	1.87	2.37	1.24	-1.35	-4.20	-8.45	-10.31	-17.25	-15.52	-9.76	-11.68	-17.89	-22.34
120	-22.34	-18.64	-12.74	-11.39	-11.84	-11.96	-9.73	-7.70	-3.70	-2.03	0.36	0.57	-0.12	0.98	0.69	-0.25	-1.60	-4.52	-6.57	-6.04	-3.80	-0.10	1.81	0.61	1.91	2.84	2.54	-0.64	-2.68	-7.54	-7.99	-15.17	-11.42	-8.95	-12.11	-16.28	-22.34
130	-22.34	-19.62	-10.74	-9.77	-10.94	-11.01	-11.30	-9.94	-3.98	-1.58	0.27	0.76	-0.37	0.29	0.82	-0.32	-2.25	-4.68	-6.57	-9.34	-3.76	0.00	1.40	1.79	2.79	**3.72**	3.23	0.51	-2.23	-7.78	-6.71	-14.13	-10.03	-13.33	-14.74	-17.12	-22.34
140	-22.34	-19.46	-8.44	-9.20	-11.32	-12.41	-8.14	-6.12	-4.78	-2.36	-0.21	0.63	-0.37	-0.64	0.85	-0.14	-2.68	-4.82	-6.57	-10.33	-2.85	0.26	0.38	1.47	2.10	2.85	1.27	-2.06	-4.50	-12.13	-8.71	-16.58	-10.81	-12.96	-13.83	-18.25	-22.34
150	-22.34	-18.07	-9.61	-8.51	-9.51	-13.66	-6.80	-7.24	-3.06	-1.42	0.54	1.36	0.86	-1.53	0.85	0.06	-2.60	-4.92	-6.57	-10.54	-2.28	0.94	-1.22	-1.53	-1.60	-2.40	-2.36	-4.37	-8.53	-13.48	-10.28	-16.33	-18.26	-11.57	-12.76	-17.05	-22.34
160	-22.34	-17.17	-9.96	-9.10	-10.64	-15.32	-7.07	-9.97	-4.02	-2.52	-0.24	0.15	0.36	-1.33	0.66	0.59	-2.46	-5.07	-6.57	-10.09	-2.50	0.55	0.44	0.78	0.51	0.65	0.58	-1.37	-5.02	-9.11	-6.65	-14.42	-12.27	-11.10	-12.96	-16.34	-22.34
170	-22.34	-17.32	-10.46	-10.37	-11.50	-16.95	-8.40	-9.29	-5.31	-2.68	-0.56	-0.28	-0.40	-0.20	0.70	0.57	-2.67	-5.30	-6.57	-9.37	-2.80	-0.94	-0.53	-0.49	0.58	1.78	1.07	-2.25	-6.07	-11.45	-13.34	-19.72	-14.49	-11.43	-15.06	-15.35	-22.34

Ant.5~6 @5.8GHz

f=5800MHz E_total																																			
Phi(deg) Theta(deg)																																			
0	-180.00	-170.00	-160.00	-150.00	-140.00	-130.00	-120.00	-110.00	-100.00	-90.00	-80.00	-70.00	-60.00	-50.00	-40.00	-30.00	-20.00	-10.00	0.00	10.00	20.00	30.00	40.00	50.00	60.00	70.00	80.00	90.00	100.00	110.00	120.00	130.00	140.00	150.00	160.00	170.00	180.00
0	-21.11	-16.33	-10.22	-6.03	-9.04	-9.00	-10.12	-9.79	-4.82	-2.78	0.22	1.26	1.65	2.95	1.98	-0.67	-4.44	-11.67	-8.97	-5.92	-3.17	-1.28	0.53	-0.04	-0.12	0.68	-0.13	-1.86	-4.09	-7.34	-8.27	-14.83	-17.59	-11.83	-12.37	-15.41	-21.11
10	-21.11	-14.52	-11.18	-9.02	-9.35	-11.70	-4.89	-7.80	-7.03	-2.29	0.03	0.22	0.32	1.25	0.93	0.41	-3.47	-10.31	-8.97	-6.20	-2.21	-0.79	1.48	2.14	2.18	3.07	1.36	-1.53	-3.19	-6.51	-6.16	-9.08	-9.35	-10.46	-12.02	-14.52	-21.11
20	-21.11	-12.71	-9.05	-9.38	-9.94	-10.33	-5.79	-4.78	-4.31	-1.78	-0.12	0.34	-0.60	-3.02	-3.20	-1.36	-2.68	-8.32	-8.97	-6.27	-6.47	1.38	**3.41**	2.63	0.72	1.41	1.24	-0.95	-5.14	-7.88	-7.15	-8.23	-8.47	-9.61	-10.50	-13.48	-21.11
30	-21.11	-12.92	-9.62	-8.05	-9.35	-11.77	-12.12	-7.36	-3.24	-1.02	0.64	1.23	1.49	0.31	-0.73	-0.78	-2.43	-6.53	-8.97	-6.00	1.00	2.17	2.54	1.43	1.78	2.22	0.83	-0.93	-4.25	-8.50	-8.13	-7.28	-8.99	-12.20	-10.34	-14.11	-21.11
40	-21.11	-14.04	-10.80	-5.45	-9.48	-12.48	-8.58	-10.14	-4.58	-0.76	1.59	1.81	0.22	-1.42	-0.71	0.30	-2.11	-5.20	-8.97	-5.40	1.36	2.31	2.37	1.66	1.50	2.22	0.97	-2.46	-5.72	-8.13	-8.48	-9.67	-9.36	-11.95	-9.15	-15.46	-21.11
50	-21.11	-14.88	-11.10	-4.42	-11.09	-8.80	-5.95	-4.04	-1.97	-1.05	1.09	3.36	2.66	-0.14	0.29	0.29	-2.00	-4.31	-8.97	-4.66	0.69	1.08	2.34	2.07	0.96	1.21	0.71	-2.17	-4.46	-8.02	-8.49	-12.23	-9.07	-11.38	-11.90	-14.77	-21.11
60	-21.11	-13.46	-11.78	-5.26	-9.68	-6.14	-5.30	-3.17	-1.44	-1.52	-0.42	1.72	2.79	2.01	2.02	-0.02	-2.30	-3.95	-8.97	-3.77	0.35	1.99	2.39	1.51	-0.04	-0.57	-0.40	-2.65	-4.51	-7.49	-8.82	-15.83	-9.03	-11.73	-10.37	-13.58	-21.11
70	-21.11	-13.52	-11.37	-6.28	-6.78	-5.18	-6.68	-4.35	-2.34	-0.91	0.34	0.63	0.86	2.37	2.59	-0.49	-3.02	-3.77	-8.97	-3.23	0.58	2.28	1.77	0.46	-0.88	-2.17	-2.87	-3.79	-4.93	-10.03	-7.92	-19.47	-12.48	-15.

Correlated / Uncorrelated Directional Gain for 5G High/6GHz (Ant. Position：5G High/6G Ant.3~4)

Frequency (MHz)	5500	5800	6000	6800
Directional Gain	3.48	3.91	4.13	4.54

Note: Two 5G High/6GHz outputs drive a cross-polarized pair of linearly polarized antennas. Therefore, the results are the same for correlated and uncorrelated gains.

Ant.3~4 @5500MHz

E=5500MHz E_total Phi(deg) Theta(deg)	-180.00	-170.00	-160.00	-150.00	-140.00	-130.00	-120.00	-110.00	-100.00	-90.00	-80.00	-70.00	-60.00	-50.00	-40.00	-30.00	-20.00	-10.00	0.00	10.00	20.00	30.00	40.00	50.00	60.00	70.00	80.00	90.00	100.00	110.00	120.00	130.00	140.00	150.00	160.00	170.00	180.00
0	-160.00	-170.00	-160.00	-150.00	-140.00	-130.00	-120.00	-110.00	-100.00	-90.00	-80.00	-70.00	-60.00	-50.00	-40.00	-30.00	-20.00	-10.00	0.00	10.00	20.00	30.00	40.00	50.00	60.00	70.00	80.00	90.00	100.00	110.00	120.00	130.00	140.00	150.00	160.00	170.00	180.00
0	-31.12	-21.19	-11.30	-13.28	-7.62	-12.66	-6.26	-7.40	-2.08	-0.18	1.67	2.82	2.22	1.75	1.70	-0.58	0.34	-2.65	-2.44	-3.01	-1.98	1.00	-0.74	-3.25	-3.92	-2.86	-2.88	-4.29	-6.58	-9.22	-10.72	-17.00	-15.32	-17.97	-16.01	-18.13	-31.12
10	-31.12	-20.98	-12.37	-10.71	-11.51	-13.13	-8.44	-11.19	-4.53	-1.28	-0.54	-0.02	0.19	1.01	1.43	0.02	-0.02	-2.58	-2.44	-3.26	-2.74	1.03	0.62	-0.71	-1.37	-1.19	-1.09	-2.61	-5.86	-8.92	-9.13	-16.53	-15.59	-17.14	-16.36	-21.37	-31.12
20	-31.12	-21.47	-12.52	-10.99	-11.07	-15.62	-8.29	-9.22	-3.56	-1.21	0.51	1.13	0.98	0.83	-0.09	-0.13	-0.32	-2.29	-2.44	-3.74	-3.66	0.46	1.11	0.27	-1.53	-0.95	-0.10	-2.72	-5.95	-9.29	-10.14	-14.62	-12.34	-15.48	-13.62	-19.68	-31.12
30	-31.12	-21.80	-13.68	-11.63	-12.29	-13.93	-8.98	-10.40	-5.23	-2.03	0.16	0.73	0.89	1.24	0.48	-0.27	-0.27	-2.15	-2.44	-4.27	-3.69	-0.29	0.87	0.35	-0.40	0.04	0.50	-1.60	-4.68	-7.99	-8.60	-12.24	-11.78	-12.78	-10.42	-18.13	-31.12
40	-31.12	-20.22	-13.33	-10.76	-11.08	-12.72	-8.47	-9.91	-6.26	-3.88	-0.86	0.77	1.26	1.23	0.86	0.42	-0.02	-2.22	-2.44	-4.64	-3.64	-1.25	-0.33	-0.68	-0.78	0.01	0.45	-1.91	-5.57	-11.13	-7.63	-12.77	-10.22	-11.08	-12.64	-19.27	-31.12
50	-31.12	-18.26	-12.63	-12.95	-13.52	-14.62	-8.35	-6.54	-3.15	-6.88	1.60	2.34	1.84	1.51	1.33	0.81	-0.17	-2.59	-2.44	-4.79	-4.62	-2.35	-0.30	0.82	1.06	1.40	0.69	-1.38	-3.77	-9.28	-9.44	-13.90	-12.68	-10.99	-11.53	-22.02	-31.12
60	-31.12	-18.21	-13.45	-16.78	-14.69	-18.02	-8.99	-7.08	-3.21	-1.62	0.92	1.90	2.00	1.47	0.63	0.11	-0.51	-2.84	-2.44	-4.83	-5.92	-1.19	0.32	0.89	1.10	1.39	0.14	-2.63	-4.88	-9.15	-11.14	-17.20	-14.44	-11.07	-12.02	-24.07	-31.12
70	-31.12	-19.49	-17.84	-17.65	-12.79	-14.25	-5.60	-3.98	-2.32	-1.47	0.76	1.19	1.37	1.22	-0.03	-0.03	-0.11	-3.02	-2.44	-4.90	-5.59	0.13	0.36	0.55	0.43	1.06	1.00	-0.68	-2.36	-6.44	-8.10	-14.79	-14.40	-11.01	-14.10	-24.32	-31.12
80	-31.12	-18.71	-13.47	-12.79	-13.58	-14.45	-8.13	-7.33	-4.11	-2.36	0.25	1.36	1.50	1.37	1.08	1.17	0.49	-3.00	-2.44	-4.97	-3.63	1.09	0.45	-1.32	-0.21	1.45	1.10	-1.19	-2.96	-7.19	-7.62	-16.01	-11.81	-15.26	-13.54	-22.60	-31.12
90	-31.12	-18.09	-13.04	-14.37	-18.95	-15.73	-11.26	-10.35	-6.68	-3.33	-0.79	1.20	1.83	2.28	0.40	1.35	0.43	-2.92	-2.44	-4.89	-2.42	1.27	0.63	-2.42	0.70	1.51	1.36	-0.88	-2.62	-7.03	-7.81	-16.03	-10.47	-13.34	-11.72	-21.25	-31.12
100	-31.12	-19.99	-18.50	-13.17	-13.54	-13.51	-11.11	-8.84	-5.34	-2.47	0.64	1.77	2.03	0.96	0.44	0.61	-0.14	-2.93	-2.44	-4.60	-1.77	0.66	0.95	-1.26	1.05	0.28	-0.09	-2.26	-3.13	-7.43	-7.22	-20.25	-11.34	-11.81	-10.78	-22.00	-31.12
110	-31.12	-18.70	-19.34	-16.42	-11.61	-14.03	-6.33	-4.96	-1.90	0.15	2.57	2.70	1.14	1.02	1.51	1.00	-0.49	-3.05	-2.44	-4.18	-1.35	-0.02	0.47	-1.57	0.32	-0.31	-0.02	-1.95	-3.00	-7.53	-6.67	-22.06	-9.81	-11.14	-11.11	-24.22	-31.12
120	-31.12	-15.46	-15.11	-12.86	-11.93	-14.32	-7.01	-4.92	-1.53	0.40	2.00	2.86	1.47	0.82	1.16	2.18	-0.41	-3.23	-2.44	-3.75	-0.81	-0.31	0.22	-2.21	0.74	0.84	0.16	-2.30	-3.79	-10.18	-9.46	-16.30	-8.87	-9.01	-10.50	-23.66	-31.12
130	-31.12	-14.96	-10.78	-8.70	-13.02	-13.96	-7.49	-6.93	-3.96	-1.77	1.05	1.30	0.62	1.44	1.44	2.71	-0.49	-3.38	-2.44	-3.39	-0.37	-0.12	0.70	-1.48	0.50	1.10	0.92	-1.26	-3.18	-11.08	-6.79	-19.52	-8.49	-8.62	-10.33	-22.28	-31.12
140	-31.12	-17.10	-10.58	-9.27	-13.11	-14.33	-11.86	-11.51	-4.26	-6.96	1.14	1.43	1.39	2.22	1.83	2.22	-1.02	-3.43	-2.44	-3.11	-0.22	0.34	0.77	-0.95	-0.61	0.43	2.15	0.26	-1.65	-6.38	-5.01	-19.29	-8.24	-13.54	-12.86	-23.82	-31.12
150	-31.12	-18.56	-12.91	-12.79	-12.11	-17.17	-6.88	-6.81	-1.69	0.52	2.54	3.13	2.16	1.27	1.28	1.00	-1.43	-3.34	-2.44	-2.91	-0.31	0.95	0.97	-2.07	0.26	1.06	2.05	0.39	-1.36	-7.98	-4.91	-22.31	-9.06	-13.63	-12.30	-29.41	-31.12
160	-31.12	-16.62	-14.30	-11.33	-10.84	-12.87	-6.29	-6.64	-6.90	1.74	**3.48**	3.45	1.92	0.38	1.61	1.17	-1.54	-3.17	-2.44	-2.79	-0.20	0.24	-1.00	0.52	-0.65	0.95	1.71	1.30	-0.49	-2.47	-6.19	-6.20	-20.53	-10.91	-10.34	-9.91	-22.87	-31.12
170	-31.12	-16.03	-15.76	-13.19	-12.22	-13.51	-10.40	-13.96	-6.32	-6.49	1.68	2.82	2.34	-0.08	0.62	1.18	-1.60	-3.01	-2.44	-2.71	0.24	-1.00	0.52	-0.65	0.95	1.71	1.30	-0.49	-2.47	-6.19	-6.20	-20.53	-10.91	-10.34	-9.91	-22.87	-31.12

Ant.3~4 @5800MHz

E=5800MHz E_total Phi(deg) Theta(deg)	-180.00	-170.00	-160.00	-150.00	-140.00	-130.00	-120.00	-110.00	-100.00	-90.00	-80.00	-70.00	-60.00	-50.00	-40.00	-30.00	-20.00	-10.00	0.00	10.00	20.00	30.00	40.00	50.00	60.00	70.00	80.00	90.00	100.00	110.00	120.00	130.00	140.00	150.00	160.00	170.00	180.00
0	-180.00	-170.00	-160.00	-150.00	-140.00	-130.00	-120.00	-110.00	-100.00	-90.00	-80.00	-70.00	-60.00	-50.00	-40.00	-30.00	-20.00	-10.00	0.00	10.00	20.00	30.00	40.00	50.00	60.00	70.00	80.00	90.00	100.00	110.00	120.00	130.00	140.00	150.00	160.00	170.00	180.00
0	-30.63	-16.37	-9.41	-12.19	-14.20	-13.65	-7.20	-9.89	-6.49	-2.83	-1.55	-0.69	-0.42	-0.10	2.20	1.58	-1.88	-3.14	-0.53	-3.25	-2.24	1.77	0.34	-1.65	-3.14	-2.88	-2.37	-3.47	-6.25	-10.72	-10.95	-14.07	-11.09	-14.49	-16.86	-18.92	-30.63
10	-30.63	-17.54	-13.04	-13.11	-10.18	-14.32	-11.57	-11.07	-4.87	-2.56	-1.47	-0.35	-0.27	0.54	2.70	2.94	-0.70	-3.05	-0.53	-3.85	-3.32	1.38	0.98	0.25	-0.82	-0.47	-0.02	-1.86	-5.45	-9.94	-7.13	-12.95	-15.36	-18.59	-14.49	-18.69	-30.63
20	-30.63	-19.43	-13.19	-11.19	-11.77	-22.80	-7.29	-7.11	-3.64	-2.26	-0.95	-0.23	-0.96	-0.12	1.95	2.24	-0.77	-2.81	-0.53	-4.05	-2.42	2.28	1.53	0.70	0.02	-0.60	-0.21	-0.89	-4.38	-7.67	-6.51	-11.42	-12.11	-14.57	-11.13	-17.36	-30.63
30	-30.63	-20.63	-12.68	-11.57	-9.04	-11.64	-6.54	-12.55	-5.11	-2.80	-1.53	-0.84	-0.27	0.95	1.71	0.67	-1.34	-2.57	-0.53	-3.71	-1.61	2.14	1.69	0.25	0.28	0.53	0.50	-1.54	-4.64	-8.09	-6.77	-10.62	-10.16	-11.34	-11.76	-18.34	-30.63
40	-30.63	-20.68	-12.86	-11.23	-12.19	-13.19	-8.11	-9.37	-4.66	-2.39	-0.69	-0.31	0.21	1.45	1.84	0.82	-1.26	-2.53	-0.53	-3.22	-2.61	0.30	1.27	1.68	1.46	1.33	1.02	-1.42	-4.04	-8.01	-6.71	-13.74	-9.92	-12.05	-12.04	-22.36	-30.63
50	-30.63	-19.61	-12.63	-8.01	-11.63	-16.99	-11.11	-9.66	-3.90	-2.07	-0.08	0.66	0.97	1.32	1.71	1.06	-0.96	-2.82	-0.53	-2.83	-3.65	-0.10	1.68	2.24	2.53	3.03	1.98	-0.59	-3.47	-10.37	-9.52	-16.39	-9.46	-9.05	-11.47	-23.58	-30.63
60	-30.63	-18.73	-14.39	-13.92	-11.46	-16.58	-7.34	-4.79	-2.64	-1.71	0.91	1.74	1.60	1.60	2.49	2.28	-1.55	-3.43	-0.53	-2.52	-2.60	0.49	1.67	1.25	-0.09	-0.16	-0.51	-2.29	-3.85	-6.73	-8.60	-17.45	-13.58	-10.21	-11.79	-21.45	-30.63
70	-30.63	-18.71	-15.57	-17.93	-11.37	-15.29	-5.22	-4.25	-3.72	-2.77	-0.17	1.69	2.66	1.36	1.25	2.07	-2.49	-4.05	-0.53	-2.22	-1.39	1.38	0.94	-1.53	1.33	2.77	2.28	0.15	-2.13	-6.56	-7.40	-18.46	-13.83	-14.37	-13.76	-20.93	-30.63
80	-30.63	-18.86	-17.25	-13.95	-7.49	-10.44	-6.78	-4.83	-2.46	-0.91	0.56	1.01	1.64	1.20	1.12	1.75	-2.32	-4.32	-0.53	-1.90	-0.55	2.03	0.19	-2.96	0.39	1.46	1.46	-0.68	-2.33	-7.15	-7.95	-17.15	-11.01	-11.58	-11.40	-19.12	-30.63
90	-30.63	-18.68	-12.64	-12.27	-14.27	-16.76	-9.02	-6.57	-6.05	-3.45	-0.21	1.49	1.32	0.65	1.70	2.01	-1.86	-4.17	-0.53	-1.62	-0.25	2.41	0.94	-1.11	0.52	1.03	1.00	-1.19	-2.69	-6.76	-8.32	-15.03	-10.83	-9.77	-10.29	-17.44	-30.63
100	-30.63	-19.71	-13.69	-12.55	-12.64	-12.47	-11.63	-6.36	-4.34	-2.12	1.18	2.75	2.74	0.88	1.47	1.00	-2.02	-3.63	-0.53	-1.45	-0.38	2.62	1.19	-1.49	-0.39	0.18	-5.14	-2.49	-3.76	-8.94	-7.11	-24.00	-12.99	-9.42	-10.05	-17.06	-30.63
110	-30.63	-20.60	-14.56	-12.18	-8.31	-12.01	-5.74	-6.51	-2.08	0.22	2.78	3.09	2.96	1.86	2.34	1.63	-2.39	-3.49	-0.53	-1.44	-0.43	2.44	0.86	-0.98	0.28	1.03	0.37	-2.55	-4.12	-9.28	-7.60	-17.46	-9.53	-10.38	-10.75	-19.92	-30.63
120	-30.63	-17.97	-12.07	-10.06	-9.07	-14.42	-5.14	-5.53	-2.20	-0.36	1.87	1.39	2.24	0.90	2.24	2.45	-2.07	-3.21	-0.53	-1.57	-0.28	2.25	1.34	-0.61	0.78	1.18	1.43	-0.86	-2.55	-9.63	-8.14	-19.60	-9.96	-12.88	-10.75	-20.20	-30.63
130	-30.63	-16.72	-9.99	-9.63	-12.42	-12.20	-7.08	-6.01	-4.89	-2.69	0.95	0.69	1.86	1.22	1.88	3.25	-1.43	-2.95	-0.53	-1.80	-0.26	2.23	1.60	-0.43	1.53	1.72	2.13	-0.25	-2.89	-7.94	-7.74	-21.38	-11.19	-14.03	-11.04	-19.06	-30.63
140	-30.63	-17.93	-10.24	-10.88	-12.28	-14.72	-11.41	-12.40	-4.65	-1.23	0.93	2.02	2.42	2.53	2.90	3.61	-1.08	-2.69	-0.53	-2.10	-0.70	1.69	2.03	-1.12	1.92	2.12	1.82	-0.82	-2.59	-8.32	-5.53	-19.29	-8.94	-14.35	-11.54	-20.23	-30.63
150	-30.63	-18.26	-13.50	-11.40	-10.46	-14.76	-5.78	-6.26	-1.08	1.32	3.54	3.74	3.19	3.00	3.15	3.44	-1.16	-2.49	-0.53	-2.44	-1.79	1.46	1.51	-0.84	1.18	1.59	1.44	-0.54	-1.97	-7.75	-4.48	-15.95	-9.08	-11.34	-11.87	-25.18	-30.63
160	-30.63	-16.84	-13.67	-11.66	-10.71	-12.65	-6.65	-6.19	-1.18	0.64	2.74	3.00	2.39	1.91	2.60	2.36	-1.72	-2.46	-0.53	-2.76	-3.00	1.31	1.75	-0.37	1.40	0.71	0.99	-0.37	-1.93	-9.35	-5.42	-12.90	-9.81	-14.66	-13.69	-22.43	-30.63
170	-30.63	-17.15	-14.31	-11.93	-9.80	-9.84	-6.65	-9.80	-3.12	0.76	3.29	**3.91**	2.55	1.01	1.29	1.22	-2.05	-2.71	-0.53	-3.02	-3.08	0.82	1.26	-1.06	0.80	1.46	1.30	-0.49	-1.61	-6.69	-7.67	-21.21	-9.82	-13.05	-10.02	-17.53	-30.63

Ant.3~4 @6000MHz

E=6000MHz E_total Phi(deg) Theta(deg)	-180.00	-170.00	-160.00	-150.00	-140.00	-130.00	-120.00	-110.00	-100.00	-90.00	-80.00	-70.00	-60.00	-50.00	-40.00	-30.00	-20.00	-10.00	0.00	10.00	20.00	30.00	40.00	50.00	60.00	70.00	80.00	90.00	100.00	110.00	120.00	130.00	140.00	150.00	160.00	170.00	180.00
0	-180.00	-170.00	-160.00	-150.00	-140.00	-130.00	-120.00	-110.00	-100.00	-90.00	-80.00	-70.00	-60.00	-50.00	-40.00	-30.00	-20.00	-10.00	0.00	10.00	20.00	30.00	40.00	50.00	60.00	70.00	80.00	90.00	100.00	110.00	120.00	130.00	140.00	150.00	160.00	170.00	180.00
0	-30.25	-20.96	-9.73	-11.10	-11.73	-17.67	-8.59	-9.02	-3.15	-1.20	0.32	0.18	0.14	0.44	2.56	2.69	-0.82	-3.25	-0.56	-3.81	-1.72	1.63	1.33	-0.12	-2.99	-2.41	-2.64	-4.24	-7.13	-11.56	-9.80	-11.71	-9.62	-11.23	-11.57	-17.89	-30.25
10	-30.25	-21.31	-11.51	-14.96	-12.15	-18.86	-8.06	-10.30	-4.94	-2.02	-2.06	-1.48	-0.93	0.65	2.94	3.69	0.27	-2.87	-0.56	-4.25	-2.02	1.22	0.43	0.33	-0.23	-0.28	-0.01	-1.63	-5.12	-9.63	-7.76	-12.99	-17.33	-18.84	-12.21	-19.49	-30.25
20	-30.25	-21.75	-11.69	-11.24	-12.49	-20.01	-7.63	-9.46	-3.72	-1.06	-0.38	0.45	0.43	0.13	2.34	3.58	0.18	-2.53	-0.56	-4.13	-1.15	2.01	0.98	0.33	0.69	0.76	0.73	-0.54	-3.56	-7.87	-6.25	-12.95	-12.86	-12.77	-9.86	-17.17	-30.25
30	-30.25	-22.03	-11.11	-10.87	-10.45	-15.15	-8.17	-10.74	-4.37	-1.96	-0.68	-0.70	-0.65	-0.22	1.96	2.34	-0.74	-2.22	-0.56	-3.71	-1.43	1.41	1.46	1.13	1.69	1.66	1.19	-0.76	-4.50	-9.50	-7.17	-14.68	-10.31	-13.80	-9.93	-16.63	-30.25
40	-30.25	-21.25	-11.24	-11.17	-11.71	-14.77	-10.50	-9.91	-4.44	-1.59	-0.03	0.08	0.73	1.65	2.19	1.48	-1.15	-1.91	-0.56	-3.49	-3.29	1.10	2.33	2.56	2.40	2.11	1.56	-0.48	-4.42	-9.29	-6.74	-15.00	-11.99	-11.29	-10.22	-19.36	-30.25
50	-30.25	-19.43	-12.49	-11.71	-11.73	-17.11	-9.78	-8.91	-3.93	-1.91	0.11	0.05	-0.14	1.31	2.53	2.08	-0.86	-1.81	-0.56	-3.53	-3.47	1.83	2.02	1.15	0.86	1.63	1.12	-1.65	-4.42	-8.93	-11.39	-16.96	-11.34	-12.61	-12.26	-18.32	-30.25
60	-30.25	-18.72	-12.97	-13.91	-11.26	-14.98	-6.78	-5.54	-3.57	-3.04	-0.78	0.60	1.13	0.46	1.79	2.78	-0.65	-2.19	-0.56	-3.65	-2.22	1.32	-0.64	-1.93	0.51	1.34	0.94	-0.91	-3.00	-8.01	-8.72	-18.66	-12.18	-10.53	-14.31	-16.32	-30.25
70	-30.25	-19.97	-13.82	-15.56	-11.41	-14.21	-6.72	-7.65	-3.97	-1.94	0.28	0.74	1.35	1.04	2.34	3.07	-1.33	-3.05	-0.56	-3.64	-1.49	0.55	-1.08	-1.18	1.34	1.66	1.04	-0.67	-2.64	-7.02	-8.28	-17.37	-13.46	-13.39	-13.56	-18.28	-30.25
80	-30.25	-20.77	-14.84	-12.37	-9.26	-14.06	-7.20	-6.40	-3.94	-1.18	0.20	0.75	1.35	1.30	2.25	2.72	-2.38	-3.97	-0.56	-3.44	-1.16	1.20	0.90	0.35	0.44	0.62	0.37	-1.56	-3.58	-8.53	-9.92	-17.84	-11.85	-13.14	-11.92	-20.41	-30.25
90	-30.25	-19.84	-11.74	-10.13	-12.99	-13.94	-8.91	-9.65	-6.61	-3.45	-0.10	1.22	1.15	1.48	2.96	3.15	-2.56	-4.39	-0.56	-3.15	-0.97	1.95	1.47	0.71	0.26	0.46	0.11	-2.13	-3.78	-8.53	-9.16	-20.00	-12.39	-12.91	-12.12	-17.14	-30.25
100	-30.25	-18.03	-11.64	-12.29	-12.37	-13.91	-9.83	-7.89	-4.64	-2.16	0.67	1.83	1.53	1.44	2.86	3.33	-2.52	-4.27	-0.56	-2.88	-0.78	2.15	0.88	-0.74	-0.18	-0.20	-0.09	-1.92	-2.75	-8.13	-6.91	-21.86	-10.67	-9.92	-11.40	-16.75	-30.25
110	-30.25	-17.90	-12.56	-10.80	-9.29	-13.99	-7.07	-7.35	-2.29	0.25	2.63	2.62	2.28	1.52	2.78	2.70	-3.10	-4.03	-0.56	-2.72	-0.53	2.48	1.31	-1.14	0.80	0.53	0.19	-2.47	-3.38	-9.35	-6.98	-15.38	-9.27	-9.05	-9.93	-20.25	-30.25
120	-30.25	-16.24	-11.88	-9.69	-10.69	-16.88	-4.81	-4.89	-1.98	-0.89	1.64	2.37	2.50	1.34	3.51	3.10	-3.72	-3.89	-0.56	-2.69	-0.32	2.88	1.83	-0.95	-0.13	-0.21	0.39	-1.37	-2.35	-8.66	-7.46	-17.72	-9.89	-9.89	-10.30	-22.13	-30.25
130	-30.25	-15.36	-10.67	-10.81	-10.69	-11.50	-7.57	-9.00	-5.13	-3.14	-0.16	1.01	1.89	1.48	2.82	4.06	-3.76	-3.73	-0.56	-2.79	-0.43	3.23	2.29	-0.12	0.19	-0.04	1.42	-0.11	-2.44	-9.14	-6.13	-17.31	-8.53	-12.42	-11.20	-18.93	-30.25
140	-30.25	-16.27	-10.42	-9.14	-11.53	-13.61	-12.53	-14.97	-6.92	-1.03	1.95	1.15	1.24	3.06	3.21	**4.13**	-3.31	-3.40	-0.56	-3.02	-1.05	2.72	2.53	-0.34	0.91	-0.90	0.85	-0.58	-2.19	-7.69	-6.03	-17.25	-10.30	-13.97	-11.29	-18.68	-30.25
150	-30.25	-17.02	-11.96	-8.81	-12.94	-13.74	-5.90	-4.51	-0.52	1.58	3.24	2.59	2.45	3.22	3.25	3.20	-2.91	-3.05	-0.56	-3.32	-1.91	2.12	1.93	-0.46	1.02	-0.65	0.25	-0.90	-2.45	-8.14	-5.93	-15.03	-9.65	-10.69	-12.22	-21.60	-30.25
160	-30.25	-16.47	-12.54	-7.79	-12.20	-11.72	-5.42	-2.07	0.25	2.68	3.12	2.47	1.22	1.79	1.80	-2.69	-2.96	-0.56	-3.53	-2.41	2.94	2.20	1.11	1.90	1.28	1.59	-0.77	-1.89	-6.87	-6.59	-15.67	-15.27	-14.27	-12.32	-12.06	-24.08	-30.25
170	-30.25	-16.40	-17.19	-10.61	-7.36	-9.06	-8.73	-10.09	-3.22	1.16	3.63	3.79	1.97	0.84	0.61	1.27	-2.00	-3.25	-0.56	-3.51	-2.00	1.75	1.57	-0.20	0.85	1.46	1.37	-0.64	-1.92	-6.22	-7.46	-18.86	-10.27	-13.00	-10.40	-21.91	-30.25

Ant.3~4 @6800MHz

E=6800MHz E_total Phi(deg) Theta(deg)	-180.00	-170.00	-160.00	-150.00	-140.00	-130.00	-120.00	-110.00	-100.00	-90.00	-80.00	-70.00	-60.00	-50.00	-40.00	-30.00	-20.00	-10.00	0.00	10.00	20.00	30.00	40.00	50.00	60.00	70.00	80.00	90.00	100.00	110.00	120.00	130.00	140.00	150.00	160.00	170.00	180.00
0	-180.00	-170.00	-160.00	-150.00	-140.00	-130.00	-120.00	-110.00	-100.00	-90.00	-80.00	-70.00	-60.00	-50.00	-40.00	-30.00	-20.00	-10.00	0.00	10.00	20.00	30.00	40.00	50.00	60.00	70.00	80.00	90.00	100.00	110.00	120.00	130.00	140.00	150.00	160.00	170.00	180.00
0	-29.35	-17.39	-12.23	-16.48	-16.86	-13.61	-5.44	-10.07	-3.36	0.27	3.23	1.95	1.92	2.34	1.85	-1.48	-2.65	-4.87	-5.24	-6.97	-4.55	-0.94	2.77	1.35	-5.26	-4.33	-2.41	-4.06	-9.20	-14.31	-10.65	-11.89	-12.98	-14.91	-12.28	-18.06	-29.35
10	-29.35	-21.84	-14.69	-12.16	-11.26	-20.08	-9.62	-11.50	-6.50	-1.75	-0.89	-1.61	-0.76	2.69	2.93	0.37	-1.93	-5.10	-5.24	-7.95	-3.37	0.50	3.75	2.25	-2.02	-1.62	-0.14	-1.30	-4.79	-9.19	-9.64	-13.19	-13.03	-14.33	-18.48	-18.14	-29.35
20	-29.35	-24.23	-13.27	-10.38	-10.39	-14.93	-8.54	-10.14	-3.84	-0.80	-0.22	-1.32	-1.49	2.78	2.83	0.93	-1.59	-5.71	-5.24	-6.61	-2.41	0.15	2.90	2.72	1.02	1.02	0.94	-1.47	-4.56	-8.27	-8.87	-13.30	-10.42	-14.03	-13.13	-21.36	-29.35
30	-29.35	-22.66	-13.16	-9.74	-12.16	-12.95	-7.35	-6.55	-3.62	-0.14	1.07	-0.15	-0.13	3.72	3.26	0.75	-1.74	-6.10	-5.24	-6.10	-2.71	-1.29	0.79	1.25	1.12	1.46	0.96	-0.49	-4.15	-7.99	-10.09	-11.44	-9.45	-15.41	-15.49	-21.40	-29.35
40	-29.35	-21.37	-11.73	-8.46	-10.38	-11.42	-6.85	-8.71	-4.24	-1.94	-0.80	-1.27	-0.21	3.37	3.39	1.15	-1.76	-6.15	-5.24	-6.31	-3.26	-2.85	0.40	2.80	2.52	2.44	2.23	0.14	-4.19	-8.74	-10.13	-14.31	-11.23	-10.37	-11.39	-18.28	-29.35
50	-29.35	-21.84	-13.49	-12.16	-9.52	-11.20	-6.27	-

9. Radiation Pattern

Ant. Position：2.4G Ant.1

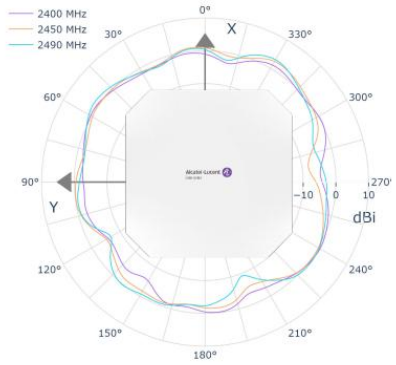

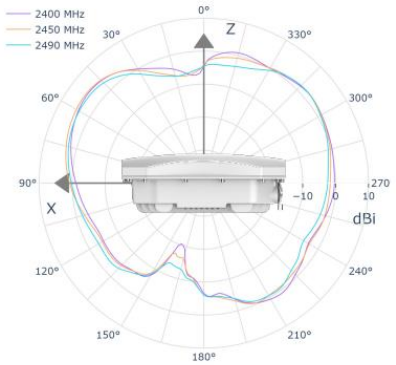

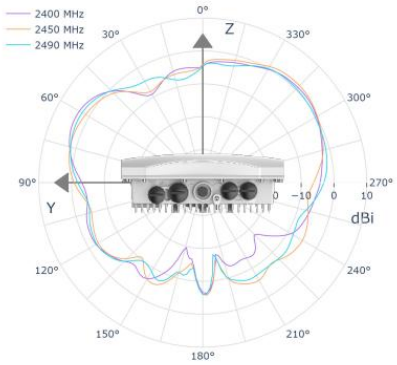

Ant. Position：2.4G Ant.2

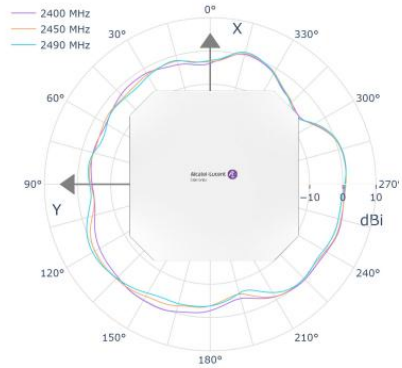

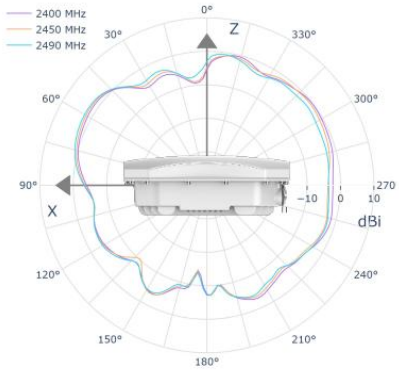

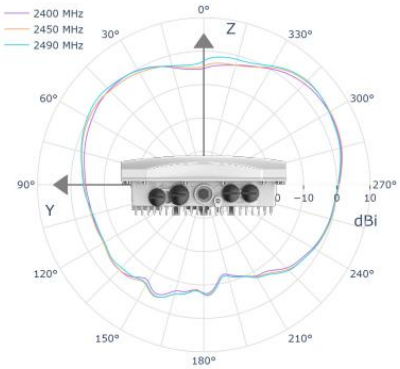

Ant. Position：5G Ant.5

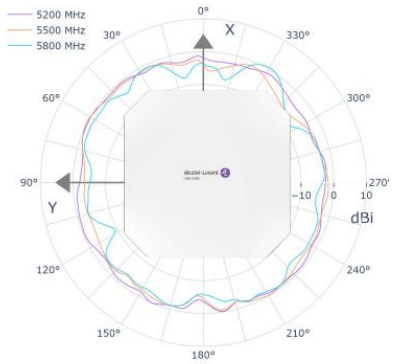

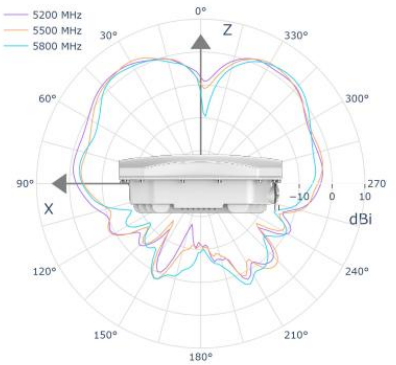

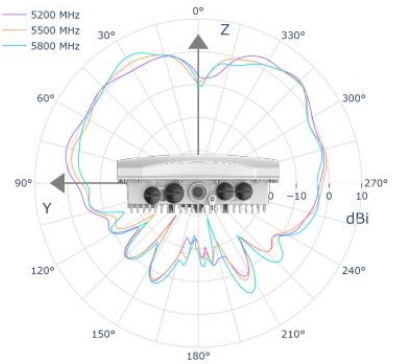

Ant. Position：5G Ant.6

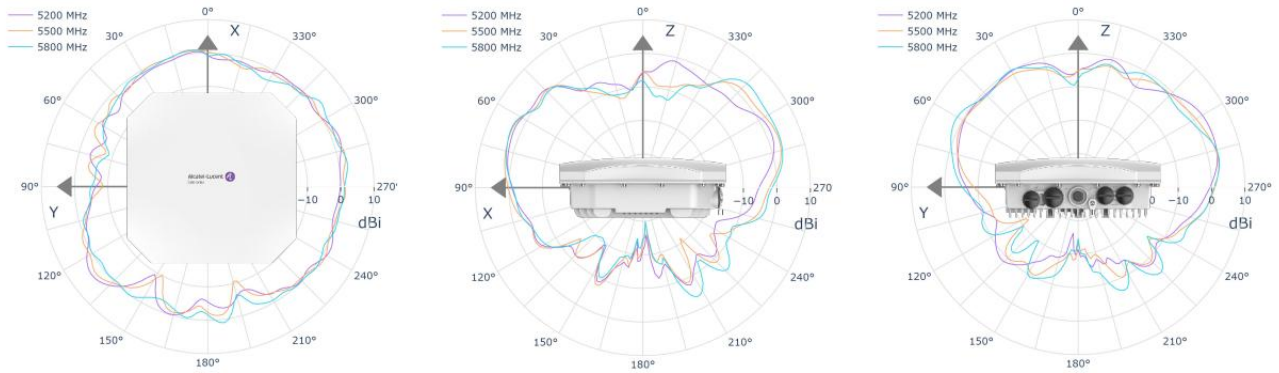

Ant. Position：5G High Ant.3

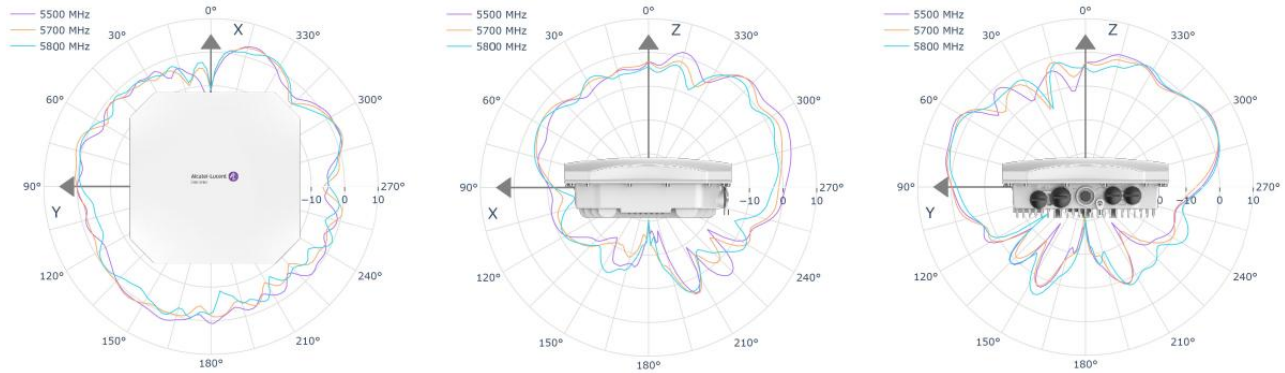

Ant. Position：5G High Ant.4

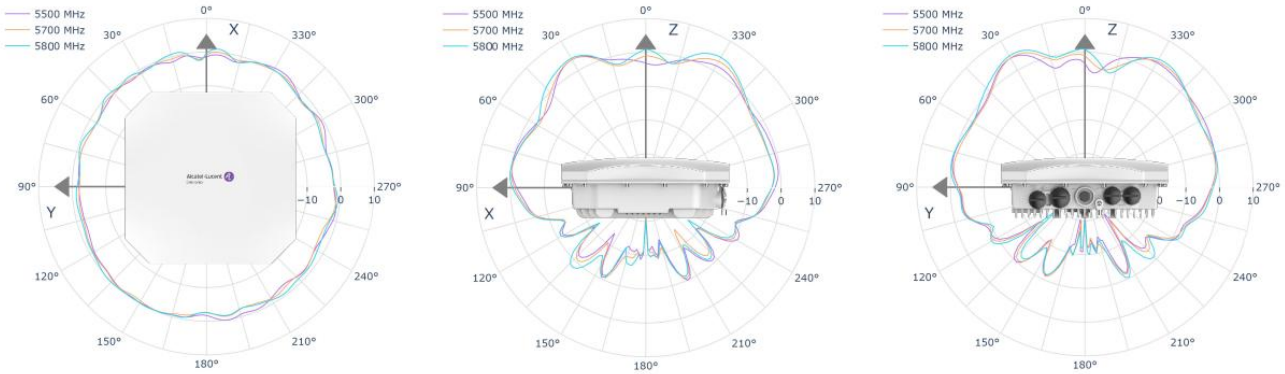

Ant. Position：6G Ant.3

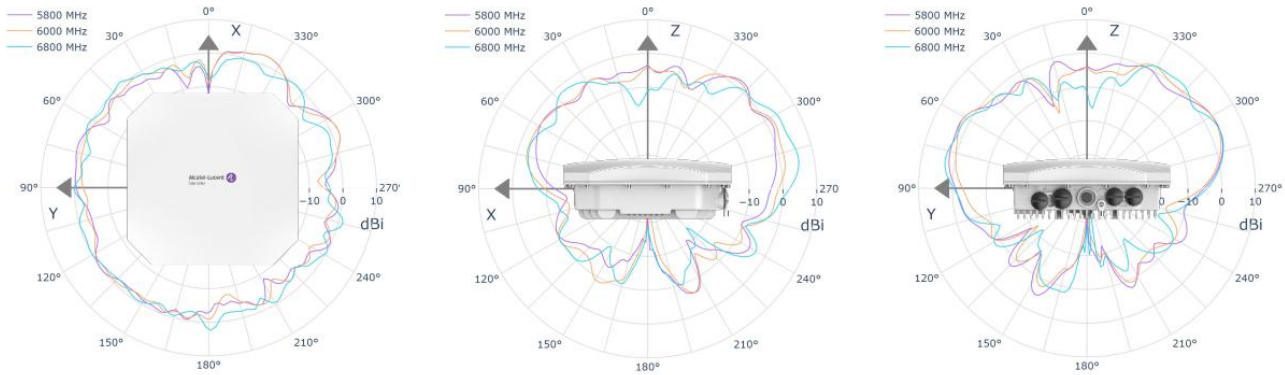

Ant. Position：6G Ant.4

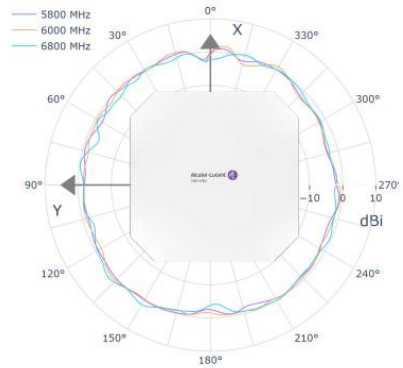

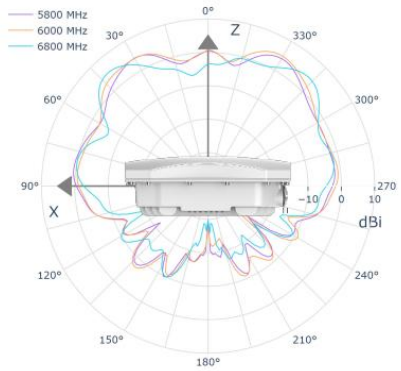

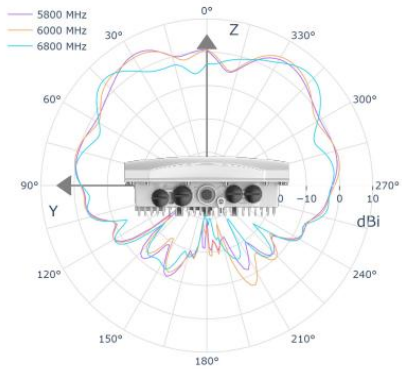

Ant. Position：2.4G BLE Ant.7

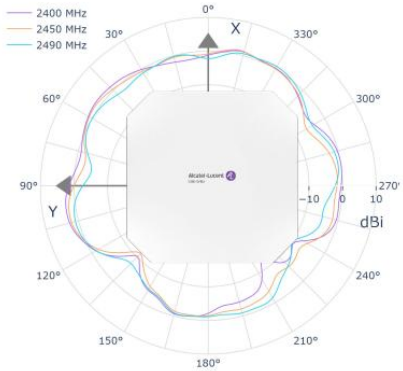

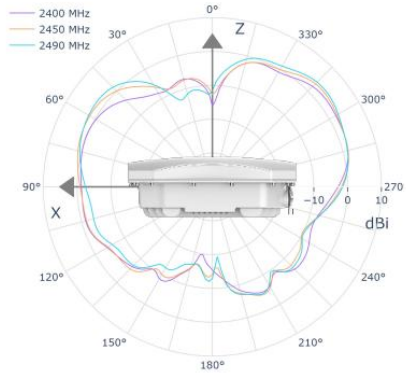

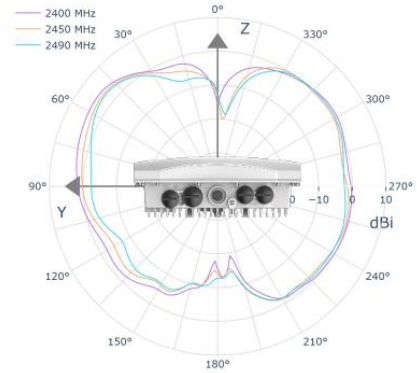

Ant. Position：2.4G Ant.8

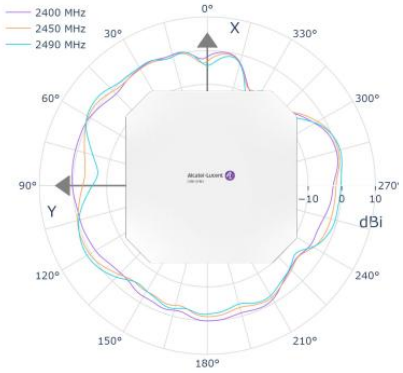

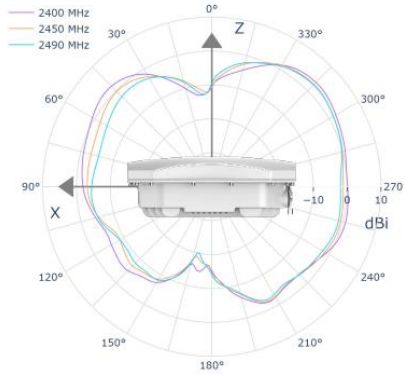

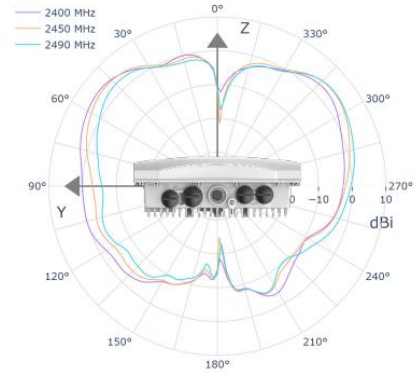

Ant. Position：5G Ant.8

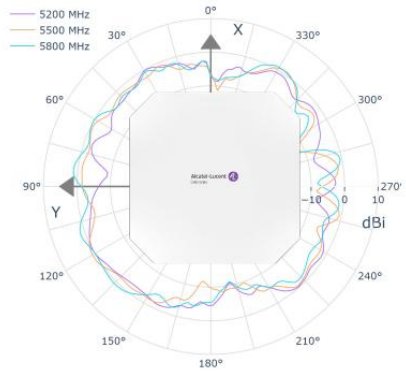

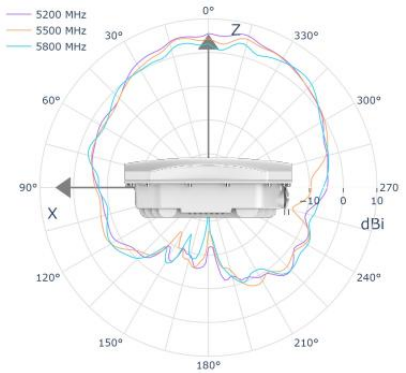

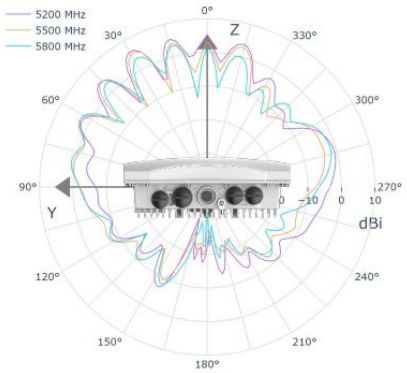

Ant. Position：6G Ant.8

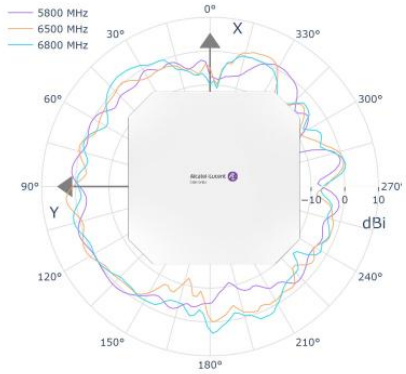

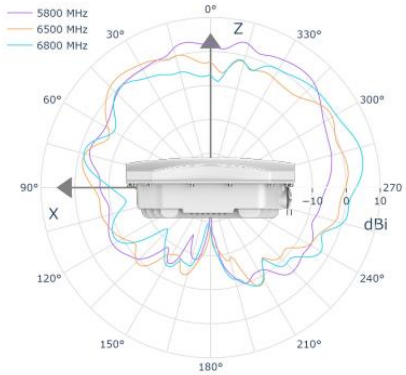

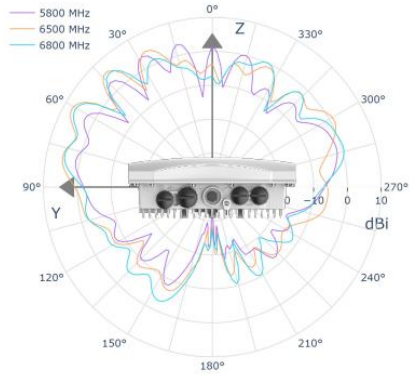

Ant. Position：GNSS-L5 Ant.9

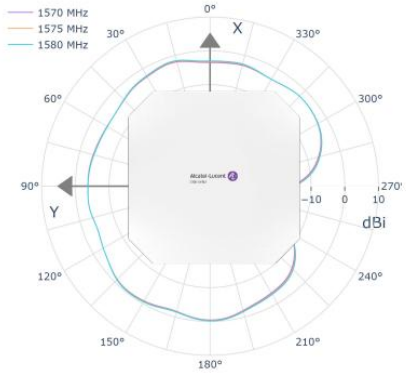

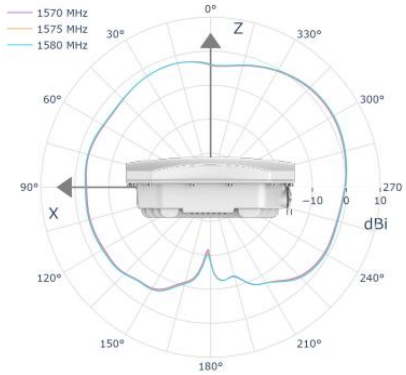

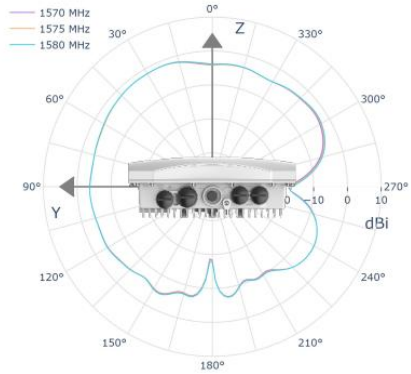

Ant. Position：GNSS-L1 Ant.8

1173 MHz
1176 MHz
1179 MHz
0°
30°
330°
60°
300°
90°
270°
120°
240°
150°
210°
180°
X
Y
−10
0
10
dBi

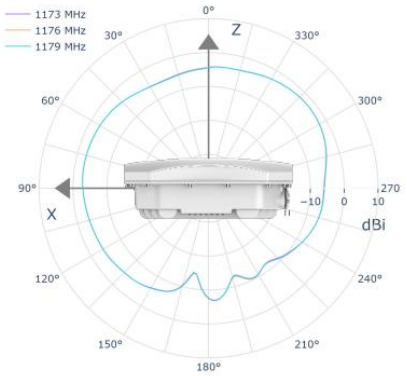
1173 MHz
1176 MHz
1179 MHz
0°
30°
330°
60°
300°
90°
270
120°
240°
150°
210°
180°
Z
X
−10
0
10
dBi

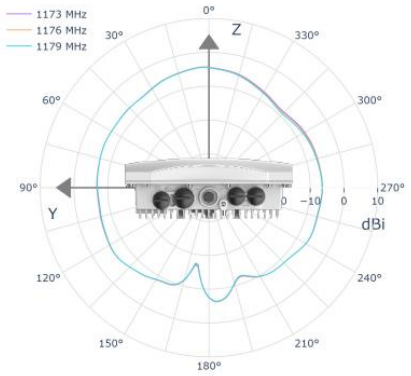
1173 MHz
1176 MHz
1179 MHz
0°
30°
330°
60°
300°
90°
270°
120°
240°
150°
210°
180°
Z
Y
−10
0
10
dBi