hohem

iSteady MT2

4-in-1 Camera Stabilizer

User Manual V1.1

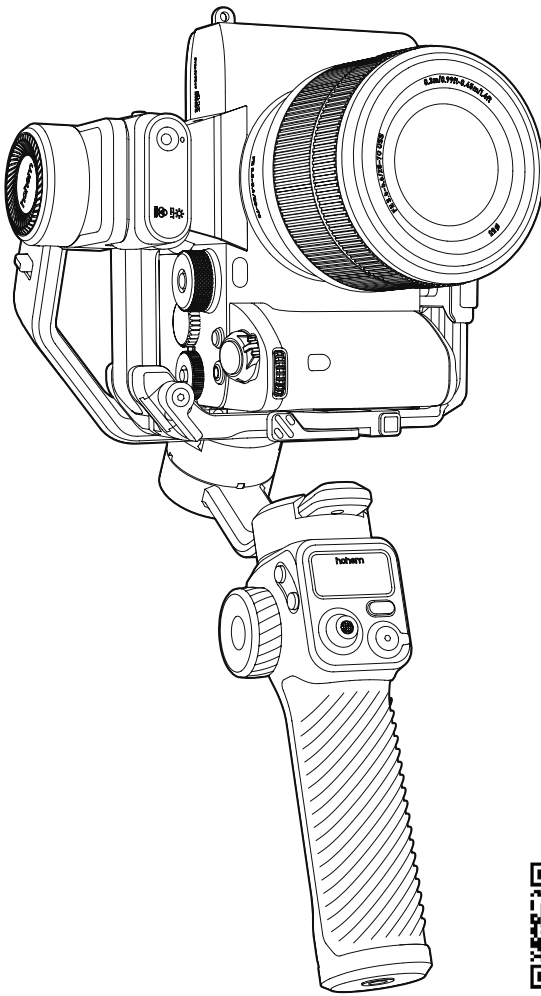

Scan the QR code to access the tutorial

Warning & Disclaimer

Thank you for purchasing the Hohem product. By using this product, you hereby signify that you have read this disclaimer and warning carefully. In addition, you understand and agree to abide by the terms and conditions herein. You acknowledge that you are solely responsible for your own conduct while interacting with this product, and for any consequences thereof. You agree to use this product only for purposes that are proper and in accordance with all applicable laws, rules, and regulations, and all terms, precautions, practices, policies and guidelines Hohem has made and may make available. Hohem accepts no liability for damage, injury, or any legal responsibility incurred directly or indirectly from the use of this product. The user shall observe safe and lawful practices including, but not limited to, those set forth in this document.

This document and all other collateral documents are subject to change at the sole discretion of Hohem. For up-to-date product information, visit www.hohem.com and click on the product page for this product.

hohem

Hohem Technology Co., Ltd.

Email
service@hohem.com

Website
www.hohem.com

Manufacturer
Hohem Technology Co., Ltd.

Connect us at Facebook

Contents

01 Product List 01

02 Introduction 02

03 Battery and Charging 03

04 Download the Hohem Joy App 03

05 Mounting and Balancing 04

Attaching the Tripod 04

Mounting A Camera 04

Mounting A Phone 08

Mounting An Action Camera 09

Balancing 10

06 How to Use the Stabilizer 13

On-board Features 13

How to set Motor Torque, Motor Angle Fine-Tuning, and Gimbal Follow Speed 15

Modes Description 16

How to pair or unpair the camera Bluetooth 16

Manual Tilt Adjustment 17

07 How to Enable the AI Tracking 17

08 OLED Display 19

Bluetooth Connection 21

09 How to Use the Hohem Joy App 21

10 Auto Calibration & Firmware Update 22

Auto Calibration 22

App Guidance 22

Firmware Update 23

11 Specifications 23

12 Warranty Terms 24

01 Product List

Before using this product, please carefully check that all the following items are included in the product package. In case that any item is found missing, please contact Hohem customer service or the local distributor.

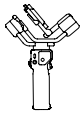

iSteady MT2 *1

Fill Light with
AI Vision Sensor *1
(Sold Separately)

Tripod *1

L-Bracket
(Arca-Swiss) *1

Camera Quick Release Plate
(Arca-Swiss) *1

Mobile Phone Quick Release
Plate (Arca-Swiss) *1

Adapter for
Action Camera *1

Thumb Screw Wrench *1

Thumb Screw *2

Type A to Type C Stabilizer
Charging Cable *1

Type C to Type C Camera
Charging & Control Cable *1

Type C to Micro USB Camera
Charging & Control Cable *1

Type C to Mini USB Camera
Charging & Control Cable *1

Type C to Multi Camera
Control Cable *1

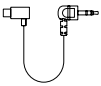

Type C to TRRS (2.5mm)
Camera Control Cable *1

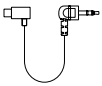

Type C to TRS (2.5mm)
Camera Control Cable *1

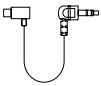

Type C to TRS (3.5mm)
Camera Control Cable *1

Storage Bag *1

User Manual *1

02 Introduction

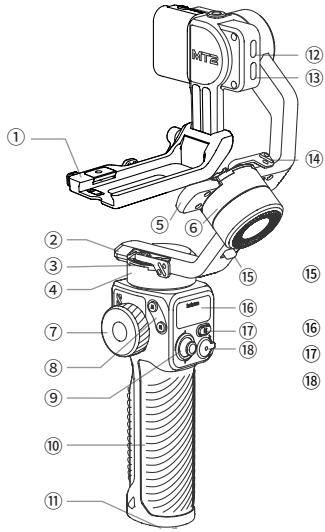

① Support Mount
② Pan Axis Arm
③ Pan Axis Arm Latch
④ Pan Axis Motor
⑤ Roll Axis Arm
⑥ Roll Motor
⑦ Multifunctional Control Wheel
⑧ Buttons for A-B Motion
⑨ Joystick
⑩ Handle
⑪ 1/4"-20 UNC Port
⑫ Type-C Reverse Charging Port
⑬ Type-C Camera Control Port
⑭ Roll Axis Arm Latch
⑮ Roll Axis Motor Lock Switch
⑯ OLED Display
⑰ M (Mode) Button
⑱ Zoom Lever & Shutter Button

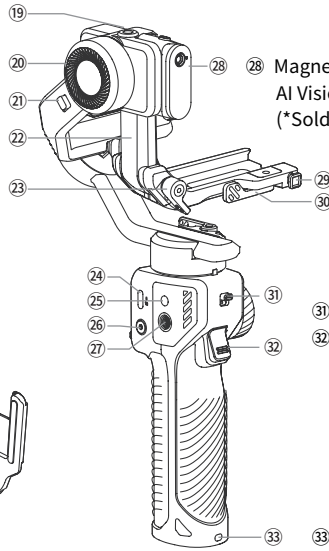

⑲ 1/4"-20 UNC Port
⑳ Tilt Motor
㉑ Tilt Motor Lock Switch
㉒ Tilt Axis Arm
㉓ Vertical Tilt Lock
㉔ USB-C Charging Port
㉕ Positioning Hole
㉖ Power Button
㉗ 1/4"-20 UNC Port
㉘ Magnetic Fill Light with AI Vision Sensor (*Sold Separately)
㉙ Mount Safety Lock
㉚ Mount Latch
㉛ Pan Motor Lock Switch
㉜ Trigger
㉝ Strap Hole

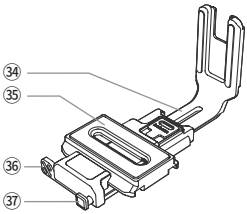

㉞ L-Bracket
㉟ Camera Quick Release Plate
㊱ Quick Release Plate Latch
㊲ Safety Lock

03 Battery and Charging

Please fully charge iSteady MT2 before using it **for the first time.**

Charging Method: To charge iSteady MT2, connect a USB adapter (Not included, 5V-2A for best) to the charging port with the provided Type A-Type C charging cable.

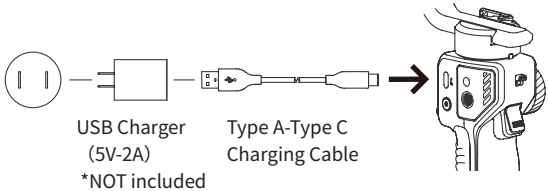

Charging Display: Charging is completed once the light stops flashing and the OLED screen shows the battery icon is full.

Reverse Charging (For Smartphone/Camera/Action Camera)

Connecting the charging cable to Type-C Reverse Charging Port of iSteady MT2.

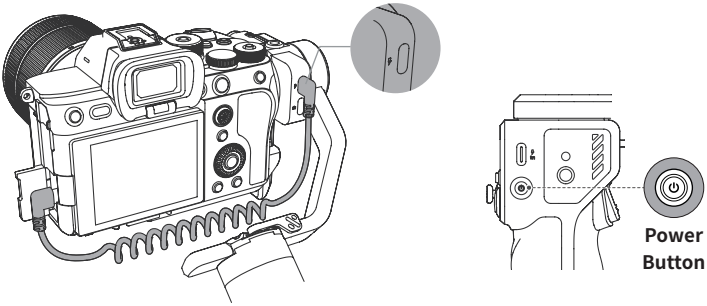

04 Download the Hohem Joy App

Download on the App Store

GET IT ON Google Play

Scan the QR code or search "Hohem Joy" in App Store or Google Play to download.
*The Hohem Joy App requires iOS 11.0 or later, Android 6.0 or later.

05 Mounting and Balancing

Attaching the Tripod

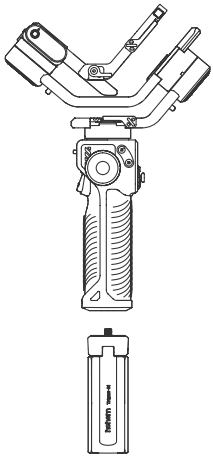

Attach the tripod to the bottom of the iSteady MT2 handle.

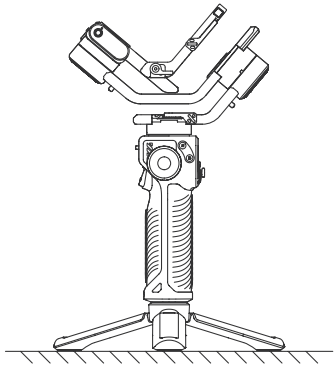

Unfold the tripod and place the iSteady MT2 on a flat surface.

Mounting A Camera

1.Unfold iSteady MT2

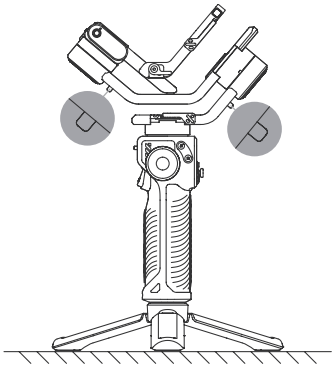

① Folded Status

Before mounting a camera, please unlock the roll and tilt motor lock switches to unlock the axes.

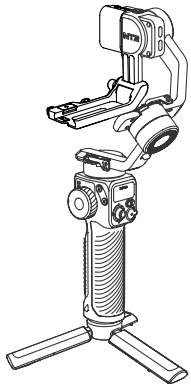

② Unfolded Status

Unfold the support mount base and roll axis arm. Then lock roll motor and tilt motor for installation of a camera.

2.Mounting the Quick Release Plate

a. Mount the camera onto the camera quick release plate, and tighten the screw.

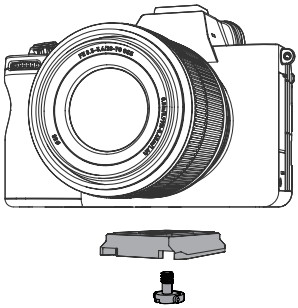

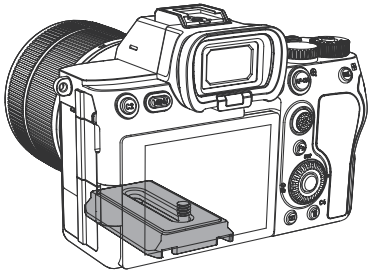

A. If you are using a long-focus lens and the camera is front-heavy, you can mount the screw with the camera at the end of the slot(as shown on the right), which makes sure more space to adjust the center of gravity for horizontal balancing.

B. It is required to tighten the screw in case of stabilizer shaking when the stabilizer is powered on.

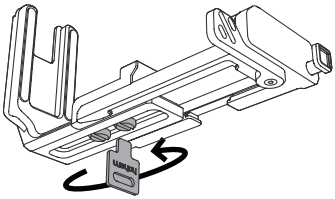

b. Loosen the L-Bracket with the thumb screw wrench (magnetically attached to the L-Bracket). Adjust the L-Bracket according to the width of the camera and tighten the screw after fitting properly.

c. Attach the camera with the quick release plate onto the L-Bracket.
d. Align the short arm of L-bracket against the handle side of the camera

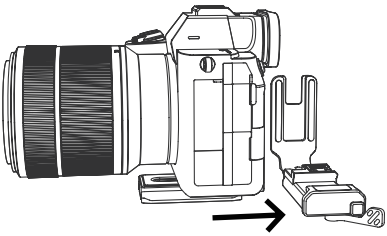

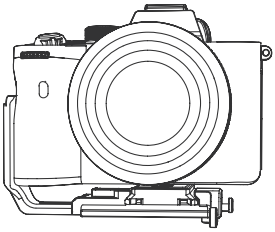

3. Mounting onto the Stabilizer

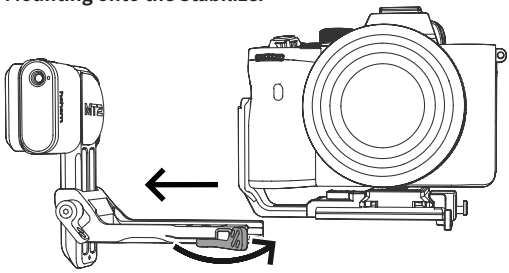

a. Unlock the mount latch, and install the camera with L-Bracket on the mount.

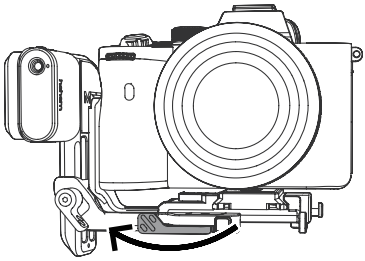

b. Lock the mount latch to ensure that the camera is tightly installed on the stabilizer.

***How to quick detach the camera from stabilizer**

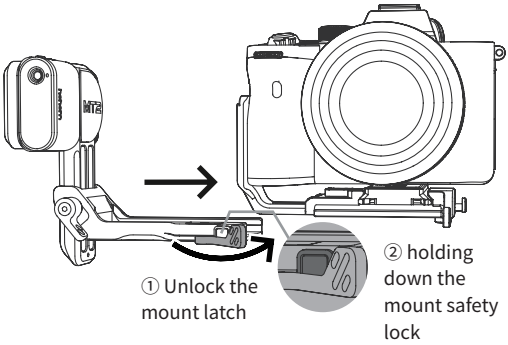

Unlock the mount latch, and remove the camera and quick release plate as a whole while holding down the mount safety lock.

4. Connect the stabilizer to the camera with a control cable to enable control of the shutter and other functions from the stabilizer.

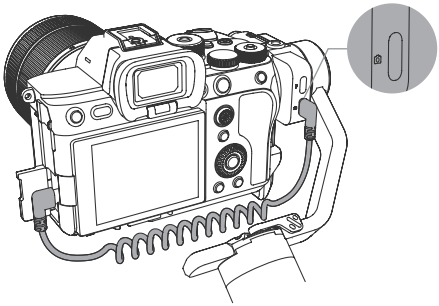

Scan the QR code to check the list of camera compatibility and control operations.

① Type-C to Type-C, Type-C to Micro USB, and Type-C to Mini USB are camera charging cables. These cables can also be used for camera control.
② Type-C to Multi is the control cable exclusively for Sony cameras, it allows to control certain Sony cameras to start/stop the filming.
③ Type C - TRRS (2.5mm), Type C - TRS (2.5mm), Type C - TRS (3.3mm) are camera control cables.

For more supported cameras of iSteady MT2 and its tutorial, please scan the QR code above to acquire up-to-date information.

5. Portrait Mode

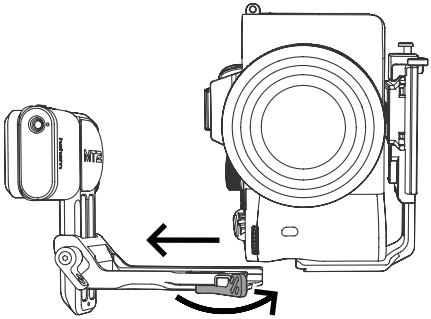

a.Rotate the camera with L-Bracket 90° to switch to vertical shooting mode.

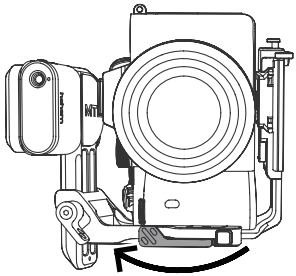

b.Insert the L-Bracket into the mount slot, and lock the mount latch.

iSteady MT2 offers dual-directional vertical installation with the L-bracket, allowing you to install it in the desired orientation based on your specific requirements.

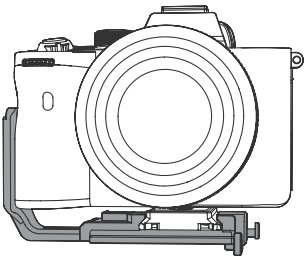

a. Install the L-bracket on the left side. You can use the flip-out screen to view the composition.

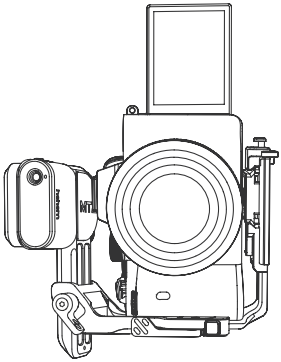

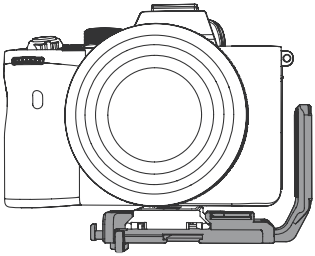

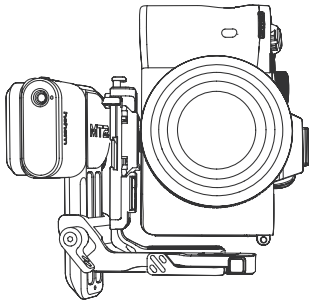

b. Install the L-bracket on the right side. You can attach accessories to the hot shoe facing outward.

Mounting A Phone

1. Mount the Phone in Landscape Mode

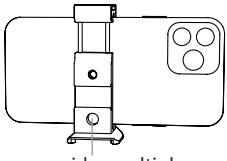

a. Mount the phone on the phone quick release plate in the middle.

*The clamp provides multiple mounting options for various accessories.

b. Attach the phone with the quick release plate onto the L-Bracket and lock the quick release plate latch.

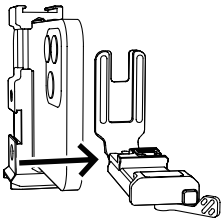

c.Insert the L-Bracket into the mount slot, and lock the mount latch.

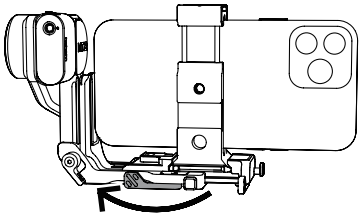

2.Mount the Phone in Portrait Mode

① Rotate the phone with L-Bracket 90° to switch to vertical shooting mode.

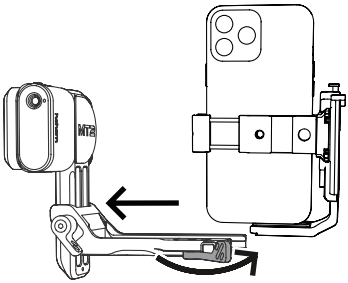

② Insert the L-Bracket into the mount slot, and lock the safety lock latch.

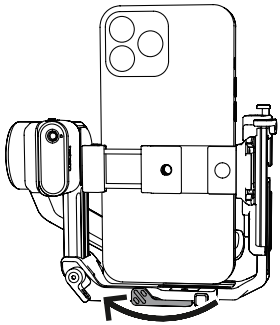

Mounting An Action Camera

1.Mount the Action Camera in Landscape Mode

① Attach the tripod adapter to the folding fingers, then mount it onto the Arca-Swiss quick release plate(for camera) and lock it in place.

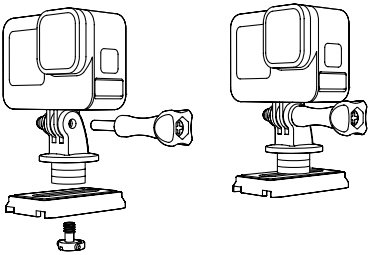

② Attach the action camera with the quick release plate onto the L-Bracket and lock the quick release plate latch.

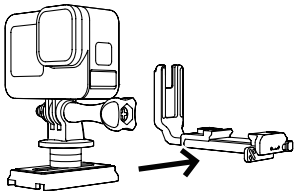

③ Loosen the L-Bracket with the thumb screw wrench(magnetically attached to the L-Bracket). Adjust the L-Bracket according to the width of the action camera and tighten the screw after fitting properly.

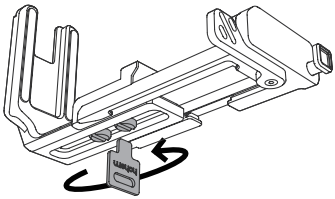

④ Insert the L-Bracket into the mount slot, and lock the mount latch.

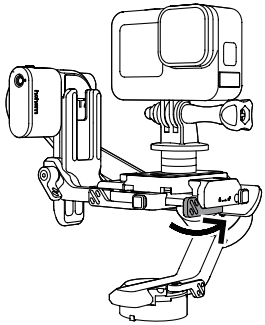

2.Mount the Action Camera in Portrait Mode

① Rotate the action camera with the L-Bracket 90° to switch to vertical shooting mode.

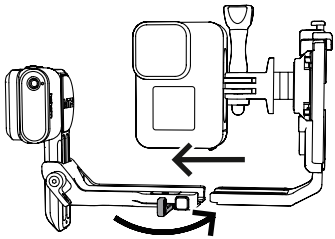

② Insert the L-Bracket into the mount slot, and lock the safety lock.

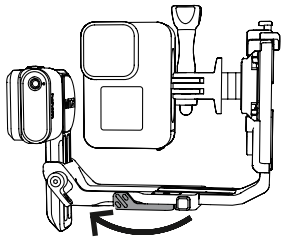

Balancing

*Here we take the mirrorless camera as an example.
The steps to balance the phone and the action camera are basically the same.

Please scan the QR code for tutorial videos of balancing.

1. Tilt Axis Balancing

a. Vertical Balancing of the Tilt Axis

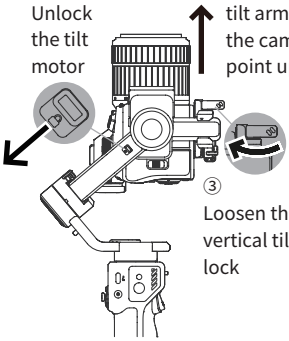

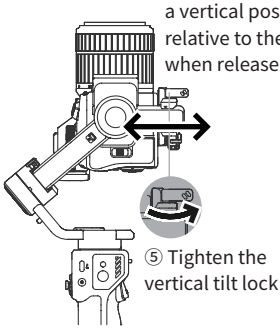

b. Horizontal Balancing of the Tilt Axis

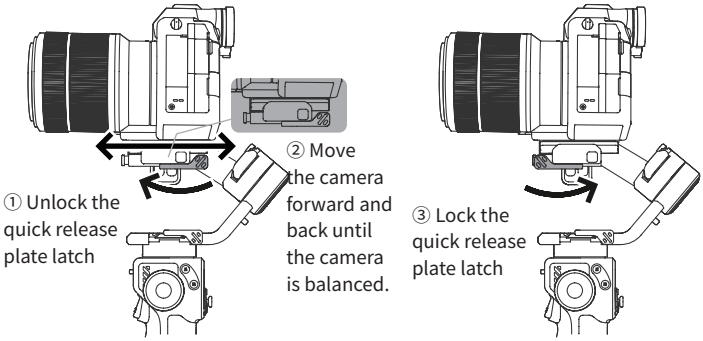

2. Balancing the Roll Axis

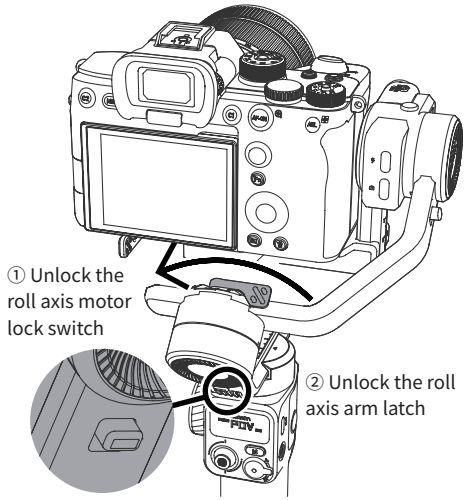

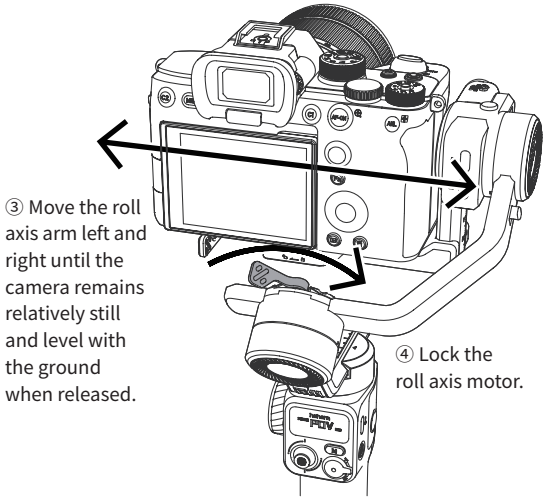

3. Balancing the Pan Axis

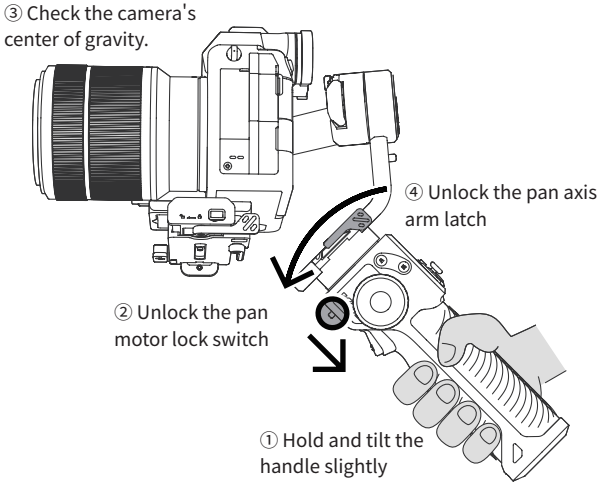

⑤ Push the pan axis to move left or right until the camera can stay still in any position.

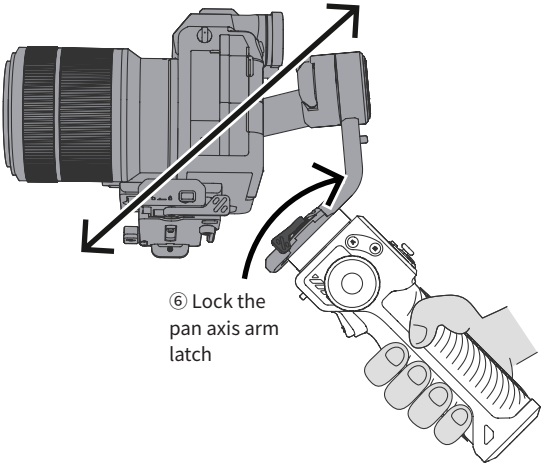

*After balancing iSteady MT2, if you need adjust the motor torque for proper using. please see the description in the chapter "How to Use the Stabilizer".

06 How to Use the Stabilizer

On-board Features

Power Button
Press and hold for 3 seconds: Power on/off

*When Powered On
Press twice: Enter the standby mode
Press once: Wake up the stabilizer

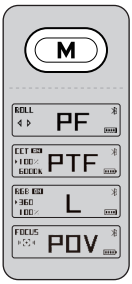

M(Mode) Button
Press once: Switch between stabilizer modes (PF-PTF-L-POV)
Press three times: "ICP" Inception mode/360° infinite spin shot (Press M button once or press trigger twice to recenter the stabilizer.)
Press five times: Auto calibration
Press seven times: Enter remote control pairing
(*The remote control is available as an optional accessory.)
Press nine times: Clear the paired remote control

Long press: Enters submenu on the OLED display, press button A/B to switch submenu, push the joystick and single press M button to set motor torque, fine tune motor angle, and pair with GoPro camera.

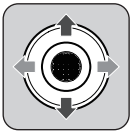

Joystick
Push up & down: Tilt rotation control
Push left & right: Pan rotation control

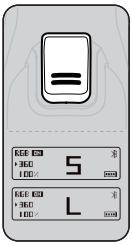

Trigger
Press on: Sport mode "S"
Press twice: Recenter the stabilizer
Press three times: Reverse 180° panning rotation
Double tap and then hold the last tap: All Lock
(Release it to switch back to the previous mode)

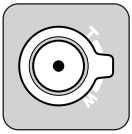

Zoom Lever
Lever up/down: Zoom in/out (T/W)
(Please make sure that your camera is on the list of supported devices for control and that the control cable is connected. For smartphones, it's only available in the Hohem Joy app or on the native camera app of certain standard protocol phones with Android 10.0 or later versions. Please ensure Bluetooth is connected.)

Shutter
Half-press: Auto-Focus
(Please make sure that your camera is on the list of supported devices for control and that the control cable is connected.)

Press once: Start/Stop Recording
Press and Hold for 1s: Take a photo
(Please make sure that your camera is on the list of supported devices for control and that the control cable is connected. For smartphones, please confirm the Bluetooth is connected.)

Press twice: Photo/video switch
(For smartphones, it's only available in the Hohem Joy app or on the native camera app of certain standard protocol phones with Android 10.0 or later versions. Please ensure Bluetooth is connected.)

Press three times: Front/rear camera switch
(Only available in the Hohem Joy app or on the native camera app of certain standard protocol phones with Android 10.0 or later versions. Please ensure Bluetooth is connected.)

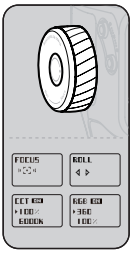

Multifunctional Control Wheel

Press twice: Focus/Roll switch
Roll rotation: +/-45°
Focus: Focus control
(Please make sure that your camera is on the list of supported devices for control and that the control cable is connected.
For smartphones, it's only available in the Hohem Joy app or on the native camera app of certain standard protocol phones with Android 10.0 or later versions. Please ensure Bluetooth is connected.)

Long Press: Turn on/off the fill light (CCT/RGB)
（Paired with the optional fill light.）

Press three times: CCT/RGB switch
(Paired with the optional fill light with AI tracking sensor)

CCT: Press once the control wheel to adjust color temperature "K" and brightness"%".

RGB: Press once the control wheel to adjust color value " ° " and brightness"%".

Buttons for A-B motion

For timelapse shooting, long-press button A/B to set the start/end point to record the A-B motion timelapse.(It needs to be used separately from the app's timelapse video template.)

Long press button A/B: A/B as start/end point (The short beep signifies the successful setting)

Press button A/B once: Quickly return to the position A/B.

Press button A/B twice: Return to the position A / position B from the current position at a constant speed. You will hear a short beep as the movement begins or ends.
(Duration by default: 1 minute. You can customize duration in hohem Joy App.)

How to set Motor Torque, Motor Angle Fine-Tuning, and Gimbal Follow Speed

1. Long press the M button to enter the OLED submenu "Motor Parameter Settings".

2. Single press button A/B, select [Motor Torque], [Motor Angle Fine-Tune], [Gimbal Follow Speed], or [Camera Bluetooth Connection].

***Motor Torque: Select [Motor Torque]**, then use the Joystick to select the motor to adjust its torque. (To perform Auto Self-Adaption, select [AUTO] and press the M button to confirm. When the icon stops flashing, it represents the self-adaptation is completed.)

***Motor Angle Fine-Tuning: Select [Motor Torque]**, then use the Joystick to select the

motor to adjust its angle.

***Gimbal Follow Speed: Select [Gimbal Follow Speed]**, then use the Joystick to select the motor to adjust its speed.

How to pair or unpair the camera Bluetooth

1. Turn on your camera's Bluetooth. (The menu options may vary on different camera models. Here we take Sony α7R IV as an example:

a. (Network) → [Bluetooth] → [Bluetooth Function] → [ON]

b. Bluetooth Pairing: (Network) → [Bluetooth] → [Pairing])

2. Long-press the M button on the iSteady MT2 handle to enter the OLED sub-menu.

3. Press the A/B button to enter the device pairing interface.

4. Use the Joystick to select [PAIR] or [UNPAIR], and press the M button to confirm the operation.

Modes Description

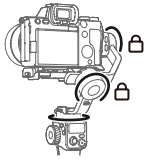

Pan Follow (PF)
Tilt & roll axis both are locked, and camera is able to move to left or right smoothly.

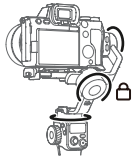

Pan&Tilt Follow (PTF)
Roll axis is locked, and camera is able to move to left/right, and tilt up/down.

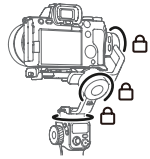

All Lock (L)
Camera stays in its current orientation.

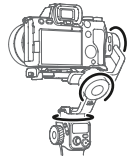

All Follow (POV)
Also known as first-person point of view. Tilt axis, roll axis and pan axis all follow the movement of the stabilizer.

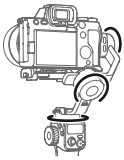

Sport Mode(S)
The follow speed of the stabilizer increases for capturing quick-moving subjects and any fast paced action.

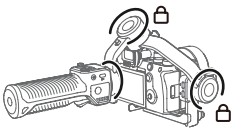

Inception (ICP)
360° infinite spinning on pan axis while holding the stabilizer horizontally.

Manual Tilt Adjustment

The tilt motor can be rotated by a certain angle by hand. Hold it for 2s and the camera tilt axis angle will be fixed at that angle.

07 How to Enable the AI Tracking

(AI vision sensor is optional)

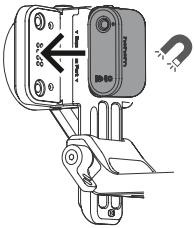

1.Install Magnetic Fill Light with AI Vision Sensor (Sold separately)

Keep the "hohem" mark upward and camera outward, then put the fill light on the magnetic joint.

2. Enable the AI vision sensor: Switch to "ON". (Indicator light turns red with fill light flashing twice.)

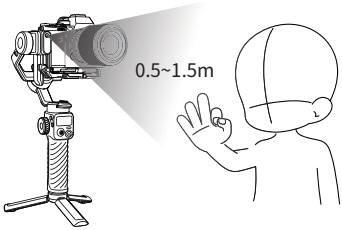

3. Gesture Control: Show gestures to the AI vision sensor from 0.5~1.5m(1.64ft-4.92ft) away.

4.Gesture "OK" to start the AI tracking (Indicator light turns green).

5.Gesture "PALM" to stop the AI tracking (Indicator light turns red).

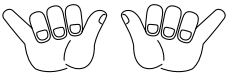

6. Make the gesture in two hands to activate the photo timer. （Extend the thumb and smallest finger while holding the three middle fingers curled.）

After the indicator blinks for 3s and turns to solid, the camera automatically takes the photo or starts/stops recording without manually pressing the shutter button. (By using this, please make sure your gimbal is paired with a mobile phone or a camera.) You can use this gesture to control taking a picture or recording while using a mobile phone or action camera. But in a mirrorless camera, controlling recording is not available.

A. It is completely normal for the magnetic alignment to become a bit hot when fill light is in long-time use and hence.
B. DO NOT make a direct contact with the hot alignment, especially the metallic part.

---

*FAQ

How to make AI vision positioning adjustments? (Customized Composition)

If the framed subject cannot be centered on the phone/camera screen, or you want to customize the AI vision position to be tracked:

1.Make sure the stabilizer & AI vision sensor are on.

2.Take the gesture towards the AI vision sensor and the indicator blinks green quickly.

3. Move in front of the screen until you find the preferred position to be tracked.

4.Show the gesture to lock the position and create ideal composition (the indicator stops flashing).

How to control AI Tracker by using iSteady MT2

When tracking other human subjects, you can use iSteady MT2 to start or stop the AI tracker.

Step 1 Power on the gimbal and AI tracking sensor.

Step 2 Let the subject make an "OK" gesture toward AI tracking sensor to confirm the tracking subject.

Step 3 Press the M button twice to start or stop AI tracking.

*It is necessary to confirm the tracking subject at first by using the hand gesture command from the person being filmed.

08 OLED Display

Home Screen

① Working Status of Control Wheel

ROLL	Roll Axis Control	FOCUS	Focus Control
CCT ON 100% 6000K	**Fill Light:** 100% Brightness	6000K Color Temperature	
RGB ON 360° 100%	**RGB Light:** 100% Brightness	360° Hue	

② Working Mode

PF	Pan Follow Mode	PTF	Pan&Tilt Follow Mode
L	All Lock Mode	POV	All Follow Mode
S	Sport Mode	ICP	Inception Mode

③ **AI Tracker Status:** AI Solid/Flashing: AI tracking Sensor Enabled

④ **Mobile Phone Connection:** Bluetooth Connected

Bluetooth Disconnected

⑤ **Camera Bluetooth Connection:** Bluetooth Connected

Bluetooth Disconnected

⑥ **Battery Level:** Current Level In Charging Low Battery

Others

1. Standby: SLEEP Stabilizer enters standby mode

2. Pan Axis Latch: UNLOCK THE LATCH Pan axis is locked, unlock the Latch

3. Error:

ERROR 01 Firmware error

ERROR 02 Gyroscope error

ERROR 03 Unbalancing/Motor Unlocking/Overloading(May be caused by external disturbance)

ERROR 03-M1 [-M1] Tilt Motor Unlocking

ERROR 03-M2 [-M2] Roll Motor Unlocking

ERROR 03-M3 [-M3] Pan Motor Unlocking

4. A-B Motion:

O→ A
O---→A Move to the position A from the current position at a constant speed.

O→ B
O---→B Move to the position B from the current position at a constant speed.

5.Auto Calibration: CALIBRATING... Calibrating

6.Firmware Update: UPDATING... Updating

7. Pair Remote Control(Sold Separately):

PAIRING...	PAIRED	PAIRING FAILED
Pairing	Paired Successfully	Pairing Failed

8.Motor Torque Adjustment:

TILT
ROLL
PAN
AUTO

Motor torque level of each axis;
AUTO represents the motor self-adaptation level (AUTO bars flashing represents motor self-adaptation is being performed; AUTO bars stop flashing represents the completion of self-adaptation).

9.Motor angle fine-tune:

TILT +2.0°
ROLL -0.5°
PAN +0.5°

The current fine-tune value of angle for each motor

10.Follow Speed Level:

Current following speed of each motor

11. Pairing & Clearing: (Camera & Action Carema)

Signal strength icon flashing represents the stabilizer is pairing with GoPro, signal strength icon stop flashing and a " " showing represents successful pairing. (Note: If no camera is paired with stabilizer within 60 seconds, signal strength icon stops flashing and icon shows, which represents failed pairing;

Clear the paired camera," " represents successful unpairing.

09 How to Use the Hohem Joy App

Bluetooth Connection

1. Power on iSteady MT2.
2. Turn on Bluetooth on Mobile Phone.
3. Launch the App Hohem Joy and follow the prompts to connect iSteady MT2 device.

***If the stabilizer's Bluetooth cannot be found or if it is being occupied by another phone, you can try clearing the stabilizer's Bluetooth information to reconnect it.**

① Long-pressing the M button for five seconds while simultaneously pushing up on the Zoom lever.

② The Bluetooth symbol on the display implies that the paired device has been cleared.

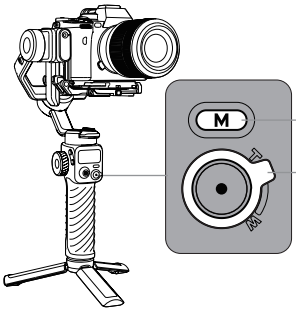

Long-pressing the M button

Pushing up on the Zoom lever

*Press and hold both of buttons for 5 seconds.

App Guidance

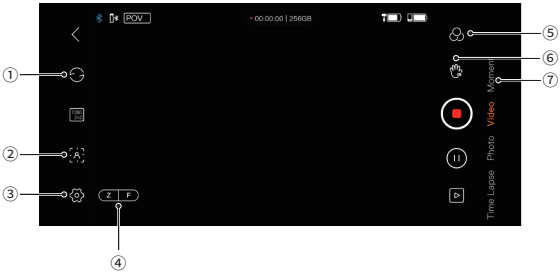

① Switch between front camera and rear camera.

② Smart Tracking: Auto face/framed object tracking

③ Settings: To set parameters for stabilizer and camera and to check out available firmware updates.

④ Focus/Zoom in or out

⑤ Beauty & Filters

⑥ Gesture Control: Gesture ✌ to enable countdown PHOTO/VIDEO. Gesture ✋ to stop it.

⑦ Moment mode: On-tap blockbuster with diverse templates in the Moment mode.

10 Auto Calibration & Firmware Update

Auto Calibration

Auto calibration could reduce drift or slight deviation caused by nearby magnetic interference or human error.

⚠ Calibration failure might happen if the stabilizer is not placed on a flat surface for calibration (e.g. calibration in a running vehicle).

1. Place stabilizer on a flat surface by means of a tripod.

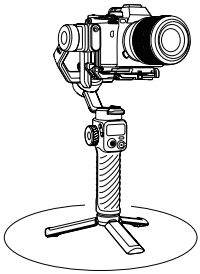

2. Double press the trigger to recenter the stabilizer.

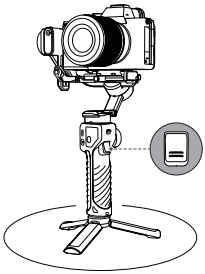

3. Press the M button five times to enable the auto calibration and you will hear a beep sound. Please do not touch the stabilizer during calibration.

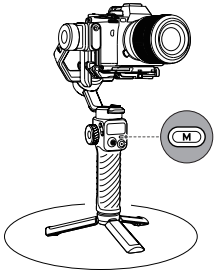

4. The second beep indicates that the calibration is completed, and the stabilizer will be recentered automatically.

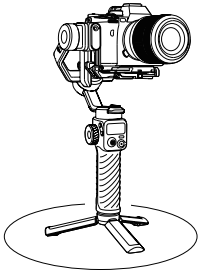

*If the calibration fails, the stabilizer will enter standby mode after two beeps. Press any button (except the joystick) to wake up the stabilizer. Then, repeat the calibration process following the steps mentioned above.

Firmware Update

You will be prompted in the Hohem Joy App if a new firmware update is available. Follow the on-screen instructions in the App to update firmware.

11 Specifications

Model	iSMT2
Weight(Stabilizer)	653g
Folded Size	262mm*186mm*64mm
Main Material	Aircraft Grade Aluminum & High-Performance Composites
Payload	1200g
Mobile Width	60mm~97mm
Battery Capacity	2600mAh 7.4V / 19.24Wh
Battery Life	17 hours (Under ideal conditions with the stabilizer fully balanced) 6-8 hours (Use AI tracking and fill light at its highest brightness) *HOHEM lab test results
Charging Time	3 Hours（5V 2A）
Mechanical Range	Pan: 360° Infinite Rotation Roll: 320° Tilt: 320°
Working Temperature	-10~45°C
Motors Protection	The motor can be protected from damage caused by improper operation by having the stabilizer powered off automatically.

12 Warranty Terms

① Customers are entitled to replacement service in case of quality deficits or functional disorder found in the product within 7 days upon the purchase date. But ensure the commodity and package with no damage, and we will offer a brand new replacement after confirming the product's problem is not related to artificial damage.

② The warranty service is subject to normal use.

③ The valid warranty period is 12 months counting from the date of selling under normal use. Accessories are excluded from the warranty service.

④ This warranty service DOES NOT cover accidental or artificial damages (including but not limited to) caused by unauthorized modification, disassembly, incorrect use and operation.

⑤ Please keep and offer the warranty card for claiming the warranty service.

CALL CENTER -Toll Free

UNITED STATES:	+1(888)9658512	Mon-Fri: 9:00AM-5:00PM(EST)
UNITED KINGDOM:	+44(0)808 2737578	Mon-Fri: 2:00PM-10:00PM(GMT +0)
CANADA:	+1(855)758-8939	Mon-Fri: 9:00AM-5:00PM(EST)
BRAZIL:	+55 (0)800 5911897	Mon-Fri: 10:00AM-6:00PM(GMT -3)

Warranty Card

User Name:

Contact No.:

Address:

Purchase Date:

Prod. Serial No.:

Failure Cause:

Service Record:

Scan the QR code to
access the tutorial

Federal Communication Commission (FCC) Radiation Exposure Statement
The device has been evaluated to meet general RF exposure requirement, The device can be used in portable exposure condition without restriction Federal Communication Commission (FCC) Radiation.
This device complies with part 15 of the FCC rules. Operation is subject to the following two conditions: (1) this device may not cause harmful interference, and (2) this device must accept any interference received, including interference that may cause undesired operation.
NOTE: The manufacturer is not responsible for any radio or TV interference caused by unauthorized modifications or changes to this equipment. Such modifications or changes could void the user’ s authority to operate the equipment.
NOTE: This equipment has been tested and found to comply with the limits for a Class B digital device, pursuant to part 15 of the FCC Rules. These limits are designed to provide reasonable protection against harmful interference in a residential installation. This equipment generates uses and can radiate radio frequency energy and, if not installed and used in accordance with the instructions, may cause harmful interference to radio communications. However, there is no guarantee that interference will not occur in a particular installation. If this equipment does cause harmful interference to radio or television reception, which can be determined by turning the equipment off and on, the user is encouraged to try to correct the interference by one or more of the following measures:
- Reorient or relocate the receiving antenna.
- Increase the separation between the equipment and receiver.
- Connect the equipment into an outlet on a circuit different from that to which the receiver is connected.
- Consult the dealer or an experienced radio/TV technician for help.
FCC Caution: Any changes or modifications not expressly approved by the party responsible for compliance could void the user’s authority to operate this equipment.
IC Statement:
This device complies with Industry Canada license-exempt RSS standard(s). Operation is subject to the following two conditions:
(1) this device may not cause interference, and
(2) this device must accept any interference, including interference that may cause undesired operation of the device .
Le pr é sent appareil est conforme aux CNR d’Industrie Canada applicables aux appareils radio exempts de licence. L’exploitation est autoris é e aux deux conditions suivantes :
(1) l’appareil ne doit pas produire de brouillage, et
(2) l’utilisateur de l’appareil doit accepter tout brouillage radio é lectrique subi, m ê me si le brouillage est susceptible d’en compromettre le fonctionnement.
The product comply with the Canada portable RF exposure limit set forth for an uncontrolled environment and are safe for intended operation as described in this manual. The further RF exposure reduction can be achieved if the product can be kept as far as possible from the user body or set the device to lower output power if such function is available.
D é claration d’exposition aux radiations:
Le produit est conforme aux limites d’exposition pour les appareils portables RF pour les Etats-Unis et le Canada é tablies pour un environnement non contrôl é .
Le produit est sûr pour un fonctionnement tel que d é crit dans ce manuel. La r é duction aux expositions RF peut ê tre augment é e si l’appareil peut ê tre conserv é aussi loin que possible du corps de l’utilisateur ou que le dispositif est r é gl é sur la puissance de sortie la plus faible si une telle fonction est disponible.

Bluetooth: 2404-2480MHz
EIRP.(MAX):-2.76dBm
Model Name: iSMT2