HOVER
CAMERA

Hover Camera Passport

User Manual

Type No.： HC-6428

Shenzhen Zero Zero Infinity Technology Co., Ltd.

© Shenzhen Zero Zero Infinity Technology Co., Ltd. 2016. All rights reserved.

HOVER
CAMERA

Table of Contents

Introduction 4
- Box Contents 4
- Diagram of HOVER CAMERA PASSPORT 5

Before you Begin 6
- Charging & Installing the Battery 6
- Downloading the Hover App 8
- Pre-Flight Check 8

Flying for the First Time 9
- Environment Requirements for Flight 9
- Status lights 10
- Powering On/Off 10
- Standby Mode 10
- Connecting to HOVER CAMERA PASSPORT from Your Mobile Device 11
- Release and Hover 12
- Manual Controls 13
- Retrieving HOVER CAMERA PASSPORT from Flight 14
- Low Battery Level 15
- Taking Photos 16
- Adjusting Exposure 17
- Recording Video 18
- Transferring Files from HOVER CAMERA PASSPORT to Your Computer 18

Intelligent Flight Modes: 20
- Auto-Follow 20
- 360 Spin 21
- Orbiting 21
- Other Hover App Functions 22

Maintenance & Care 24
- Replacing the Bottom Carbon Fiber Plate 24
- Replacing Propellers 24
- Battery Disposal 25
- Storage & Transportation 25

Appendix 26
- Specifications 26
- Compliance Information 27
- FCC Compliance Statement 27
- FCC Radiation Exposure Statement: 28
- IC RSS Warning: 28
- IC Radiation Exposure Statement: 28
- Canadian IC Warning 29

© Shenzhen Zero Zero Infinity Technology Co., Ltd. 2016. All rights reserved.

HOVER
CAMERA

How to Use This Manual

Search for Keywords

Search keywords to find a topic. In Adobe Reader, press Ctrl+F on Windows or Command+F on Mac to begin a search.

Navigating to a Topic

View a complete list of topics in the table of contents. Click on a topic to navigate to the section.

Printing this Document

This document supports high-resolution printing.

Caution:
If you are under the age of 18, only fly HOVER CAMERA PASSPORT under adult supervision.

Read the following documents before using Hover Camera Passport (HOVER CAMERA PASSPORT):

1. Box Contents List
2. User Manual
3. Quick Start Guide
4. Disclaimer & Safety Instructions
5. Battery Safety Instructions

This manual provides important safety, usage, and maintenance information. Please read it in its entirety before operating HOVER CAMERA PASSPORT. Additionally, make sure to read *Disclaimer and Safety Instructions* before flying for the first time and *Battery Safety Instructions* before handling the batteries. You can obtain the latest version of these documents from the official Hover website at www.gethover.com.

© Shenzhen Zero Zero Infinity Technology Co., Ltd. 2016. All rights reserved.

HOVER
CAMERA

Introduction

Hover Camera Passport is a safe, foldable, and portable drone able to take 13MP photos and record 4K videos. It is suitable for ages 14 years and above. HOVER CAMERA PASSPORT is less than 250 grams (8.8 ounces) and thus does not require registration with the FAA to own and operate.

Box Contents

Box Contents	**Quantity**
Hover Camera Passport	1
Product Protective Case	1
Battery	2
Easy-Carry Bag	1
Propeller	4
Screw Driver Kit (Includes: One screw driver; 12 screws: T3*6, T4*6)	1
USB 3.0 Cable	1
Charger	1
Charger Cable	1
Quick Guide	1
Warranty Policy	1
Battery Safety Instructions	1
Disclaimer Safety Instructions	1
Box Contents List	1

© Shenzhen Zero Zero Infinity Technology Co., Ltd. 2016. All rights reserved.

HOVER
CAMERA

Diagram of HOVER CAMERA PASSPORT

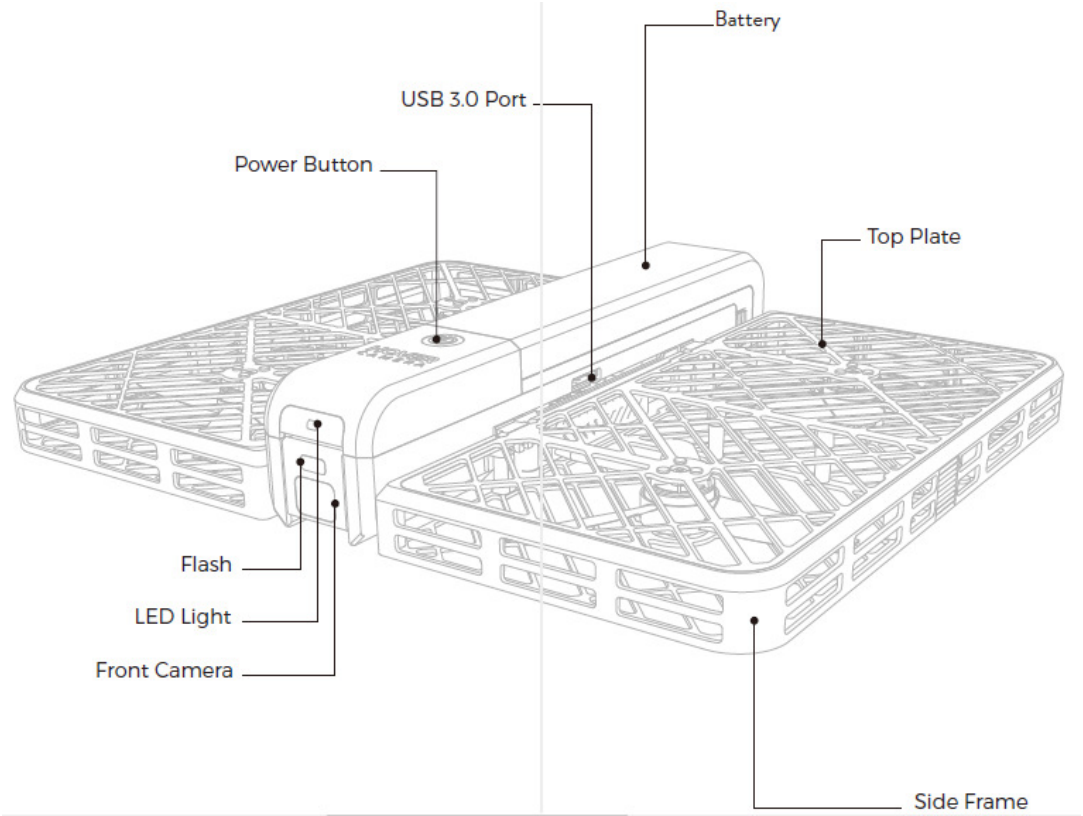

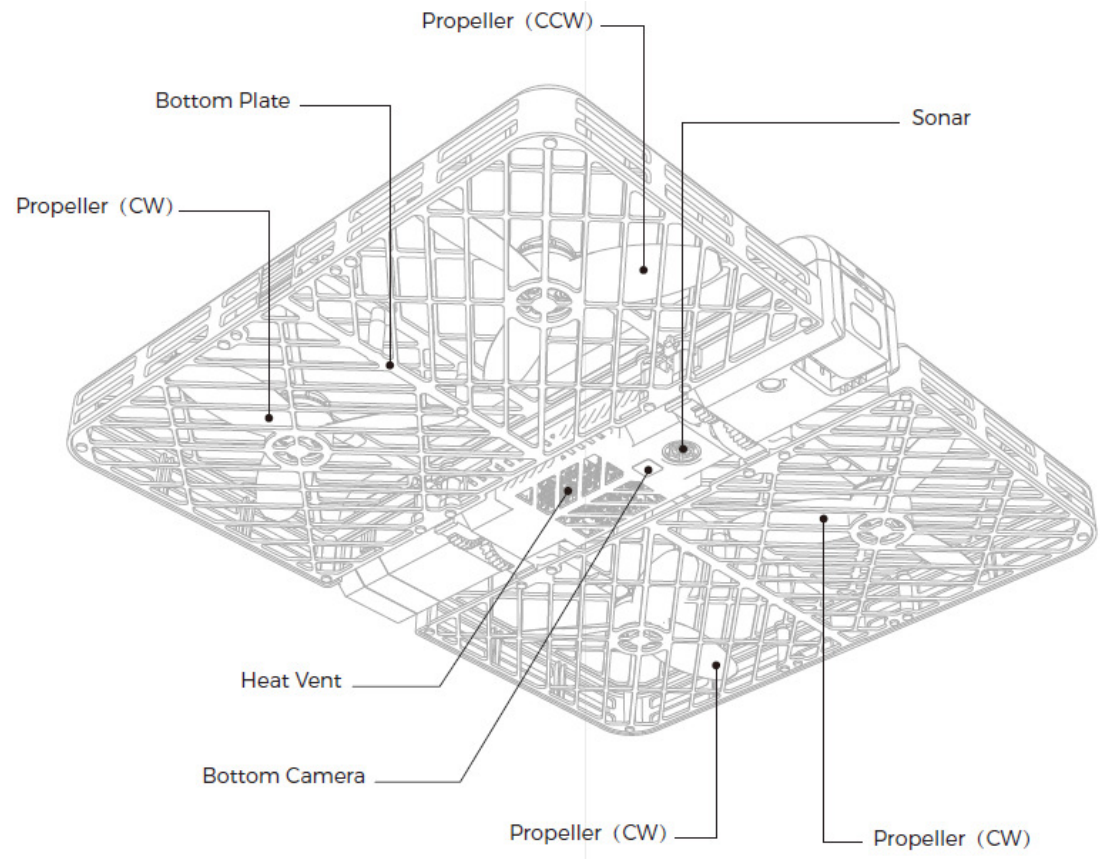

© Shenzhen Zero Zero Infinity Technology Co., Ltd. 2016. All rights reserved.

HOVER CAMERA

Before you Begin

Charging & Installing the Battery

Charging the Battery

A fully charged battery provides up to 8 minutes of flying time. To charge the batteries, plug them into the charger as shown in the following diagram:

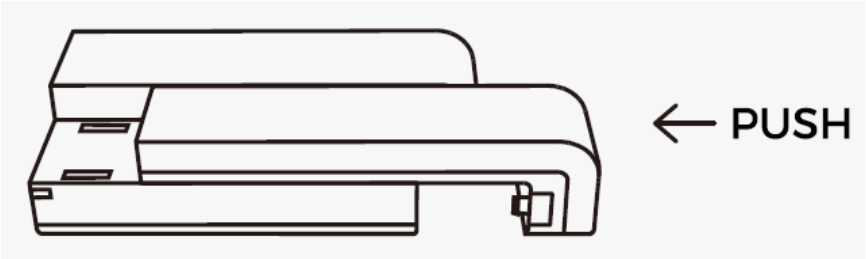

Each charger can charge two batteries simultaneously. Fully charging a battery requires approximately 50 minutes. (如圖)

The LED indicator light indicates the charge status as follows:

Solid yellow: charging

Solid green: battery is fully charged

Note:

*When a Li-ion battery is left discharged for an extended period, the battery will deactivate to prevent over-discharge damage. To reactivate the battery, charge it using the HOVER CAMERA PASSPORT battery charger. The LED indicator light on the charger will turn solid yellow during reactivation. If reactivation fails or if the battery fails to charge, the LED indicator light will blink yellow.

*When the battery temperature is too low (below 32℉) or too high (above 104℉), the charger will stop charging until the temperature is within the acceptable range. The charging process may take longer as a result. During this time, the LED indicator light on the charger will remain solid yellow.

*The capacity of Li-ion batteries deteriorates over time.

*Signals for reactivating and charging battery are the same. Just leave the battery on the charger.

© Shenzhen Zero Zero Infinity Technology Co., Ltd. 2016. All rights reserved.

HOVER
CAMERA

Installing the Battery

To install the battery, line up battery hooks with the slots on the top of the HOVER CAMERA PASSPORT and gently slide it in until it locks as shown in the following diagram:

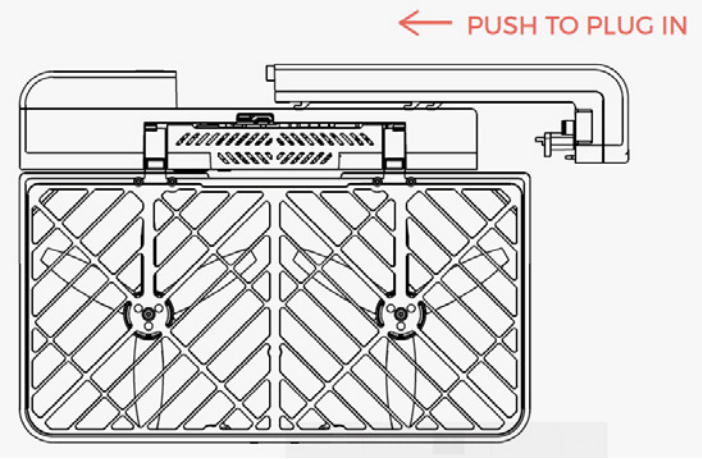

Removing the battery

To remove the battery, pinch the grips at the rear of the battery and gently pull outward as shown in the following diagram:

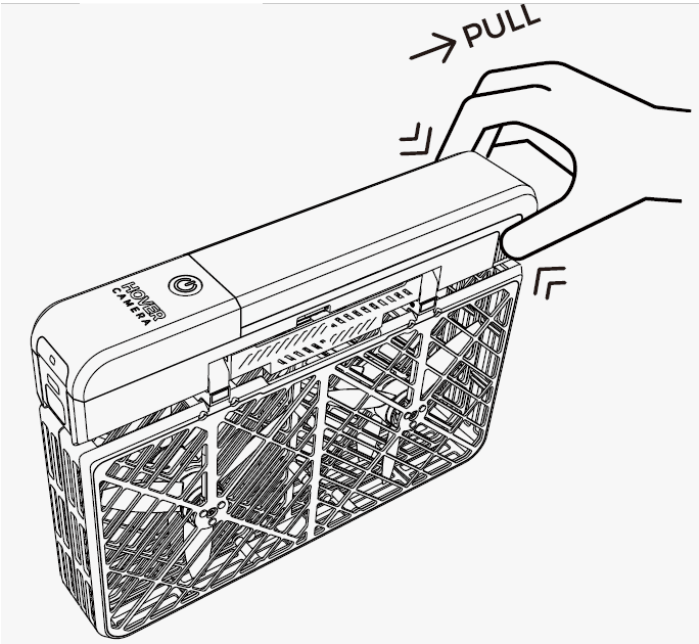

© Shenzhen Zero Zero Infinity Technology Co., Ltd. 2016. All rights reserved.

HOVER
CAMERA

Downloading the Hover App

The Hover app allows you to control HOVER CAMERA PASSPORT through your Android or iOS device. Through the app, you can take photos, record videos, and perform complex maneuvers both manually or with the intelligent flight modes, such as Auto-Follow, 360 Spin, Orbiting, and Automatic Landing. The Hover app tutorial will open the first time you launch the app to provide you with a quick introduction to each function. If you need to view the tutorial again, tap on 'Tutorial' located under 'Settings' from the Hover app. **(Pictures)**

To download the Hover app, scan the QR code below with the mobile device you wish to use to control your HOVER CAMERA PASSPORT. You can also visit our official website www.gethover.com to download the app.

iOS **Android**

The iOS version of the Hover app is compatible with iOS 8.0 or later.

Pre-Flight Check

Before each flight session, ensure that:

a. Weather conditions are appropriate for flight. Do not fly HOVER CAMERA PASSPORT in rainy, snowy, or foggy conditions or when wind speeds exceed 6 miles per hour.
b. There are no obstacles in your flight area that could disturb photographing or visual flight.
c. The use of HOVER CAMERA PASSPORT is allowed in your flight area.
d. There are no applicable Wi-Fi usage restrictions in your flight area.
e. The battery is correctly installed.
f. The HOVER CAMERA PASSPORT battery and your connected mobile device are charged.
g. The quality of the Wi-Fi connection is suitable for flight.

© Shenzhen Zero Zero Infinity Technology Co., Ltd. 2016. All rights reserved.

HOVER
CAMERA

Flying for the First Time

Environment Requirements for Flight

HOVER CAMERA PASSPORT can be operated indoors at suitable venues or outdoors when wind speeds are below 6 miles per hour. When wind speeds are 6 miles per hour or higher, you may not be able to control HOVER CAMERA PASSPORT properly. This poses a serious risk of damage to the HOVER CAMERA PASSPORT, other property, or injury to nearby persons.

To ensure high quality videos and photos, operate HOVER CAMERA PASSPORT in an environment with minimal or no wind.

HOVER CAMERA PASSPORT can be flown in temperatures between 5℃ - 35℃ (41°F - 95°F).

Only operate HOVER CAMERA PASSPORT in locations where use is legal. (Refer to your local regulator's website for more information.)

Operate HOVER CAMERA PASSPORT in a well-lit, spacious environment free of any obstacles to ensure optimal flight performance.

DO NOT fly HOVER CAMERA PASSPORT in crowded areas to avoid causing injury.
DO NOT fly HOVER CAMERA PASSPORT in areas or near buildings with no-flying signs.
DO NOT fly HOVER CAMERA PASSPORT in rain, fog, snow, lightning, hail, storm, winds over 6 miles per hour, or any other extreme weather environments.
DO NOT fly HOVER CAMERA PASSPORT in areas with strong magnetic fields.

HOVER CAMERA PASSPORT relies on an optical flow sensor and sonar to gauge its height and position. The following types of environments may negatively affect the performance of HOVER CAMERA PASSPORT:

- Extremely dark or extremely bright
- Flickering or rapidly changing light conditions

Avoid surfaces with one or more of the following characteristics:

- Solid color
- Reflective or transparent
- Moving
- Strong sound absorption
- Irregular or unclear texture
- Repetitive textures
- Inclines greater than 20°
- Snow

© Shenzhen Zero Zero Infinity Technology Co., Ltd. 2016. All rights reserved.

HOVER
CAMERA

Status lights

The following chart shows what the various light indicator status' indicate.

Indicator Light	Color and LED Status	HOVER CAMERA PASSPORT Status
Power Button	Solid White	1. Ready to fly 2. Flying
	Blinks White quickly	Self-checking when HOVER CAMERA PASSPORT is turned on
	Blinks White slowly	Firmware upgrade
LED Indicator Light	Solid Green	Connected to a USB port
	Blinks Green Twice	When HOVER CAMERA PASSPORT is turned on
	Solid Yellow	1. Fail to initialize after self-checking. 2. The environment is inappropriate for flying.
	Blinks Yellow	Low Battery
	Blinks Red once	Taking a single photo
	Blinks Red constantly	Recording a video

(Pictures may be needed here)

Powering On/Off

To power on HOVER CAMERA PASSPORT, long-press HOVER CAMERA PASSPORT's power button for 2 seconds. The front camera will tilt down and then up once to calibrate the camera position and the LED indicator light will flash green twice. HOVER CAMERA PASSPORT has a 15-second initialization process followed by a beep to indicate when the process is complete and it is in Standby mode.

To power off HOVER CAMERA PASSPORT, long-press the power button for 2 seconds while HOVER CAMERA PASSPORT is in Standby mode. The front camera will tilt down and up again followed by a beep to indicate the process is complete.

Note:
*When turning on the device, HOVER CAMERA PASSPORT will perform a self-check. The LED light will remain solid yellow if there are any errors. In this case, do not attempt to operate HOVER CAMERA PASSPORT. For troubleshooting and FAQs, please visit Hover's official website at www.GetHover.com.

Standby Mode

When HOVER CAMERA PASSPORT is in Standby mode, the power button light turns a solid white and HOVER CAMERA PASSPORT is ready for flight. Please refer to the Release & Hover section

© Shenzhen Zero Zero Infinity Technology Co., Ltd. 2016. All rights reserved.

below for flying and controlling HOVER CAMERA PASSPORT.

Connecting to HOVER CAMERA PASSPORT from Your Mobile Device

HOVER CAMERA PASSPORT connects to mobile devices directly through Wi-Fi. The connection process is as follows:

1. Power on HOVER CAMERA PASSPORT
2. Launch the Hover app from your mobile device (如圖)

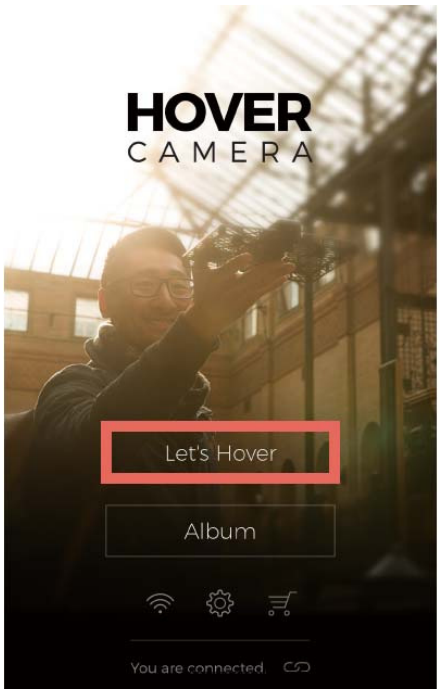

3. Tap the Wi-Fi icon near the bottom of the screen to display your device's Wi-Fi Settings page
4. Locate and tap on HOVER CAMERA PASSPORT's Wi-Fi name. The name will be in the format HoverCamera_XXXXXX where XXXXXX is a unique 6-digit number specific to your device
5. When prompted, enter the Wi-Fi password. (Default Wi-Fi password: 12345678)

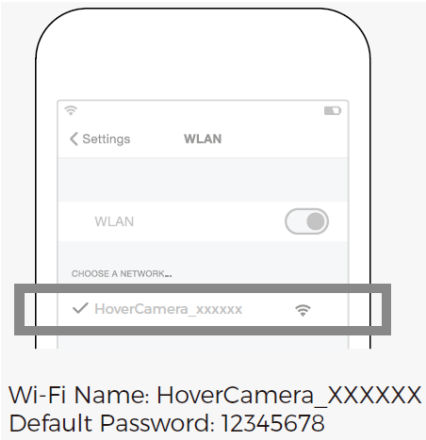

© Shenzhen Zero Zero Infinity Technology Co., Ltd. 2016. All rights reserved.

Note:
*Users can change the password and Wi-Fi name from "Settings" in the Hover app.
*Only one user can connect at a time. For another user to gain control when HOVER CAMERA PASSPORT is already being controlled, the user connected to HOVER CAMERA PASSPORT will need to disconnect first.
*HOVER CAMERA PASSPORT supports 2.4 GHz (default) and 5 GHz Wi-Fi connections. Before switching to 5 GHz, ensure your mobile device supports 5 GHz Wi-Fi connections.
The 2.4 GHz Wi-Fi band enables longer flight distance but is generally more congested than 5 GHz in urban areas, which may result in connection interference. The 5 GHz Wi-Fi band enables better connection between HOVER CAMERA PASSPORT and mobile devices at shorter distances.

Release and Hover

In Standby mode, unfold HOVER CAMERA PASSPORT and press the power button. Once the propellers start spinning, hold HOVER CAMERA PASSPORT horizontally and steady and the system will determine if HOVER CAMERA PASSPORT is ready for flight. If flight conditions are met, the propeller speed will increase to flying speed and you can release HOVER CAMERA PASSPORT. HOVER CAMERA PASSPORT will hover in place and requires no further actions to keep it airborne.

Note:
*Do not cover the optical flow and sonar sensors at the bottom of HOVER CAMERA PASSPORT when releasing HOVER CAMERA PASSPORT.
*If the LED indicator light on HOVER CAMERA PASSPORT is solid yellow, the environment is not suitable for flight or HOVER CAMERA PASSPORT is not held correctly. Ensure that you are holding HOVER CAMERA PASSPORT steady with the wings and sensors parallel to the ground or relocate to a more suitable environment if the environment is unsuitable.
*HOVER CAMERA PASSPORT must be at least 12 inches from the ground for a proper release.
*Do not release HOVER CAMERA PASSPORT when the LED indicator light is solid yellow or the aircraft may crash, drift, or experience performance issues. If the LED indicator light remains solid yellow, check the FAQ section of this manual or visit Hover's official website at www.GetHover.com for troubleshooting and further information.

© Shenzhen Zero Zero Infinity Technology Co., Ltd. 2016. All rights reserved.

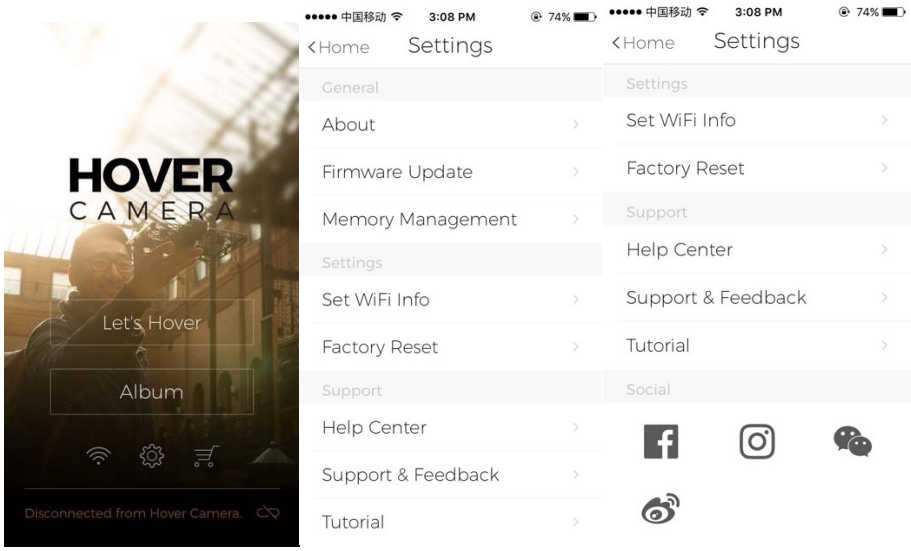

Manual Controls

Once HOVER CAMERA PASSPORT is connected to your mobile device and is in flight, tap Let's Hover from the main screen of the Hover app. In the next screen, tap the console icon on the right to select manual control mode. There are three manual control modes for HOVER CAMERA PASSPORT.

When using default settings, flight controls will make HOVER CAMERA PASSPORT fly relative to where its camera is facing. The following controls apply when the camera is facing the user. When using Mirror Mode, the flight controls are reversed.

Classic Mode

Control HOVER CAMERA PASSPORT using virtual control pads:

- Arrow buttons on the left adjust altitude
- Right control pad adjusts flying direction:
    - Up arrow makes HOVER CAMERA PASSPORT fly away from the user.
    - Down arrow makes HOVER CAMERA PASSPORT fly toward the user.
    - Left arrow makes HOVER CAMERA PASSPORT strafe to the user's left.
    - Right arrow makes HOVER CAMERA PASSPORT strafe to the user's right.
- Swipe your finger on any part of the screen to rotate HOVER CAMERA PASSPORT in the direction of the swipe.

Pictures needed here

Joystick Mode

Use virtual joysticks to control HOVER CAMERA PASSPORT.

- Left joystick controls altitude and the camera angle.
- Right joystick controls flight direction:
    - Pushing joystick up makes HOVER CAMERA PASSPORT fly away from the user.

© Shenzhen Zero Zero Infinity Technology Co., Ltd. 2016. All rights reserved.

  - Pushing joystick down makes HOVER CAMERA PASSPORT fly toward the user.
  - Pushing joystick left makes HOVER CAMERA PASSPORT strafe to the user's left.
  - Pushing joystick right makes HOVER CAMERA PASSPORT strafe to the user's right.
- Swipe your finger on any part of the screen to rotate HOVER CAMERA PASSPORT in the direction of the swipe.

Pictures needed here

Motion Mode

Use the virtual joystick on the right and arrow buttons on the left to control HOVER CAMERA PASSPORT as shown in the following figure. Tap and hold the button on the right, and tilt your connected mobile device at different angles to control the movement of HOVER CAMERA PASSPORT.

- Left arrow buttons controls altitude.
- Right joystick controls flight direction:
  - Holding the button and tilting the phone away from you makes HOVER CAMERA PASSPORT fly away from the user.
  - Holding the button and tilting the phone towards you makes HOVER CAMERA PASSPORT fly toward the user.
  - Holding the button and tilting the phone left makes HOVER CAMERA PASSPORT strafe to the user's left.
  - Holding the button and tilting the phone right makes HOVER CAMERA PASSPORT strafe to the user's right.
- Swipe your finger on any part of the screen to rotate HOVER CAMERA PASSPORT in the direction of the swipe.

Pictures needed here

Retrieving HOVER CAMERA PASSPORT from Flight

To retrieve HOVER CAMERA PASSPORT from flight, grab it as illustrated and quick-press the power button to enter Standby mode.

Note:
*Do not cover the optical flow and sonar sensors at the bottom when retrieving HOVER CAMERA PASSPORT.
*Do not insert fingers into carbon fiber case.

In urgent situations, users can retrieve HOVER CAMERA PASSPORT by tapping the “Auto Landing” button in the Hover app

© Shenzhen Zero Zero Infinity Technology Co., Ltd. 2016. All rights reserved.

HOVER
CAMERA

Low Battery Level

Battery Level	60s of flight time left	30s of flight time left
LED Indicator Light	Blinks yellow	Blinks yellow
In-App Notification	Low Battery Level	Landing Soon
Action	Users should fly HOVER CAMERA PASSPORT to a location suitable for landing.	HOVER CAMERA PASSPORT begins to land automatically.

Note:
*During automatic landing, users will not be able to control HOVER CAMERA PASSPORT.
* HOVER CAMERA PASSPORT automatically powers itself off approximately 45s after auto-landing is engaged.
*Grabbing HOVER CAMERA PASSPORT before it completes auto-landing stops the process. Users must press the power button to stop propellers from spinning and then long press the power button for 2s to power it off

© Shenzhen Zero Zero Infinity Technology Co., Ltd. 2016. All rights reserved.

HOVER CAMERA

Photos and Videos

Taking Photos

To take photos, focus the HOVER CAMERA PASSPORT camera onto a target object and tap the shutter-release button. Photos are saved to HOVER CAMERA PASSPORT and the connected mobile device.

Gimbal profile
(Diagram of the camera tilt range)

(pictures of how to control gimbal tilting up and down on mobile device)

By sliding your finger upwards or downwards on the screen of your connected mobile device, you can tilt the camera up or down, respectively.

HOVER CAMERA PASSPORT supports single-photo and burst-photo modes:

- **Single mode**
  Tap the shutter-release button to take a single 13MP photo.
- ~~**Burst mode**~~
  ~~Tap and hold the shutter-release button to take 10 8MP photos per second held.~~

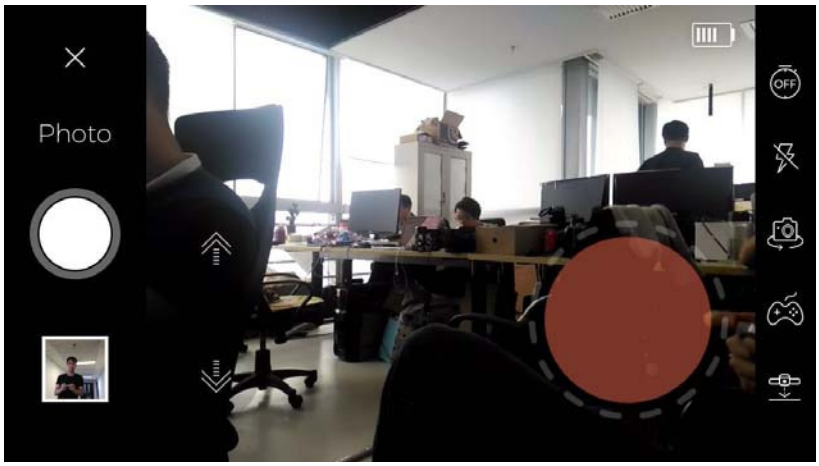

Press the icons on the right to use the following features:

1. 5-second-delayed photo
2. Toggle on/off/auto flash
3. Mirror image – reverses the image horizontally.
4. Manual control mode (refer to *Manually Controlling HOVER CAMERA PASSPORT* above)
5. Auto-land

Tap the video recording icon on the left to switch to video recording mode.

© Shenzhen Zero Zero Infinity Technology Co., Ltd. 2016. All rights reserved.

Tap the thumbnail on the bottom left of the screen to browse, share, or delete photos or upload videos from HOVER CAMERA PASSPORT to your connected mobile device.

Note:
*To switch to video recording mode, HOVER CAMERA PASSPORT must be hovering.
*In Mirror Image mode, real-time view on the connected mobile device will be mirrored horizontally but photos taken will not be mirrored. Mirror Image mode only mirrors the view and reverses the flight controls of the virtual joysticks.

Adjusting Exposure

Auto-Exposure
In photo mode, touching an area of the screen sets its brightness as the standard exposure for the entire photo. A small yellow square frame on the screen will enclose the area you specify.

Note:
* If HOVER CAMERA PASSPORT moves after selecting an exposure area, the yellow frame will move back to the center of the screen.

Pictures for comparison (before and after selecting exposure region)

Auto-Exposure Lock
In photo mode, long pressing an area of the screen for 2s locks its brightness as the standard exposure for the entire photo. The yellow frame turns green to indicate that Auto-Exposure Lock (AE-L) mode is enabled and the exposure will not change even if the scene composition changes. Once AE-L is enabled, a brightness adjustment bar will appear at the top of the screen where users can manually adjust brightness by moving the slider on the bar. Tap the screen again to disable AE-L.

Pictures for exposure region lock

© Shenzhen Zero Zero Infinity Technology Co., Ltd. 2016. All rights reserved.

HOVER
CAMERA

Recording Video

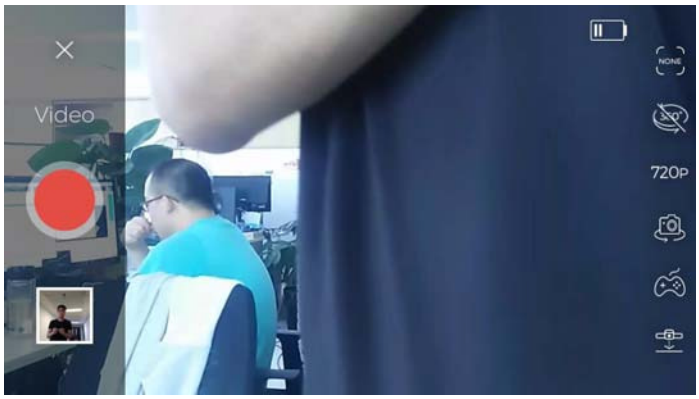

In photo mode, tap the video recording icon on the left to switch to video recording mode.

After entering Video Recording mode, tap the record button to begin recording. The LED indicator light on the HOVER CAMERA PASSPORT will flash red while recording. Tap the record button again to stop recording. (pictures)

HOVER CAMERA PASSPORT supports three video formats: 720p, 1080p, and 4K, and provides 720p preview on the connected mobile device. The 720p & 1080p formats support Electronic Image Stabilization (EIS) and wireless video uploading from HOVER CAMERA PASSPORT to the connected mobile device. You can also transfer any file from HOVER CAMERA PASSPORT to your computer via the USB cable.

Note:
*For optimal transmission, ensure that HOVER CAMERA PASSPORT has sufficient battery power and that your connected mobile device is within the HOVER CAMERA PASSPORT's operating range. If the upload is interrupted, however, neither the device nor the transferred files will be damaged.

Press the icons on the right to use the following features:

1. Auto-Follow (refer to the Auto-Follow feature introduction below)
2. 360 Spin Video (refer to the 360 Spin Video feature introduction below)
3. Video quality: choose between 720P, 1080P, and 4K video quality
4. Mirror image – reverses the image horizontally. This will also reverse the flight controls when manually flying HOVER CAMERA PASSPORT.
5. Control modes (refer to *Manually Controlling HOVER CAMERA PASSPORT* above)
6. Auto-Landing

Transferring Files from HOVER CAMERA PASSPORT to Your Computer

HOVER CAMERA PASSPORT needs to be in Standby mode to transfer files to a computer through a USB cable. Windows users do not need to install additional software to transfer files to their computers. Once HOVER CAMERA PASSPORT is connected, the auto play window will pop up

© Shenzhen Zero Zero Infinity Technology Co., Ltd. 2016. All rights reserved.

automatically. Choose ''Open Folder to view files'' and then you can choose which files you would like to save to the computer.

Mac users must install Android File Transfer to transfer files from HOVER CAMERA PASSPORT through USB. Download Android File Transfer at https://www.android.com/filetransfer/ and follow the relevant instructions to transfer files.

© Shenzhen Zero Zero Infinity Technology Co., Ltd. 2016. All rights reserved.

HOVER
CAMERA

Intelligent Flight Modes:

Warning:
Keep a safe distance from HOVER CAMERA PASSPORT when using intelligent flight modes. Ensure that there are no people, pets, fine objects, transparent objects, or any other obstacles along or in the flight path.
Pay attention to any possible obstacles along the flight path and control HOVER CAMERA PASSPORT to avoid possible crashes.

Intelligent flight modes are not recommended in the following circumstances to avoid unexpected accidents:

1. Extremely dark or bright environments.
2. During bad weather conditions, including rain, fog, snow, wind, lightning, hail, winds over 6 miles per hour, and other extreme weather conditions.
3. The tracked subject has a similar color or pattern to the surrounding environment.
4. The tracked subject changes shape drastically while moving.
5. When HOVER CAMERA PASSPORT is flying above uneven or inclined surfaces.

Users should follow local privacy laws and regulations when using auto-follow modes.
For more information about flying environment and flight safety, please refer to *Disclaimer and Safety Instructions*.

Auto-Follow

HOVER CAMERA PASSPORT can automatically follow you while recording video. You can perform mild activities such as jogging while being filmed and watch a real-time preview from your connected mobile device. Auto-Follow can be configured to track and follow faces or bodies:

- **Face-Tracking Mode**
  1. Tap the video recording icon to enter Video Recording mode.
  2. Tap the pullout arrow on the upper right of the screen to reveal the right side bar.
  3. Tap the face-tracking icon in the right sidebar to enter Face-Tracking mode. Detected faces will have a yellow frame around them.
  4. Double-tab on a detected face and HOVER CAMERA PASSPORT will lock onto the face and attempt to follow it. The yellow frame around the face will turn green.

  Faces must be 3 – 13 feet away from the HOVER CAMERA PASSPORT camera to be properly detected by the Hover app. Deactivate Face-Tracking mode by double tapping the screen. If HOVER CAMERA PASSPORT loses its target during auto-following, Face-Tracking mode is

© Shenzhen Zero Zero Infinity Technology Co., Ltd. 2016. All rights reserved.

automatically deactivated.

- **Body-Tracking Mode**
  1. Tap the video recording icon to enter Video Recording mode.
  2. Tap the pullout arrow on the upper right of the screen to reveal the right side bar.
  3. Tap the body-tracking icon in the right sidebar to enter Body-Tracking mode. Detected bodies will have a yellow frame around them.
  4. Double-tab on a detected body and HOVER CAMERA PASSPORT will onto the body and attempt to follow it. The yellow frame around the body will turn green.

  The entire body must be on screen to be properly detected by the Hover app (stand between 13 – 26 feet away from the HOVER CAMERA PASSPORT camera). Deactivate Body-Tracking mode by double tapping the screen. If HOVER CAMERA PASSPORT loses its target during auto-following, Body-Tracking mode is automatically deactivated.

Note:
*Use Auto-Follow in a bright, spacious area without obstructions and pay attention to the safety of others during use.
*If you stand beyond the optimal operating distance from the HOVER CAMERA PASSPORT camera, Auto-Follow may not activate and the Hover app will prompt you to adjust your distance.

360 Spin

In 360 Spin mode, HOVER CAMERA PASSPORT pans the camera 360 degrees clockwise around a fixed axis while recording. To activate 360 Spin mode:

1. Tap the video recording icon to enter Video Recording mode.
2. Tap the pullout arrow on the upper right of the screen to reveal the right side bar.
3. Tap the 360 spin icon in the right sidebar and HOVER CAMERA PASSPORT will start to spin while recording video.

Tapping the screen again deactivates 360 Spin mode. pictures

Orbiting

In Orbiting mode, HOVER CAMERA PASSPORT will orbit around a person from a fixed distance while recording. To activate Orbiting mode:

1. Tap the video recording icon to enter Video Recording mode.
2. Tap the pullout arrow on the upper right of the screen to reveal the right side bar.
3. Tap the orbiting icon in the right sidebar to enter Orbiting mode. Detected bodies will have a yellow frame around them.
4. Double-tab on a detected body and HOVER CAMERA PASSPORT will lock onto the body and begin orbiting around it. The yellow frame around the body will turn green.

The entire body must be on screen to be properly detected by the Hover app (stand between 13 – 26 feet away from the HOVER CAMERA PASSPORT camera). Deactivate Orbiting mode by double

© Shenzhen Zero Zero Infinity Technology Co., Ltd. 2016. All rights reserved.

tapping the screen. If HOVER CAMERA PASSPORT loses its target during orbiting, Orbiting mode is automatically deactivated.

Pictures

Other Hover App Functions

General

- **About**
  Shows the current version of HOVER CAMERA PASSPORT's firmware, terms of service, privacy policy, and end user license agreement.
- **Firmware Update**
  Checks and updates HOVER CAMERA PASSPORT's firmware.
- **Memory Management**
  Displays the available storage space remaining and allows users to manage photos and videos. Tap the “Select” button on the upper right corner to delete or transfer multiple photos and videos onto the connected mobile device.

Settings

- **Wi-Fi**
  Change HOVER CAMERA PASSPORT's Wi-Fi name and password.
- **Factory Reset**
  Reset HOVER CAMERA PASSPORT to factory settings.

Support

- **Help Center**
  Displays HOVER CAMERA PASSPORT FAQ for help with troubleshooting issues
- **Support & Feedback**
  Users can send feedback about HOVER CAMERA PASSPORT to Zero Zero Robotics.

Social Networking

Users can share content to Facebook, Instagram, WeChat, and Weibo

Shopping Cart

Opens Hover's online store where users can browse and purchase HOVER CAMERA PASSPORT and HOVER CAMERA PASSPORT accessories.

Album

In Album, users can manage photos and videos:

- Tap a video thumbnail to upload the video from HOVER CAMERA PASSPORT directly to your connected mobile device.
- Tap a video or photo thumbnail to manage that file. You can choose to delete files or share them to social networks, including Facebook, Twitter, Instagram, and YouTube.
- Tap the "Select" function in the upper right corner to manage multiple photos and videos.

© Shenzhen Zero Zero Infinity Technology Co., Ltd. 2016. All rights reserved.

HOVER
CAMERA

Note:

*HOVER CAMERA PASSPORT only supports the wireless transfer of 720P & 1080P videos to your connected mobile device. 4K videos need to be downloaded to your computer through a USB cable.

* HOVER CAMERA PASSPORT must be powered on to wirelessly transfer photos and videos to your connected mobile device.

© Shenzhen Zero Zero Infinity Technology Co., Ltd. 2016. All rights reserved.

HOVER
CAMERA

Maintenance & Care

Users can replace the carbon fiber plate on the bottom of HOVER CAMERA PASSPORT and HOVER CAMERA PASSPORT propellers. Follow the guidelines carefully to replace old or damaged parts, and only use tools and materials provided by Zero Zero Robotics.

Replacing the Bottom Carbon Fiber Plate

To remove the bottom carbon fiber plate, remove the screws as indicated in the following diagram. The two (2) screws in the middle do not need to be unscrewed. (Pictures here)

To screw on the new plate, screw on the screws based on the order shown in the following diagram. Start by tightening any screw and then tighten the screw in the opposite diagonal corner. When all four corners screws are tightened, tighten the inner four screws, and then tighten the outer two. (Pictures here)

Note:
* Carefully unscrew the screws to avoid damaging the threading

Replacing Propellers

HOVER CAMERA PASSPORT has four propellers comprised of two sets that rotate in opposite directions. Each set is diagonal from each other. Place propellers onto the corresponding rotors. Propellers do not fit on non-corresponding rotors by design. DO NOT attempt to force the propeller onto the rotor.

To replace the propellers:

1. Turn over HOVER CAMERA PASSPORT such that the carbon fiber plate is on top.
2. Remove the screws around the carbon fiber plate and remove it.
3. Unscrew the old propellers and remove them by pinching and pulling on the propeller hub (the part conjoined with the rotor).
4. Attach the new propellers by pressing down on the propeller hub onto place and screwing it in. Only CW propellers will fit onto CW rotors and only CCW propellers will fit into CCW rotors.
5. Screw the carbon fiber plate back on (refer to the above section *Replacing the Bottom Carbon Fiber Plate* for details).

Note:
* Carefully unscrew the screws to avoid damaging the threading
* Do not press on the propeller blades when removing the screws or they may be damaged.
* Handle the propellers gently when removing or placing them.
* Do not tighten the propeller screws too loosely or too tightly.
* The two (2) screws in the middle do not need to be unscrewed.

© Shenzhen Zero Zero Infinity Technology Co., Ltd. 2016. All rights reserved.

* There are two types of screws. The screws for bottom plate are longer, while the ones for propellers are shorter.

Battery Disposal

Batteries will become worn, damaged, or otherwise unusable over time. If you encounter one of the follow situations, dispose of the battery according to your local laws and regulations.

- Swollen: battery is visibly swollen, distorted, or deformed.
- Worn: no obvious physical damage, but you experience a dramatic decrease in flying time.
- Damaged: visible damage such as cracks, abrasions, or punctures to the battery.

To dispose of unwanted batteries, check local laws and regulations regarding recycling batteries. To avoid damaging your batteries, keep them away from any wet or dusty environments. While they are not in use, detach batteries from HOVER CAMERA PASSPORT and store them in an environment between 14℉ - 104℉. Check *Battery Safety Instructions* for more information.

Storage & Transportation

Store HOVER CAMERA PASSPORT in the case provided and **DO NOT** place heavy objects on top of it.

Battery storage

Detach the battery and keep it in a proper environment as detailed in the *Battery Safety Instructions* to avoid over-discharge.

Proper temperature ranges for battery storage:	
Short term (<1 month)	-10℃ - 40℃ (14℉-104℉)
Long term (>1 month)	-10℃ - 30℃ (14℉- 86℉)

Transportation

The suitable temperature range for transporting HOVER CAMERA PASSPORT is between 18℃ - 28℃ (64.4°F - 82.4°F).

For more information about Lithium Polymer batteries, please refer to *Battery Safety Instructions*.

© Shenzhen Zero Zero Infinity Technology Co., Ltd. 2016. All rights reserved.

HOVER
CAMERA

Appendix

Specifications

HOVER CAMERA PASSPORT

Weight: 236 grams (8.3 ounces)
Dimensions: 7.2*5.2*1.28 inches
Flying Speed: 15.5mph (22.7ft/s)
Flying Time: Up to 8 minutes
Operating Temperature: 41℉-95℉
Operating Environment: Indoor environment or outdoor with wind speeds under 6 mph. For better photo and video quality, use HOVER CAMERA PASSPORT in a windless, well-lit environment with a clearly textured ground. The HOVER CAMERA PASSPORT App will send out notifications to help you determine if the environment is suitable for flight.
Front Camera: 1300M Pixels
Downward Viewing Camera: 300K Pixels
Processor: Qualcomm Snapdragon 801 2.3GHz Quad-Core Processor
Storage: 32GB

Charger

Input: 11-18V/3A MAX
Output: 8.4V/2.2A MAX

Power Adapter

Input: 100-240V~50/60Hz, 1.0A
Output: 12.0V/3.0A

Battery

Volume: 1100mAh
Voltage: 7.4V
Battery type: Lithium Polymer Battery
Power: 8.14Wh
Electric Current: 2.2A MAX
Operating Temperature: 21℉-113℉

Image Transmission Requirements

Mobile Requirements: iOS8.0 or higher version and iPhone 5S or higher version
Maximum Operating Range: 164 feet

© Shenzhen Zero Zero Infinity Technology Co., Ltd. 2016. All rights reserved.

HOVER
CAMERA

Note:
* Wi-Fi signal strength varies depending on the environment, thus the operating range may change depending on your location
* If HOVER CAMERA PASSPORT loses connection with your mobile device, it will stay in place and automatically land within 30 seconds.

Content

Video Quality: 720P 30fps, 1080P 30fps, &4K 30fps
Video Preview Quality: 720P
Photo Quality: 1300M Pixels
Photo Dimensions: 4208 X 3120 pixels

Note:
* 720P & 1080P recording modes support Electronic Image Stabilization (EIS) and wireless transfer to your connected mobile device.
* 4K video can only be transferred to your computer through a USB cable.

Flight Controls

HOVER CAMERA PASSPORT Motions: ascend, descend, move forward, move backwards, strafe left, strafe right, yaw, and pitch.
Gimbal: 30°~-90°

Compliance Information

FCC Compliance Statement

This device complies with part 15 of the FCC Rules. Operation is subject to the following two conditions: (1) This device may not cause harmful interference, and (2) this device must accept any interference received, including interference that my cause undesired operation.

Shielded cables must be used with this unit to ensure compliance with the Class B FCC limits.

Note: This equipment has been tested and found to comply with the limits for a Class B digital device, pursuant to Part 15 of the FCC Rules. These limits are designed to provide reasonable protection against harmful interference in a residential installation. This equipment generates, uses and can radiate radio frequency energy and, if not installed and

© Shenzhen Zero Zero Infinity Technology Co., Ltd. 2016. All rights reserved.

used in accordance with the instructions, may cause harmful interference to radio communications. However, there is no guarantee that interference will not occur in a particular installation. If this equipment does cause harmful interference to radio or television reception, which can be determined by turning the equipment off and on, the user is encouraged to try to correct the interference by one or more of the following measures:

Reorient or relocate the receiving antenna.

Increase the separation between the equipment and receiver.

Connect the equipment into an outlet on a circuit different from that to which the receiver is connected.

Consult the dealer or an experienced radio/television technician for help.

FCC Radiation Exposure Statement:

This transmitter must not be co-location or operating in conjunction with any other antenna or transmitter.

This equipment complies with FCC RF radiation exposure limits set forth for an uncontrolled environment.

This equipment should be installed and operated with a minimum distance of 7.9 inches between the radiator and your body. Any Changes or modifications not expressly approved by the party responsible for compliance could void the user's authority to operate the equipment.

IC RSS Warning:

This device complies with Industry Canada license-exempt RSS standard (s). Operation is subject to the following two conditions: (1) this device may not cause interference, and (2) this device must accept any interference, including interference that may cause undesired operation of the device.

IC Radiation Exposure Statement:

This equipment complies with IC RF radiation exposure limits set forth for an uncontrolled environment.

© Shenzhen Zero Zero Infinity Technology Co., Ltd. 2016. All rights reserved.

This transmitter must not be co-located or operating in conjunction with any other antenna or transmitter.

This equipment should be installed and operated with minimum distance 7.9 inches between the radiator & your body. Any Changes or modifications not expressly approved by the party responsible for compliance could void the user's authority to operate the equipment.

Canadian IC Warning

This device complies with Industry Canada license-exempt RSS standard(s). Operation is subject to the following two conditions: (1) this device may not cause interference, and (2) this device must accept any interference, including interference that may cause undesired operation of the device. Le présent appareil est conforme aux CNR d'Industrie Canada applicables aux appareils radio exempts de licence. L'exploitation est autorisée aux deux conditions suivantes :(1) l'appareil ne doit pas produire de brouillage, et (2) l'utilisateur de l'appareil doit accepter tout brouillage radioélectrique subi, même si le brouillage est susceptible d'en compromettre le fonctionnement. The device is compliance with RF eld strength limits, users can obtain Canadian information on RF exposure and compliance. Le présent appareil est conforme de ce matériel aux conformités ou aux limites d'intensité de champ RF, les utilisateurs peuvent sur l'exposition aux radiofréquences et la conformité and compliance d'acquérir les informations correspondante. This Class B digital apparatus complies with Canadian ICES-003.Cet appareil numérique de la classe B est conforme à la norme NMB-003 du Canada.

© Shenzhen Zero Zero Infinity Technology Co., Ltd. 2016. All rights reserved.