Hand-held Gimbal V5

USER'S MANUAL

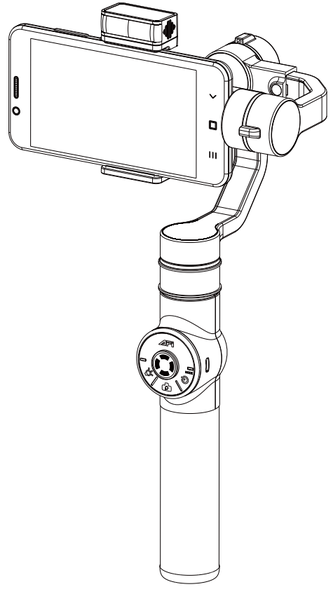

Thank you for choosing AFI, Please read this manual sheet before using.

Reminder: Please turn off the phone vibrate of the notification for SMS and ringing while using the stabilizer, otherwise it will influence the effect of the video shooting, and may cause the stabilizer to start automatic protection mode.

AFI reserves the right to change product design and specifications, the real object should be considered as final. If youhave any questions, please contact our customer enquiry hotline.

Packing List

Please check carefully if any of the following items is packaged in the products before using. In case any item is missing,please contact AFI or your agent.

Hand-held Gimbal V5 × 1
USB Cable × 1
Manual × 1
Certificate × 1
Warranty Card × 1

Stabilizer Instructions

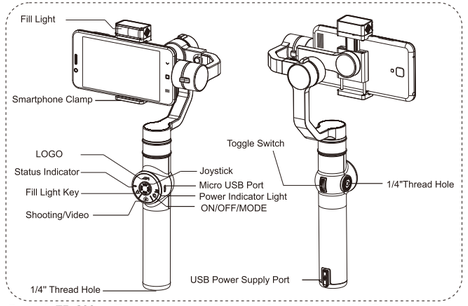

Payload: 75~200g Roll Arm Adjustment Range:0~15mm Phone Holder Range:46~90mm

Battery and Charging

To charge, please plug the Micro USB cable into the Micro USB port by the side of stabilizer handle.

Precautions of Using

1. Make sure the battery power is sufficient before using it for each time.
2. The battery will be in low power mode when the voltage is too low. After charging,the battery can work normal.
3. Built-in battery,soaking prohibited . Otherwise it may cause battery overheating, burning or function failure and shortened lifespan.

Installation of Smartphone

Pull the phone holder, slide the smart phone into the phone holder, against the pitching motor. The phone holder's adjustable width range:46~90mm.

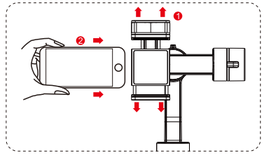

Attention: Please install the smart phone first before turning on the gimbal

Smart Phone Gravity Balance Adjustment

If the gravity center fails to stay in level, adjust the gravity center by sliding around the Roll arm until it regain its level state,to ensure the stabilizer in normal operation.

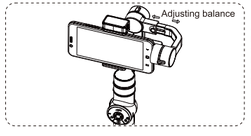

Attention: Horizontal gravity balance ensures better power saving; the stabilizer may still operate when the gravity center is not properly balanced, however, the electric energy of the motor will be excessively consumed, meanwhile, the torsion output also decreases. Gravity center adjustable range:0~15mm

Horizontal-Vertical Shooting

When the handle swings to the left or right to closed to the level and hold for a while, the gimbal will automatically switch to the vertical shooting mode.

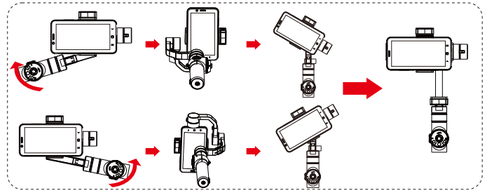

Extension Stick Instruction

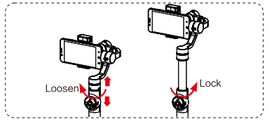

Hold the handle as the left pic shown above, Rotate the handle to the left, loosen and pull out the extension stick, then rotate the handle to the right to tighten the extension stick.

Button Function Instructions

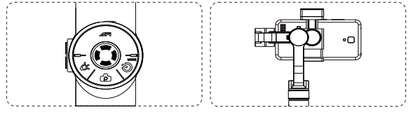

Power on/off & Mode
Mode Switch function after turning on the gimbal.
Single Click: Switch between Locking mode and pan-following mode (Default is pan-following mode after power on).
Double Click: Full following mode (At the moment,single click to switch to last operating mode).
Long press: power on/off.
Mode Instructions
Pan-Following Mode: Pitch axis and roll axis locked, panning following. up/down joystick can change pitch angle.
Full Following Mode: Roll axis locked, pitch and panning following.
Locking Mode: Roll/pitch/panning all locked; Up/down joystick can change pitch angle, left/right joystick can change pan angle .

Shooting Button: Single click for photography, double clicks for video

Fill light Control Button (Fill Light default off while the Gimbal power on)
Single tap: Turn on the Fill light at 1 brightness grade ; after that,each click the brightness circulation switch between 1/2/3/off grade .

Focus Toggle Switch
Wheel roll up: Zoom in
Wheel roll down: Zoom out

Fill Light

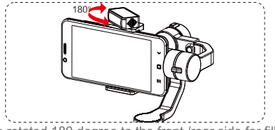

The Fill Light can be rotated 180 degree to the front /rear side for filling light inward or outward.

LED indicator light

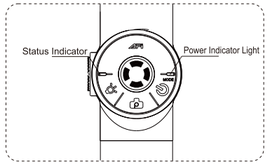

Status Indicator

The current mode of the stabilizer can be identified by the status indicator light.
Single Blinking(default): Pan Following Mode.
Double Blinking: Full Following mode.
Triple Blinking: Locking mode.
Charging / Power Indicator
Uncharged : Power indication,red light or blue light always being on is normal working,red light slow flashing is low voltage reminder, red light quick flashing is low voltage warming.
Charging: Red light blinking is charging, red light being on is charging finished reminder .
Bluetooth: The indicator light is blue when bluetooth is connected, the indicator is red when bluetooth is unconnected.

USB Port

There are two USB interfaces on the gimbal.
Micro USB Port: Can charge the stabilizer.
USB Power Supplying Port: Output 5v to 2A current.

Joystick Operation

Pan-Following Mode: Control the mobile phone up/down.
Locking Mode: Control the mobile phone up/down and left/right .

Gimbal Calibration

If you use the Gimbal for the first time or it's under any of following situations , please calibrate :
1.Slight deviation is found at the horizontal angle after the Gimbal power on.
2.Too large temperature difference between operation environments.
3.A small angle adjustment is found when the Gimbal is in level position while the stabilizer stays still.

Calibration Operation Steps
(1).First, keep the joystick downward and then power on, the green light is always on and the red light is slow flashing, indicating that the gimbal is in the gyroscope calibration mode.
(2).Put the gimbal still on a horizontal table surface and single click the shooting button.
(3). The indicator light turns green, the red light is quick flashing then keep the gimbal static for about 10s
(4). If the calibration is successful,the indicator will turn green and the red light is slow flashing; If the calibration fails, if the calibration is failed,the green light is off, the red light is quick flashing.
(5). After the calibration is completed, turn off and restart the gimbal.
(6).If the above operation is not successful, please contact AFI for support.

APP USE
1.Android phone: "AFI Play" can be downloaded through Google play or Tencent Application Treasure.
iOS phone: "AFI Play" can be downloaded through Apple store "AFI Play"
"AFI Play" can be also downloaded from AFI official website.
2. Turn on the gimbal after installing the phone.
3.start the "AFI Play" in the phone and slide screen to select the phone gimbal or Camera gimbal, tap the "connect device" to search the gimbal for pairing , Please turn on your phone Bluetooth fuction in advance.

Product Specification

	MIN	Standard	MAX	Remarks
Operation Voltage	6.8V	7.4V	8.4V	
Operation Current	120mA		2100mA	
OperationTemperature	−10°		45°	
Operation Time		12h		Gimbal properly Balanced
GIMBAL Weight		480g		
Tilt Axis Range		320		
Roll Axis Range		320		
Pan Axis Motion Range		320		
Compatible Device		under 6.0inches phone, GoPro3/4/5		
Controllable Tilt Angle Range	−160		+160	
Controllable Roll Angle Range	−30		+30	
Controllable Pan Angle Range		320		
Payload	75g		200g	
Charging Time		2.5H		
Charging Input Voltage		5V		
Charging Input Current		2000mA		
Power Output Voltage		5V		
Power Output Current		2000mA		

Warnings and Disclaimers :

1. AFI hand-held Gimbal is an excellent video stabilizer, light weight and portable;
2. Prohibit any illegal acts of any user. Users will be responsible for all of behavior to purchase and use the products;
3. For this product, AFI does not assume the risks and liabilities of the end user for all debugging and use of this product; (Including the losses of direct, indirect or third party)
4. AFI will not offer any service for non-normal channels obtained products or unknown usage products;
5. AFI reserves all the rights of interpretation.

AFI Official Website

IOS AFI APP

Google play AFI APP

Zhongshan Kingjoy Photographic Equipment Co;Ltd
Add:No.108 Zhenxiang Street,Yonger Village, Tanzhou Town, Zhongshan City, Guangdong Province
Tel:+86 760 86283558
Fax:+86 760 86283258
E-mail:afi-gimbal@cnkingjoy.com
Http://www.afi-gimbal.com

FCC Caution:

This device complies with part 15 of the FCC Rules. Operation is subject to the following two conditions: (1) This device may not cause harmful interference, and (2) this device must accept any interference received, including interference that may cause undesired operation.

Any Changes or modifications not expressly approved by the party responsible for compliance could void the user's authority to operate the equipment.

Note: This equipment has been tested and found to comply with the limits for a Class B digital device, pursuant to part 15 of the FCC Rules. These limits are designed to provide reasonable protection against harmful interference in a residential installation. This equipment generates uses and can radiate radio frequency energy and, if not installed and used in accordance with the instructions, may cause harmful interference to radio communications. However, there is no guarantee that interference will not occur in a particular installation. If this equipment does cause harmful interference to radio or television reception, which can be determined by turning the equipment off and on, the user is encouraged to try to correct the interference by one or more of the following measures:

-Reorient or relocate the receiving antenna.

-Increase the separation between the equipment and receiver.

-Connect the equipment into an outlet on a circuit different from that to which the receiver is connected.

-Consult the dealer or an experienced radio/TV technician for help.

The device has been evaluated to meet general RF exposure requirement. The device can be used in portable exposure condition without restriction.