Homtime 时

C12 Pro Docking Station Speaker with Alarm Clock and FM Radio

Lightning Connector

Bluetooth

Made for iPod iPhone

IMPORTANT:

For optimal use of this product, please read this manual carefully and keep it handy for future reference.

Table of contents

1. Product Features ····· 1
2. What's included ····· 1
3. Specification ····· 2
4. Diagram of controls ····· 3
5. LCD Screen ····· 5
6. Setting and operation ····· 6
7. Playing music ····· 10
8. Hands-free Mode ····· 15
9. FM radio ····· 16
10. USB charging ····· 16
11. Backlight ····· 16

1. Product Features

- Lightning connector for iPhone/iPod
- Plays music straight from your SD card
- Built-in FM radio
- Plays music wirelessly via Bluetooth
- Hands-free calling via Bluetooth
- Dual USB ports allow simultaneous charging of two devices
- Large LCD screen with adjustable brightness
- Preprogrammed melodic alarm with adjustable volume
- Optional alarm sources (FM radio, SD card, preprogrammed melodic alarms)
- Snooze function
- Built-in thermometer (°C or °F)
- 3.5mm AUX-in jack
- Anti-theft clasp

2. What's Included

Please check the contents of the box after purchase. You should find 1 of each:

• C12pro main unit	1 PC	• Power adaptor	1 PC
• User manual	1 PC	• Warranty card	1 PC
• Aux-in cable	1 PC		

3. Technology Specification

- Bluetooth Version: V 4.0 classic
- Bluetooth Range: 10 M
- Output Power: RMS 3W+3W
- Speaker: 4Ω 3W 1.5in
- Frequency Response: 70Hz-20KHz
- FM Frequency Range: 87.5-108MHz
- Standby power consumption: ＜0.8W
- Maxium power consumption: 15W
- S/N Ratio: >60dB
- Distortion: <1%
- Power Adaptor: AC100 - 240V 50/60Hz DC 5V 3A
- Product Net Weight: 564g
- Prod uct Dimension: 128x130.5x71.6mm

4. Diagram of the C12pro Controls

① Large Rotary Knob

② Supporting Bracket

③ Alarm Set Button

④ Mode Selector and On/Off Knob

⑤ Small Knob

- In music mode, press to play/pause. To skip forwards, turn clockwise. Turn anticlockwise to skip backwards. To fast-forward, turn and hold clockwise. Turn and hold anticlockwise to rewind.
- In Radio mode, press to scan from the current station to the next. To quickly scan through stations, turn and hold.

⑥ USB Charging Port ①

⑦ USB Charging Port ②

⑧ Lightning Connector

⑨ DC Adaptor Socket

⑩ AUX-in Jack

⑪ Celsius/Fahrenheit Selector Switch

⑫ Temperature Sensor

⑬ 24hr/12hr Mode Selector Switch

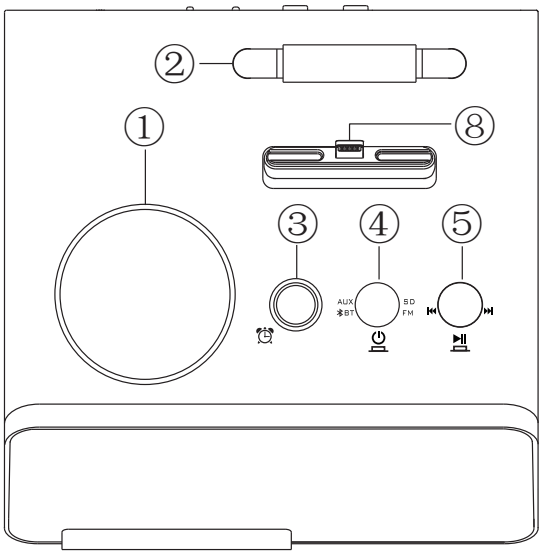

⑭ Time Set Switch

⑮ Alarm Source Selector Switch

⑯ Alarm Volume Control

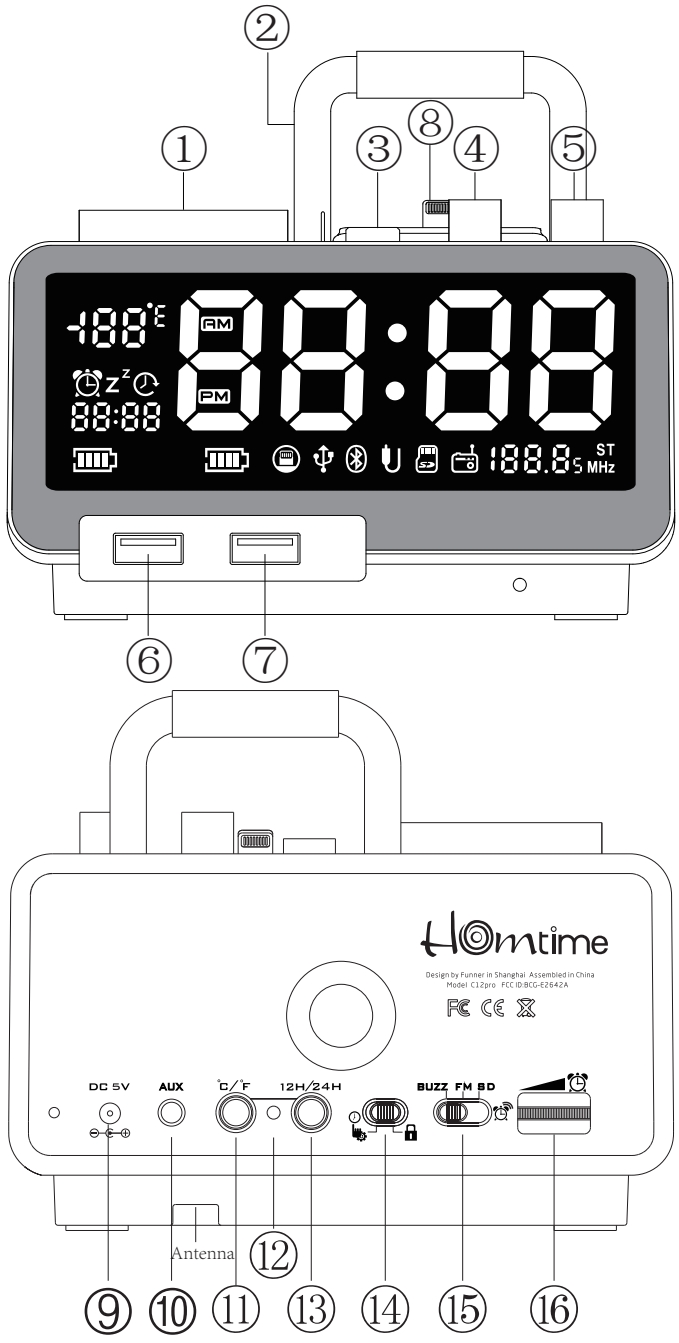

5. LCD Display

⑰ Snooze function indicator

⑱ Alarm clock setting indicator

⑲ Alarm clock time set (24-hour mode only) indicator

⑳ Celsius/Fahrenheit indicator

㉑ Temperature reading

㉒ AM indicator in 12-hour mode

㉓ PM indicator in 12-hour mode

㉔ Digital clock-Hour

㉕ Digital clock-Minute

㉖ USB port 1 charging indicator

㉗ Setting up clock time

㉘ USB port 1 charging indicator

㉙ iPhone mode indicator

㉚ USB mode indicator

㉛ Bluetooth mode indicator

㉜ AUX-in mode indicator

㉝ SD card mode indicator

㉞ FM radio mode indicator

㉟ FM radio frequency indicator

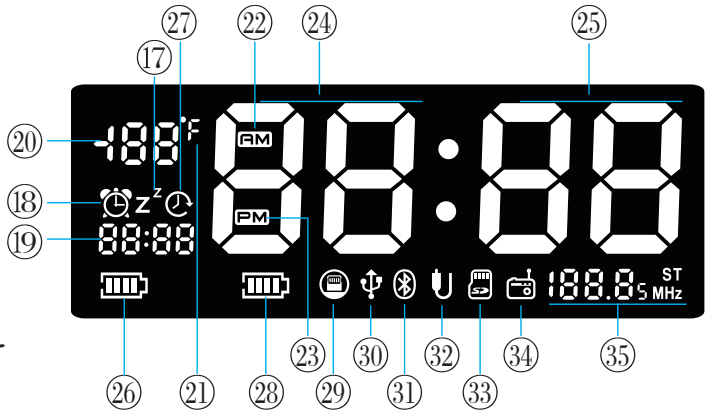

6. Setting and Operation

6.1Backup Battary

Install the botton battery in the package into the compartment on the bottom of C12pro, as shown in the figure

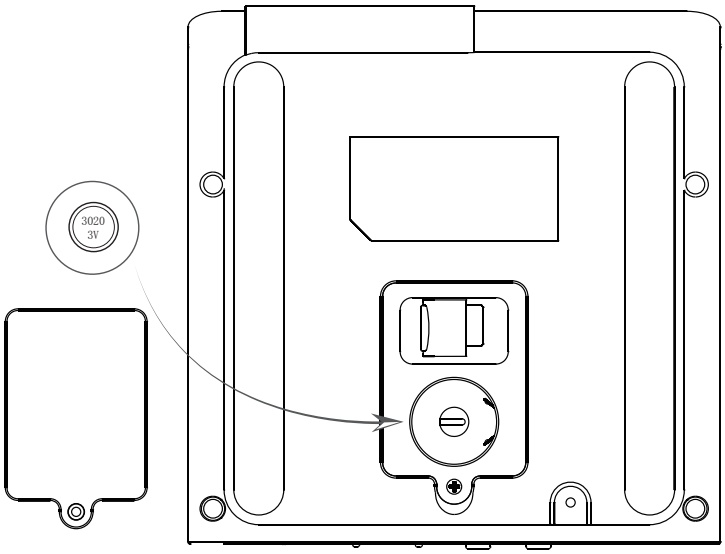

6.2 Power Plug-in

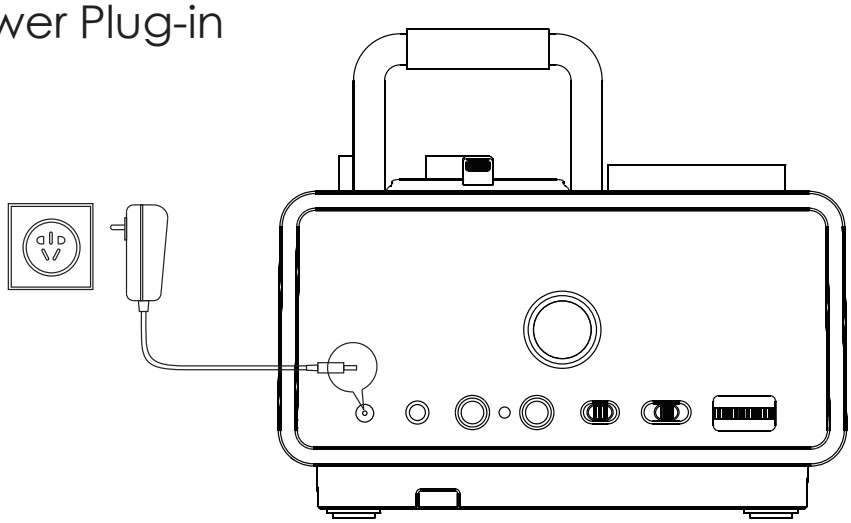

6.3 Turn On/Off:

- Once plugged into a wall socket, the C12pro is on standby mode. Press ④ to turn the unit on
- Press and hold ④ to turn the C12 pro off. Once in this mode, the LCD will continue to show the time and temperature

6.4 Time Setting

- Slide the time set switch to time set mode. This will cause the time to flash on the LCD.
  Then rotate ① to set the time. Slide the time setting switch to lock mode to lock-in the desired time
- Dock your iPhone onto ⑧ when the unit is on. Time will be sync with your iPhone.
- Press ⑬ to switch between 12h/24h time settings

6.5 Alarm Setting

- Press ③ to turn the alarm on. The alarm clock icon will light up and the digital clock face will start flashing. Rotate ① to set the desired alarm time. This mode will automatically be exited after 10 seconds of inactivity. When the alarm is set, the alarm is automatically programmed to repeat daily. To ensure that the alarm only activates once, press and hold ① until the warning tone sounds. Press ③ to set or unset the alarm.

6.6 Alarm Types

- Choose from buzzer, FM radio or SD card alarm types by sliding

to the desired setting

6.7 Snooze

- When the alarm sounds, press ① . This will activate snooze mode.
- The alarm will repeat every 9 minutes for the 30 minutes proceeding the original alarm