Test Laboratory: Huatongwei International Inspection Co., Ltd.,SAR Lab Date: 5/8/2019

GSM 850-Head

Communication System: UID 0, Generic GPRS(TDMA, GMSK, TN 0-1-2) (0); Frequency: 824.2 MHz;Duty Cycle: 1:2.66993
Medium parameters used: f = 825 MHz; σ = 0.93 S/m; ε_r = 43.974; ρ = 1000 kg/m^3
Phantom section: Flat Section
Ambient Temperature:21.8℃;Liquid Temperature:21.6℃;

DASY Configuration:

- Probe: EX3DV4 - SN7494; ConvF(10.41, 10.41, 10.41) @ 824.2 MHz; Calibrated: 3/25/2019
- Sensor-Surface: 1.4mm (Mechanical Surface Detection)
- Electronics: DAE4 Sn1549; Calibrated: 3/19/2019
- Phantom: Twin-SAM V8.0 ; Type: QD 000 P41 AA; Serial: 1974
- DASY52 52.10.2(1495); SEMCAD X 14.6.12(7450)

Front/CH 128/Area Scan (31x41x1): Interpolated grid: dx=1.500 mm, dy=1.500 mm
Maximum value of SAR (interpolated) = 0.161 W/kg

Front/CH 128/Zoom Scan (5x5x7)/Cube 0: Measurement grid: dx=8mm, dy=8mm, dz=5mm
Reference Value = 11.87 V/m; Power Drift = -0.13 dB
Peak SAR (extrapolated) = 0.201 W/kg
SAR(1 g) = 0.105 W/kg; SAR(10 g) = 0.063 W/kg
Maximum value of SAR (measured) = 0.160 W/kg

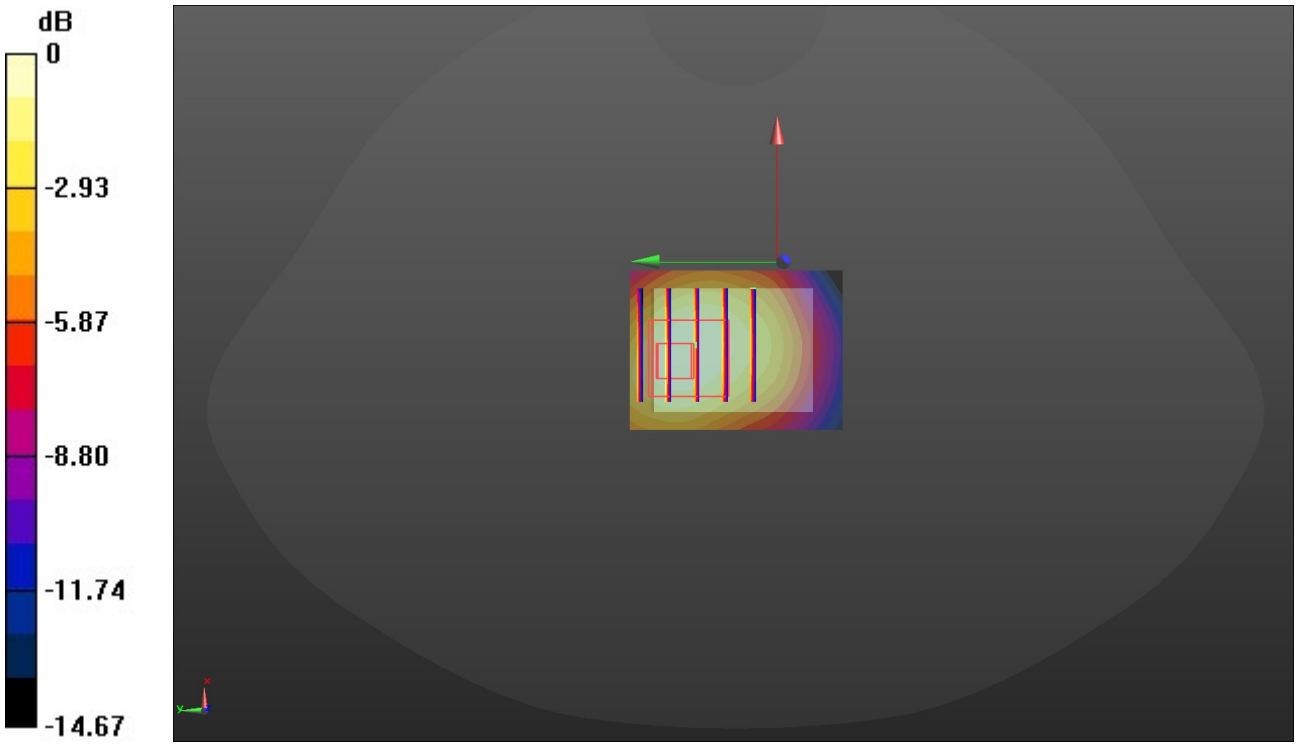

0 dB = 0.160 W/kg = -7.96 dBW/kg

Test Laboratory: Huatongwei International Inspection Co., Ltd.,SAR Lab Date: 5/13/2019

GSM 1900-Head

Communication System: UID 0, Generic GPRS(TDMA, GMSK, TN 0-1-2-3) (0); Frequency: 1850.2 MHz;Duty Cycle: 1:2.00447
Medium parameters used (interpolated): f = 1850.2 MHz; σ = 1.437 S/m; ε_r = 41.77; ρ = 1000 kg/m^3
Phantom section: Flat Section
Ambient Temperature:22.1°C;Liquid Temperature:21.8°C;

DASY Configuration:

- Probe: EX3DV4 - SN7494; ConvF(8.57, 8.57, 8.57) @ 1850.2 MHz; Calibrated: 3/25/2019
- Sensor-Surface: 1.4mm (Mechanical Surface Detection)
- Electronics: DAE4 Sn1549; Calibrated: 3/19/2019
- Phantom: Twin-SAM V8.0 ; Type: QD 000 P41 AA; Serial: 1974
- DASY52 52.10.2(1495); SEMCAD X 14.6.12(7450)

Front/CH 512/Area Scan (31x41x1): Interpolated grid: dx=1.500 mm, dy=1.500 mm

Info: Interpolated medium parameters used for SAR evaluation.
Maximum value of SAR (interpolated) = 1.06 W/kg

Front/CH 512/Zoom Scan (5x5x7)/Cube 0: Measurement grid: dx=8mm, dy=8mm, dz=5mm
Reference Value = 24.99 V/m; Power Drift = -0.19 dB
Peak SAR (extrapolated) = 1.12 W/kg
SAR(1 g) = 0.634 W/kg; SAR(10 g) = 0.361 W/kg

Info: Interpolated medium parameters used for SAR evaluation.
Maximum value of SAR (measured) = 0.932 W/kg

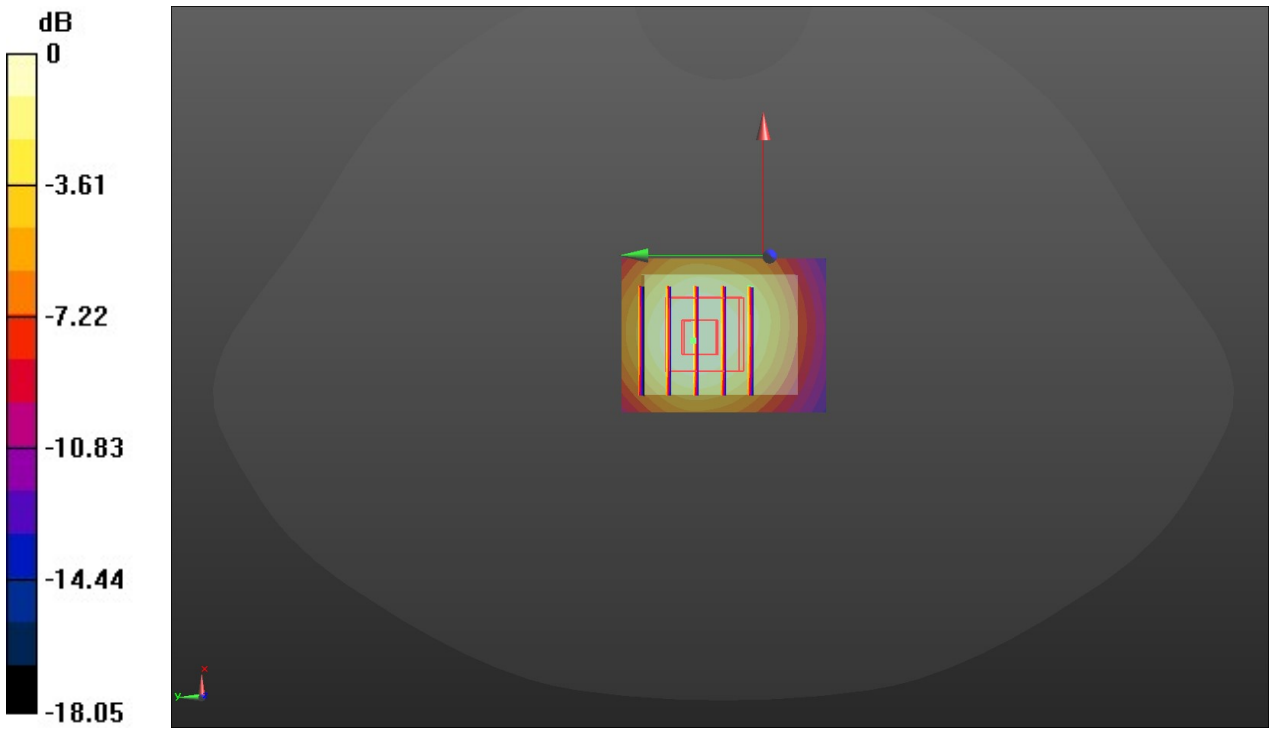

0 dB = 0.932 W/kg = -0.31 dBW/kg

Test Laboratory: Huatongwei International Inspection Co., Ltd.,SAR Lab Date: 5/13/2019

WCDMA Band II-Head

Communication System: UID 0, Generic UMTS (0); Frequency: 1907.6 MHz;Duty Cycle: 1:1
Medium parameters used (interpolated): f = 1907.6 MHz; σ = 1.468 S/m; ε_r = 41.655; ρ = 1000 kg/m^3
Phantom section: Flat Section
Ambient Temperature:22.0°C;Liquid Temperature:21.8°C;

DASY Configuration:

- Probe: EX3DV4 - SN7494; ConvF(8.57, 8.57, 8.57) @ 1907.6 MHz; Calibrated: 3/25/2019
- Sensor-Surface: 1.4mm (Mechanical Surface Detection)
- Electronics: DAE4 Sn1549; Calibrated: 3/19/2019
- Phantom: Twin-SAM V8.0 ; Type: QD 000 P41 AA; Serial: 1974
- DASY52 52.10.2(1495); SEMCAD X 14.6.12(7450)

Front/CH 9538/Area Scan (31x41x1): Interpolated grid: dx=1.500 mm, dy=1.500 mm

Info: Interpolated medium parameters used for SAR evaluation.
Maximum value of SAR (interpolated) = 1.85 W/kg

Front/CH 9538/Zoom Scan (5x5x7)/Cube 0: Measurement grid: dx=8mm, dy=8mm, dz=5mm
Reference Value = 32.60 V/m; Power Drift = 0.09 dB
Peak SAR (extrapolated) = 2.06 W/kg
SAR(1 g) = 1.14 W/kg; SAR(10 g) = 0.649 W/kg

Info: Interpolated medium parameters used for SAR evaluation.
Maximum value of SAR (measured) = 1.71 W/kg

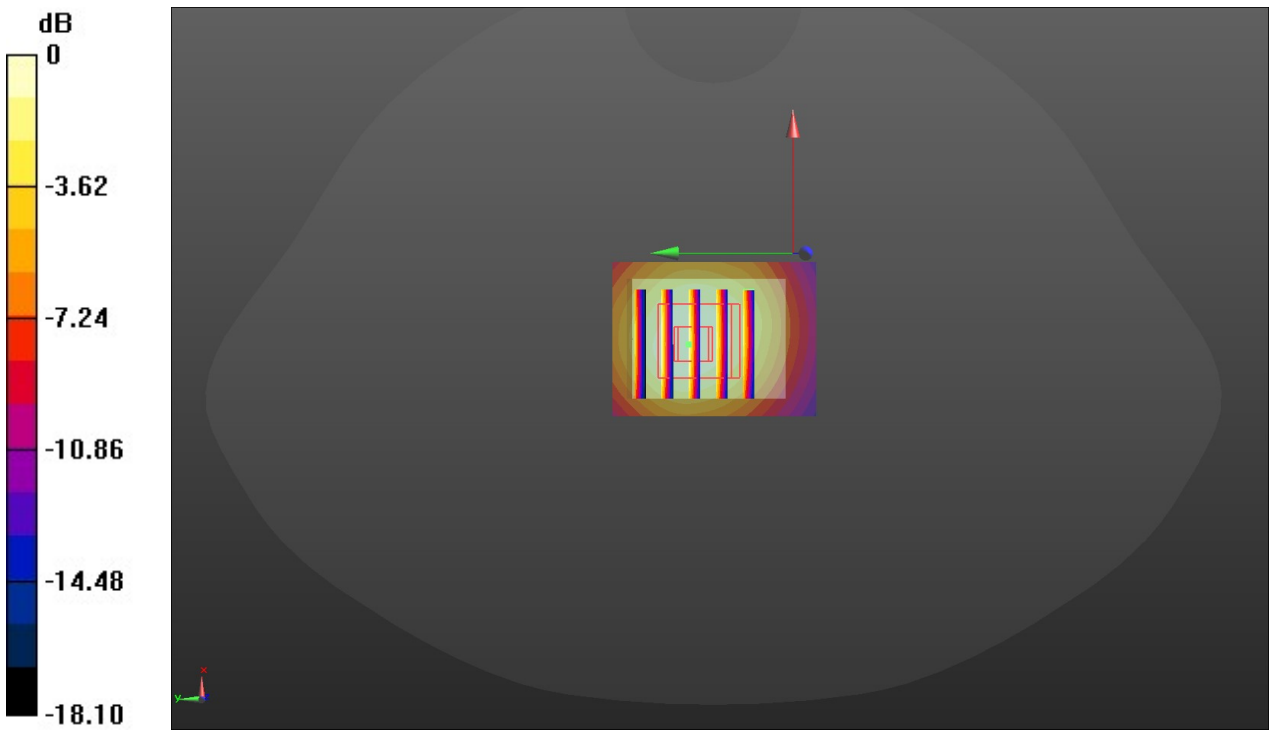

0 dB = 1.71 W/kg = 2.33 dBW/kg

Test Laboratory: Huatongwei International Inspection Co., Ltd.,SAR Lab Date: 5/8/2019

WCDMA Band V-Head

Communication System: UID 0, Generic UMTS (0); Frequency: 836.6 MHz;Duty Cycle: 1:1
Medium parameters used (interpolated): f = 836.6 MHz; σ = 0.933 S/m; ε_r = 43.899; ρ = 1000 kg/m^3
Phantom section: Flat Section
Ambient Temperature:21.9°C;Liquid Temperature:21.7°C;

DASY Configuration:

- Probe: EX3DV4 - SN7494; ConvF(10.41, 10.41, 10.41) @ 836.6 MHz; Calibrated: 3/25/2019
- Sensor-Surface: 1.4mm (Mechanical Surface Detection)
- Electronics: DAE4 Sn1549; Calibrated: 3/19/2019
- Phantom: Twin-SAM V8.0 ; Type: QD 000 P41 AA; Serial: 1974
- DASY52 52.10.2(1495); SEMCAD X 14.6.12(7450)

Front/CH 4183/Area Scan (31x41x1): Interpolated grid: dx=1.500 mm, dy=1.500 mm

Info: Interpolated medium parameters used for SAR evaluation.
Maximum value of SAR (interpolated) = 0.167 W/kg

Front/CH 4183/Zoom Scan (5x5x7)/Cube 0: Measurement grid: dx=8mm, dy=8mm, dz=5mm
Reference Value = 11.12 V/m; Power Drift = 0.17 dB
Peak SAR (extrapolated) = 0.226 W/kg
SAR(1 g) = 0.120 W/kg; SAR(10 g) = 0.072 W/kg

Info: Interpolated medium parameters used for SAR evaluation.
Maximum value of SAR (measured) = 0.179 W/kg

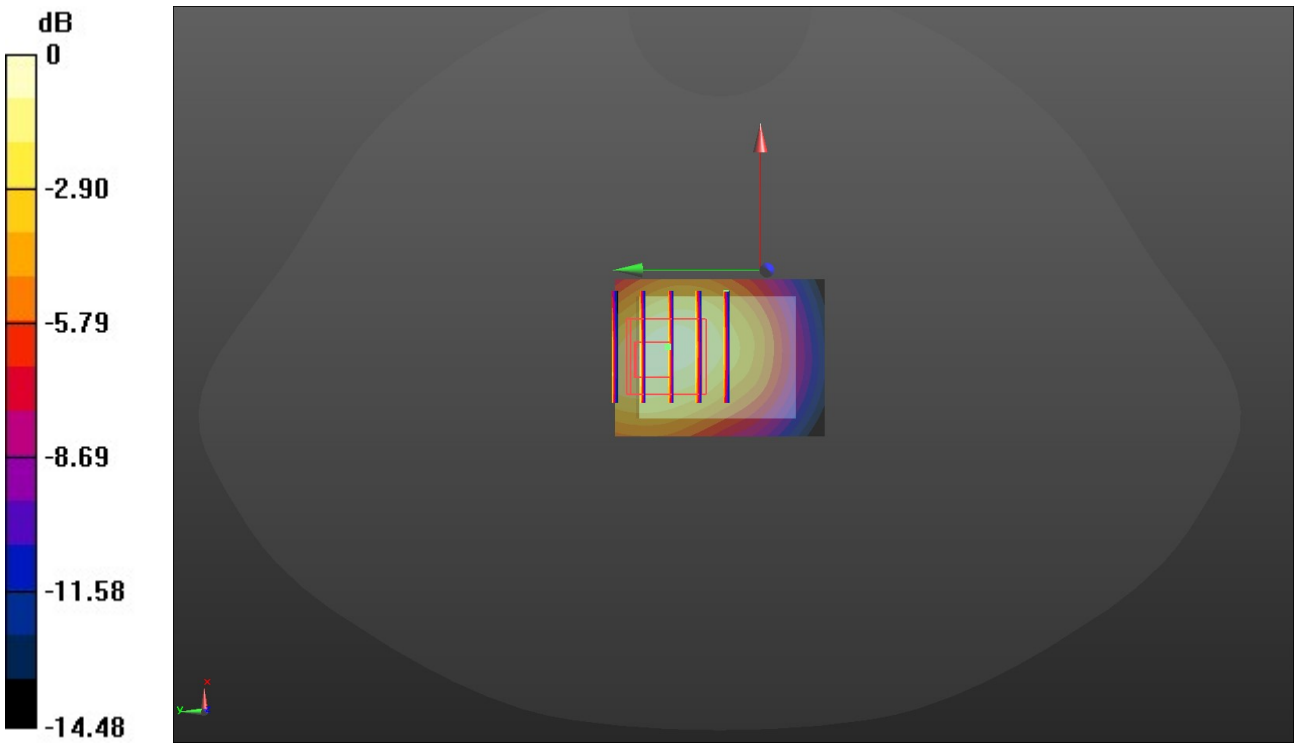

0 dB = 0.179 W/kg = -7.47 dBW/kg

Test Laboratory: Huatongwei International Inspection Co., Ltd.,SAR Lab Date: 5/13/2019

LTE Band 2-Head

Communication System: UID 0, Generic LTE-FDD (0); Frequency: 1900 MHz;Duty Cycle: 1:1
Medium parameters used: f = 1900 MHz; σ = 1.466 S/m; ε_r = 41.665; ρ = 1000 kg/m^3
Phantom section: Flat Section
Ambient Temperature:22.0°C;Liquid Temperature:21.7°C;

DASY Configuration:

- Probe: EX3DV4 - SN7494; ConvF(8.57, 8.57, 8.57) @ 1900 MHz; Calibrated: 3/25/2019
- Sensor-Surface: 1.4mm (Mechanical Surface Detection)
- Electronics: DAE4 Sn1549; Calibrated: 3/19/2019
- Phantom: Twin-SAM V8.0 ; Type: QD 000 P41 AA; Serial: 1974
- DASY52 52.10.2(1495); SEMCAD X 14.6.12(7450)

Front/CH 19100/Area Scan (31x41x1): Interpolated grid: dx=1.500 mm, dy=1.500 mm=
Maximum value of SAR (interpolated) = 1.83 W/kg

Front/CH 19100/Zoom Scan (5x5x7)/Cube 0: Measurement grid: dx=8mm, dy=8mm, dz=5mm
Reference Value = 32.50 V/m; Power Drift = 0.18 dB
Peak SAR (extrapolated) = 2.09 W/kg
SAR(1 g) = 1.05 W/kg; SAR(10 g) = 0.644 W/kg
Maximum value of SAR (measured) = 1.72 W/kg

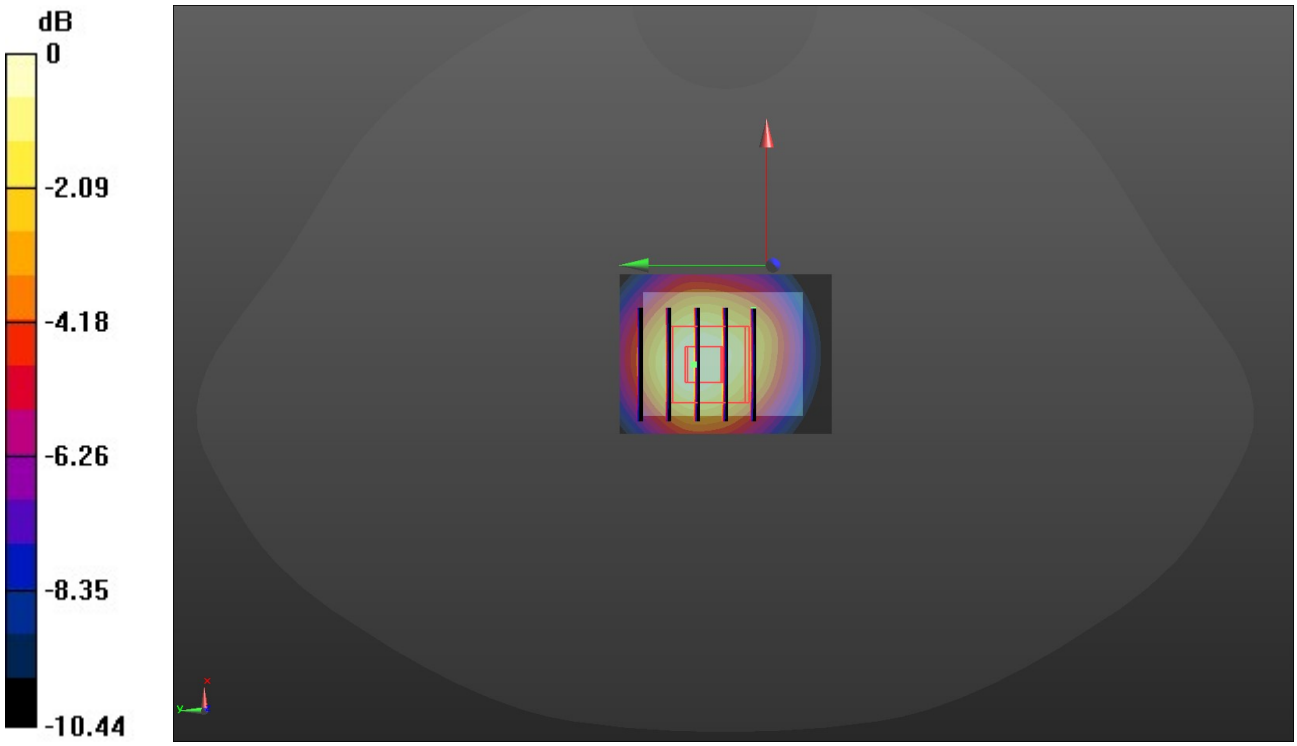

0 dB = 1.72 W/kg = 2.36 dBW/kg

Test Laboratory: Huatongwei International Inspection Co., Ltd.,SAR Lab Date: 5/9/2019

LTE Band 4-Head

Communication System: UID 0, Generic LTE-FDD (0); Frequency: 1745 MHz;Duty Cycle: 1:1
Medium parameters used: f = 1745 MHz; σ = 1.371 S/m; ε_r = 41.952; ρ = 1000 kg/m^3
Phantom section: Flat Section
Ambient Temperature:21.9°C;Liquid Temperature:21.7°C;

DASY Configuration:

- Probe: EX3DV4 - SN7494; ConvF(8.91, 8.91, 8.91) @ 1745 MHz; Calibrated: 3/25/2019
- Sensor-Surface: 1.4mm (Mechanical Surface Detection)
- Electronics: DAE4 Sn1549; Calibrated: 3/19/2019
- Phantom: Twin-SAM V8.0 ; Type: QD 000 P41 AA; Serial: 1974
- DASY52 52.10.2(1495); SEMCAD X 14.6.12(7450)

Front/CH 20300/Area Scan (31x41x1): Interpolated grid: dx=1.500 mm, dy=1.500 mm
Maximum value of SAR (interpolated) = 1.29 W/kg

Front/CH 20300/Zoom Scan (5x5x7)/Cube 0: Measurement grid: dx=8mm, dy=8mm, dz=5mm
Reference Value = 25.58 V/m; Power Drift = -0.01 dB
Peak SAR (extrapolated) = 1.24 W/kg
SAR(1 g) = 0.692 W/kg; SAR(10 g) = 0.394 W/kg
Maximum value of SAR (measured) = 1.02 W/kg

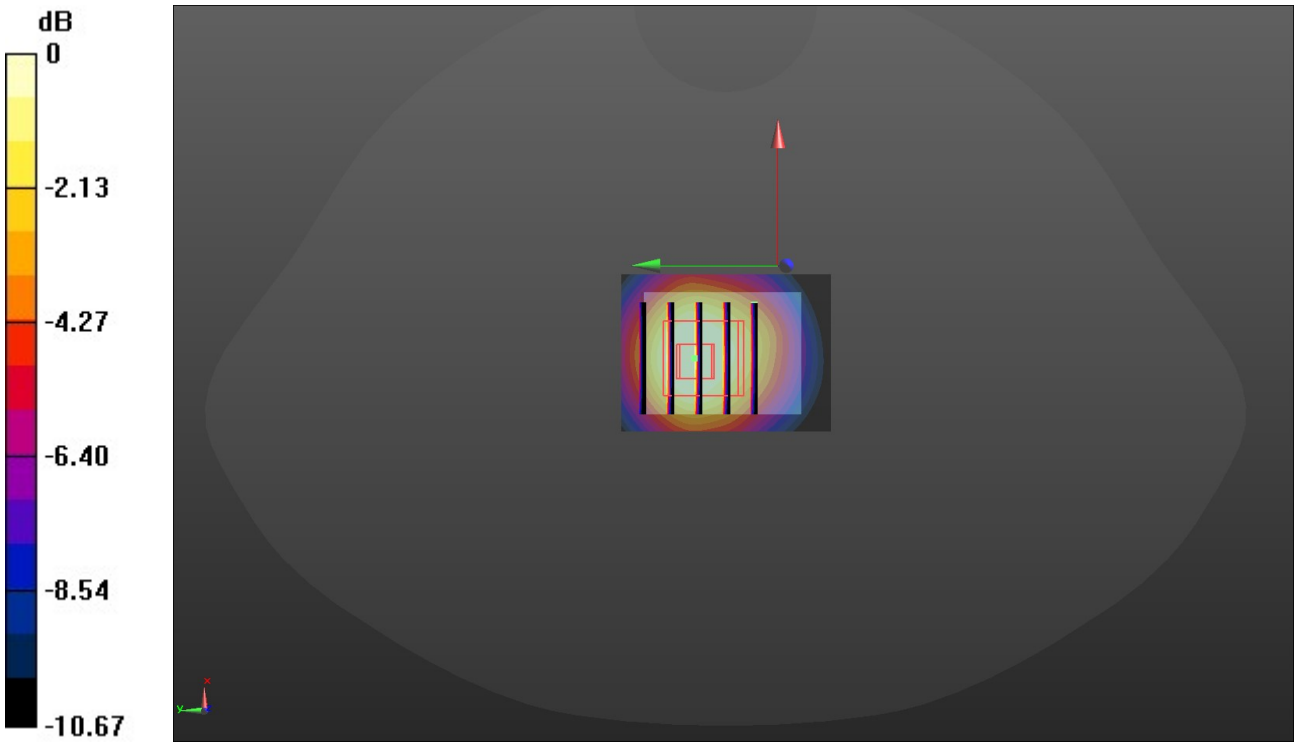

0 dB = 1.02 W/kg = 0.09 dBW/kg

Test Laboratory: Huatongwei International Inspection Co., Ltd.,SAR Lab Date: 5/30/2019

LTE Band 7-Head

Communication System: UID 0, Generic LTE-FDD (0); Frequency: 2510 MHz;Duty Cycle: 1:1
Medium parameters used: f = 2510 MHz; σ = 1.898 S/m; ε_r = 40.794; ρ = 1000 kg/m^3
Phantom section: Flat Section
Ambient Temperature:22.0°C;Liquid Temperature:21.8°C;

DASY Configuration:

- Probe: EX3DV4 - SN7494; ConvF(7.9, 7.9, 7.9) @ 2510 MHz; Calibrated: 3/25/2019
- Sensor-Surface: 1.4mm (Mechanical Surface Detection)
- Electronics: DAE4 Sn1549; Calibrated: 3/19/2019
- Phantom: Twin-SAM V8.0 ; Type: QD 000 P41 AA; Serial: 1974
- DASY52 52.10.2(1495); SEMCAD X 14.6.12(7450)

Front/CH 20850/Area Scan (41x61x1): Interpolated grid: dx=1.200 mm, dy=1.200 mm
Maximum value of SAR (interpolated) = 1.61 W/kg

Front/CH 20850/Zoom Scan (7x7x7)/Cube 0: Measurement grid: dx=5mm, dy=5mm, dz=5mm
Reference Value = 8.734 V/m; Power Drift = 0.09 dB
Peak SAR (extrapolated) = 2.44 W/kg
SAR(1 g) = 0.986 W/kg; SAR(10 g) = 0.429 W/kg
Maximum value of SAR (measured) = 1.74 W/kg

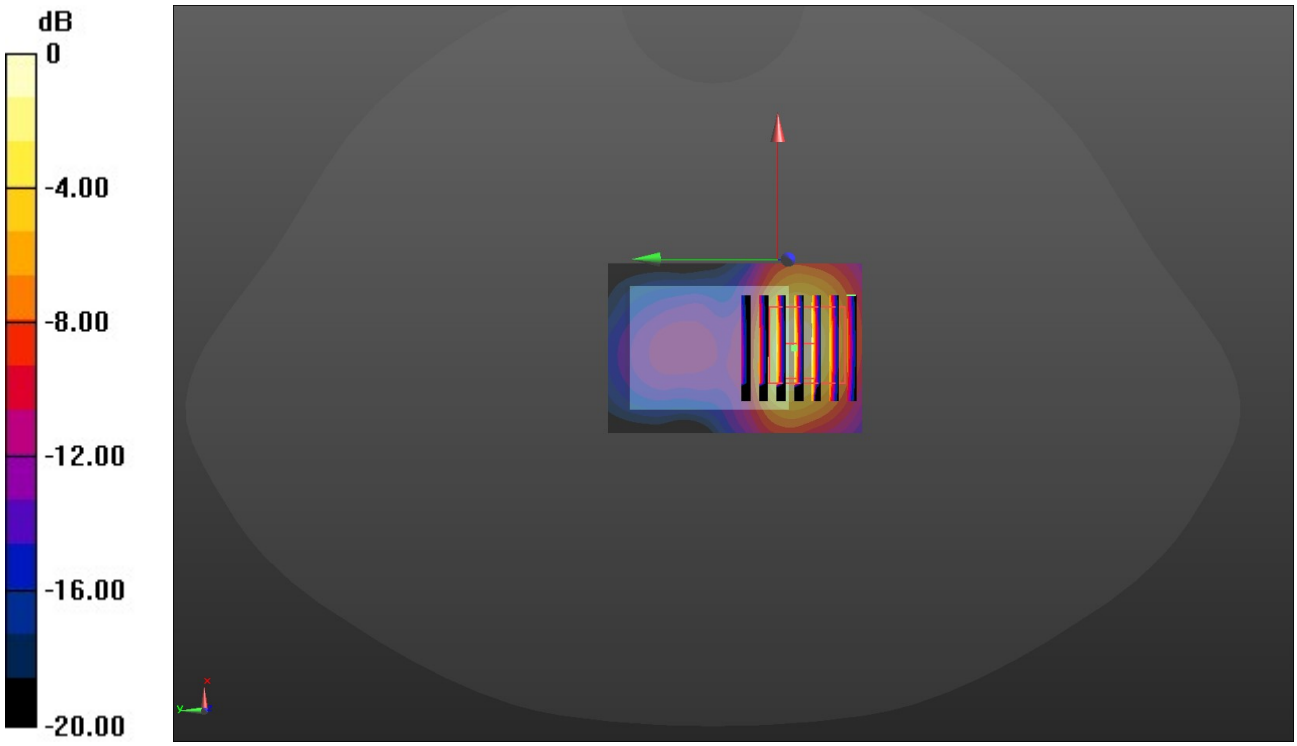

0 dB = 1.74 W/kg = 2.41 dBW/kg

Test Laboratory: Huatongwei International Inspection Co., Ltd.,SAR Lab Date: 5/17/2019

WIFI-2.4G-Head

Communication System: UID 0, Generic WIFI (0); Frequency: 2462 MHz;Duty Cycle: 1:1
Medium parameters used (interpolated): f = 2462 MHz; σ = 1.852 S/m; ε_r = 40.886; ρ = 1000 kg/m^3
Phantom section: Flat Section
Ambient Temperature:21.9°C;Liquid Temperature:21.7°C;

DASY Configuration:

- Probe: EX3DV4 - SN7494; ConvF(7.9, 7.9, 7.9) @ 2462 MHz; Calibrated: 3/25/2019
- Sensor-Surface: 1.4mm (Mechanical Surface Detection)
- Electronics: DAE4 Sn1549; Calibrated: 3/19/2019
- Phantom: Twin-SAM V8.0 ; Type: QD 000 P41 AA; Serial: 1974
- DASY52 52.10.2(1495); SEMCAD X 14.6.12(7450)

Front/CH 11/Area Scan (31x41x1): Interpolated grid: dx=1.200 mm, dy=1.200 mm

Info: Interpolated medium parameters used for SAR evaluation.
Maximum value of SAR (interpolated) = 0.0825 W/kg

Front/CH 11/Zoom Scan (7x8x7)/Cube 0: Measurement grid: dx=5mm, dy=5mm, dz=5mm
Reference Value = 6.448 V/m; Power Drift = -0.13 dB
Peak SAR (extrapolated) = 0.0810 W/kg
SAR(1 g) = 0.042 W/kg; SAR(10 g) = 0.024 W/kg

Info: Interpolated medium parameters used for SAR evaluation.
Maximum value of SAR (measured) = 0.0648 W/kg

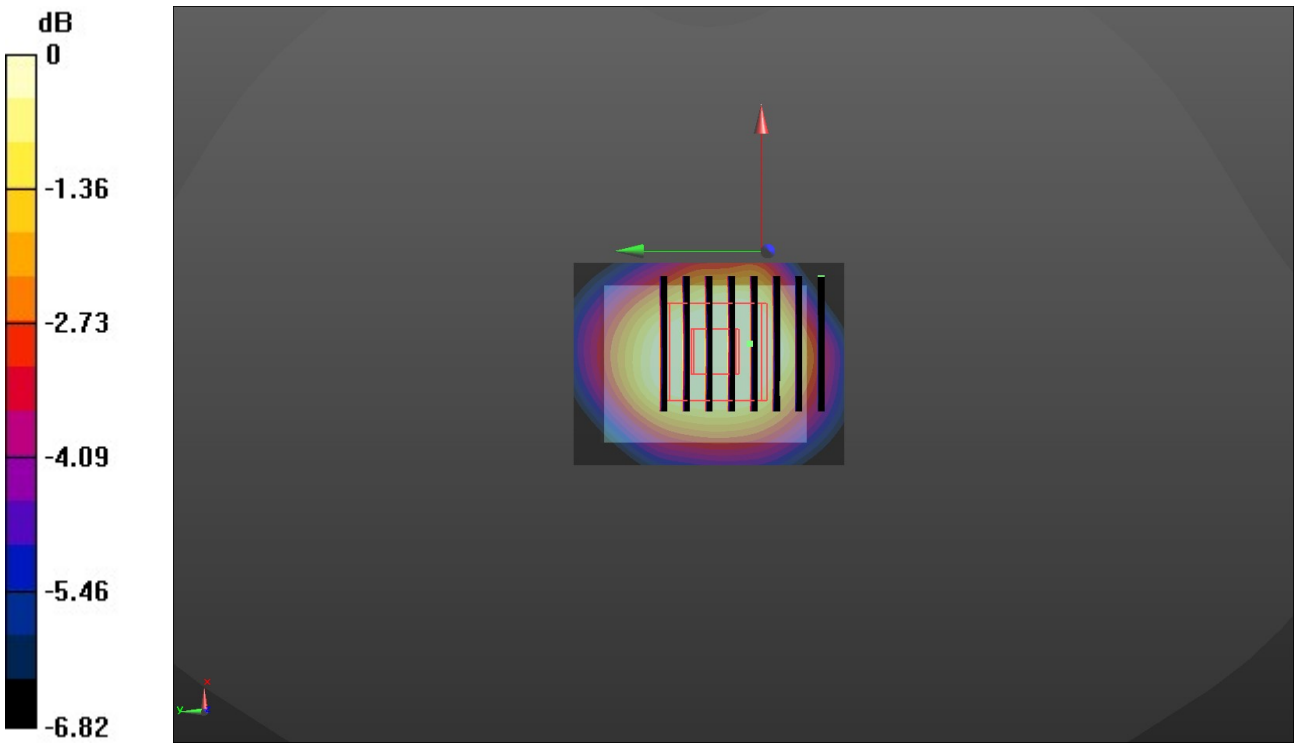

0 dB = 0.0648 W/kg = -11.88 dBW/kg

Test Laboratory: Huatongwei International Inspection Co., Ltd.,SAR Lab Date: 5/8/2019

GSM 850-Limbs

Communication System: UID 0, Generic GPRS(TDMA, GMSK, TN 0-1-2) (0); Frequency: 824.2 MHz;Duty Cycle: 1:2.66993
Medium parameters used: f = 825 MHz; σ = 0.978 S/m; ε_r = 55.245; ρ = 1000 kg/m^3
Phantom section: Flat Section
Ambient Temperature:21.9°C;Liquid Temperature:21.7°C;

DASY Configuration:

- Probe: EX3DV4 - SN7494; ConvF(10.46, 10.46, 10.46) @ 824.2 MHz; Calibrated: 3/25/2019
- Sensor-Surface: 1.4mm (Mechanical Surface Detection)
- Electronics: DAE4 Sn1549; Calibrated: 3/19/2019
- Phantom: ELI V8.0 ; Type: QD OVA 004 AA ; Serial: 2078
- DASY52 52.10.2(1495); SEMCAD X 14.6.12(7450)

Rear/CH 128/Area Scan (31x41x1): Interpolated grid: dx=1.500 mm, dy=1.500 mm
Maximum value of SAR (interpolated) = 0.830 W/kg

Rear/CH 128/Zoom Scan (5x5x7)/Cube 0: Measurement grid: dx=8mm, dy=8mm, dz=5mm
Reference Value = 24.39 V/m; Power Drift = -0.10 dB
Peak SAR (extrapolated) = 1.14 W/kg
SAR(1 g) = 0.445 W/kg; SAR(10 g) = 0.263 W/kg
Maximum value of SAR (measured) = 0.746 W/kg

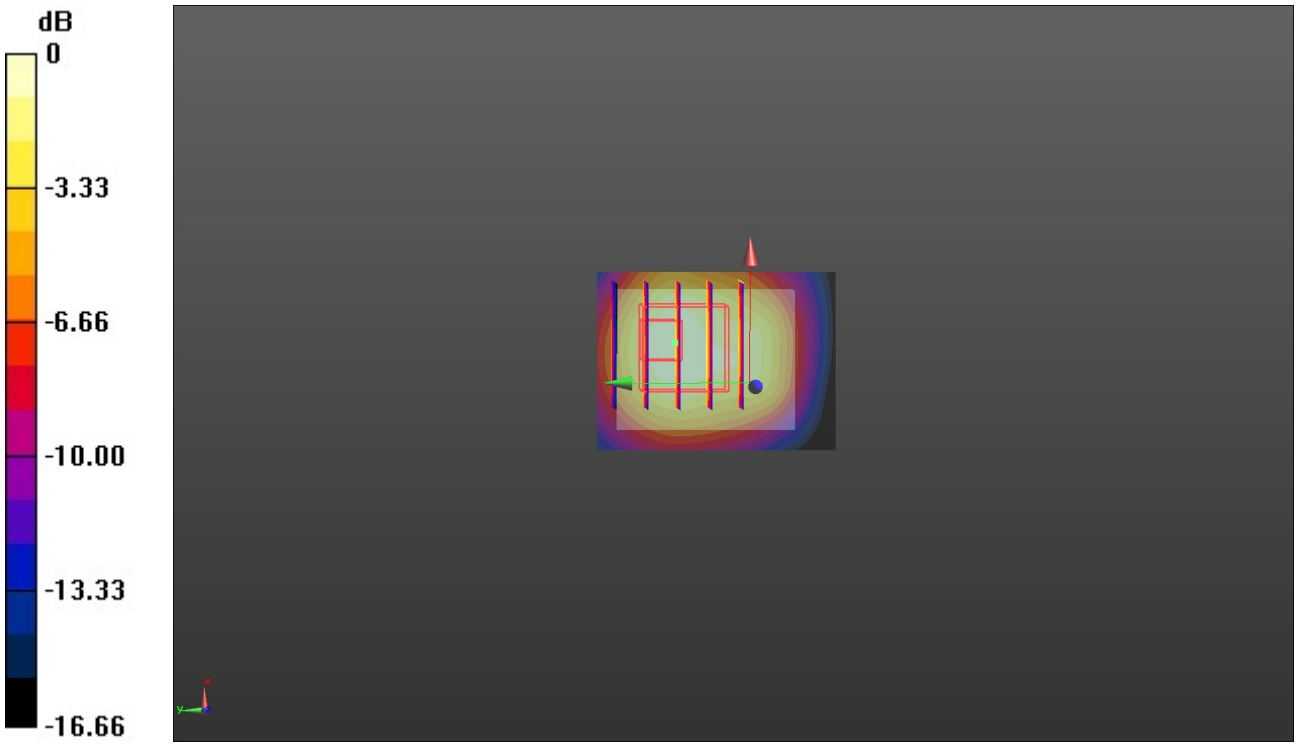

0 dB = 0.746 W/kg = -1.27 dBW/kg

Test Laboratory: Huatongwei International Inspection Co., Ltd.,SAR Lab Date: 5/13/2019

GSM 1900-Limbs

Communication System: UID 0, Generic GPRS(TDMA, GMSK, TN 0-1-2-3) (0); Frequency: 1850.2 MHz;Duty Cycle: 1:2.00447
Medium parameters used (interpolated): f = 1850.2 MHz; σ = 1.524 S/m; ε_r = 53.3; ρ = 1000 kg/m^3
Phantom section: Flat Section
Ambient Temperature:22.0°C;Liquid Temperature:21.7°C;

DASY Configuration:

- Probe: EX3DV4 - SN7494; ConvF(8.38, 8.38, 8.38) @ 1850.2 MHz; Calibrated: 3/25/2019
- Sensor-Surface: 1.4mm (Mechanical Surface Detection)
- Electronics: DAE4 Sn1549; Calibrated: 3/19/2019
- Phantom: ELI V8.0 ; Type: QD OVA 004 AA ; Serial: 2078
- DASY52 52.10.2(1495); SEMCAD X 14.6.12(7450)

Rear/CH 512/Area Scan (31x41x1): Interpolated grid: dx=1.500 mm, dy=1.500 mm

Info: Interpolated medium parameters used for SAR evaluation.
Maximum value of SAR (interpolated) = 2.41 W/kg

Rear/CH 512/Zoom Scan (5x5x7)/Cube 0: Measurement grid: dx=8mm, dy=8mm, dz=5mm
Reference Value = 36.97 V/m; Power Drift = -0.19 dB
Peak SAR (extrapolated) = 2.24 W/kg
SAR(1 g) = 1.41 W/kg; SAR(10 g) = 0.779 W/kg

Info: Interpolated medium parameters used for SAR evaluation.
Maximum value of SAR (measured) = 1.93 W/kg

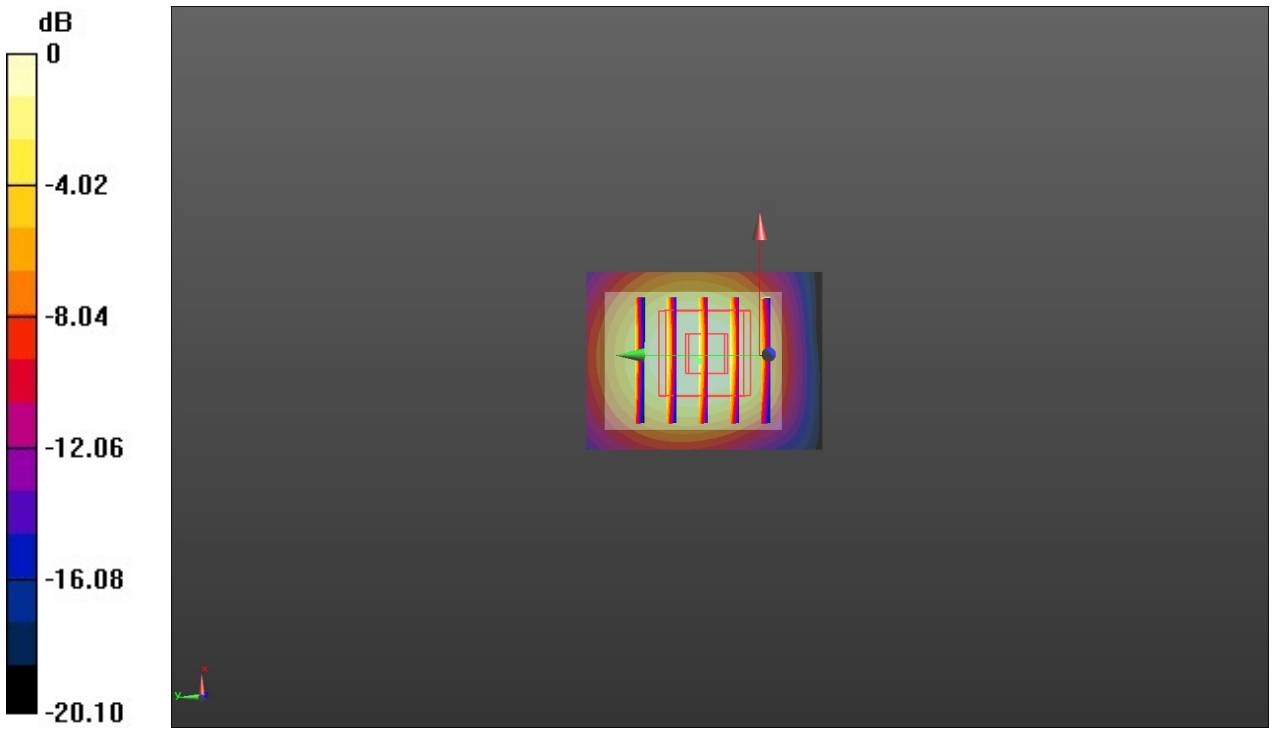

0 dB = 1.93 W/kg = 2.86 dBW/kg

Test Laboratory: Huatongwei International Inspection Co., Ltd.,SAR Lab Date: 5/13/2019

WCDMA Band II-Limbs

Communication System: UID 0, Generic UMTS (0); Frequency: 1880 MHz;Duty Cycle: 1:1
Medium parameters used: f = 1880 MHz; σ = 1.539 S/m; ε_r = 53.741; ρ = 1000 kg/m^3
Phantom section: Flat Section
Ambient Temperature:22.7°C;Liquid Temperature:22.4°C;

DASY Configuration:

- Probe: EX3DV4 - SN7494; ConvF(8.38, 8.38, 8.38) @ 1880 MHz; Calibrated: 3/25/2019
- Sensor-Surface: 1.4mm (Mechanical Surface Detection)
- Electronics: DAE4 Sn1549; Calibrated: 3/19/2019
- Phantom: ELI V8.0 ; Type: QD OVA 004 AA ; Serial: 2078
- DASY52 52.10.2(1495); SEMCAD X 14.6.12(7450)

Rear/CH 9400/Area Scan (31x41x1): Interpolated grid: dx=1.500 mm, dy=1.500 mm
Maximum value of SAR (interpolated) = 4.09 W/kg

Rear/CH 9400/Zoom Scan (5x5x7)/Cube 0: Measurement grid: dx=8mm, dy=8mm, dz=5mm
Reference Value = 46.72 V/m; Power Drift = 0.10 dB
Peak SAR (extrapolated) = 3.92 W/kg
SAR(1 g) = 2.46 W/kg; SAR(10 g) = 1.35 W/kg
Maximum value of SAR (measured) = 3.37 W/kg

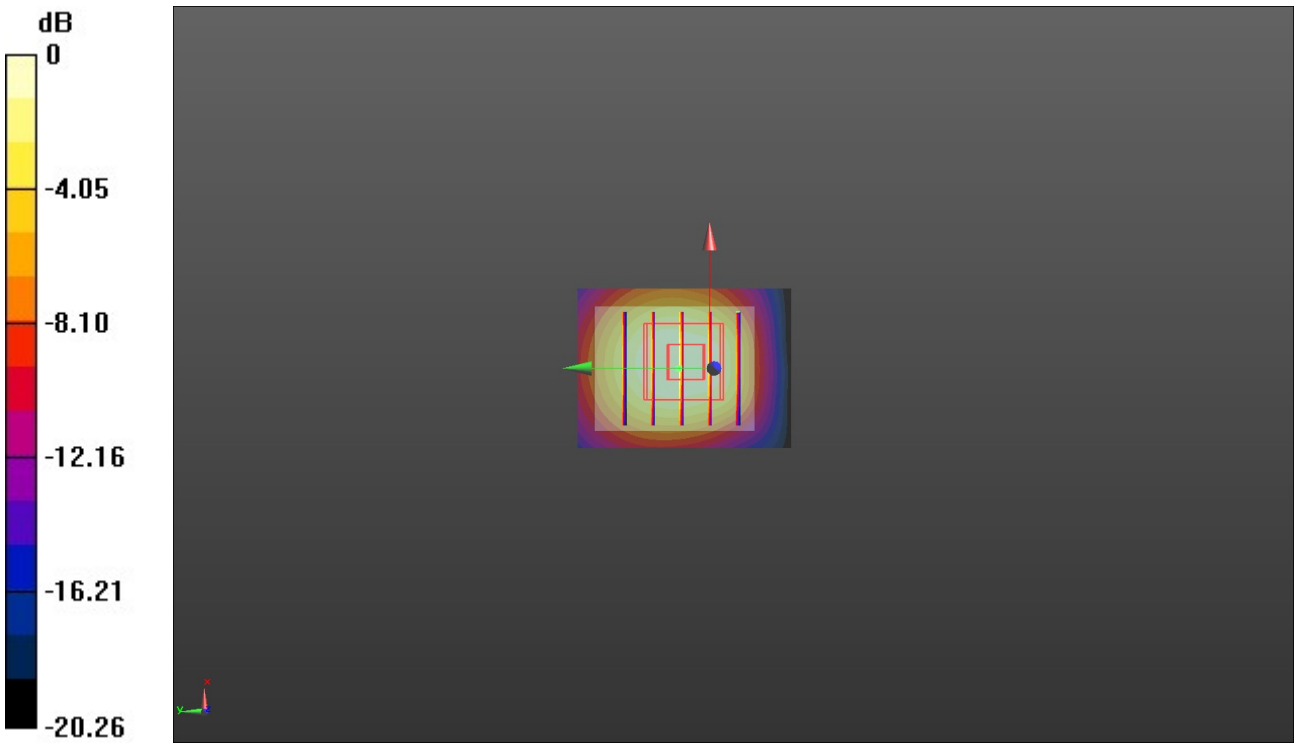

0 dB = 3.37 W/kg = 5.28 dBW/kg

Test Laboratory: Huatongwei International Inspection Co., Ltd.,SAR Lab Date: 5/8/2019

WCDMA Band V-Limbs

Communication System: UID 0, Generic UMTS (0); Frequency: 836.6 MHz;Duty Cycle: 1:1
Medium parameters used (interpolated): f = 836.6 MHz; σ = 0.983 S/m; ε_r = 55.203; ρ = 1000 kg/m^3
Phantom section: Flat Section
Ambient Temperature:21.8°C;Liquid Temperature:21.6°C;

DASY Configuration:

- Probe: EX3DV4 - SN7494; ConvF(10.46, 10.46, 10.46) @ 836.6 MHz; Calibrated: 3/25/2019
- Sensor-Surface: 1.4mm (Mechanical Surface Detection)
- Electronics: DAE4 Sn1549; Calibrated: 3/19/2019
- Phantom: ELI V8.0 ; Type: QD OVA 004 AA ; Serial: 2078
- DASY52 52.10.2(1495); SEMCAD X 14.6.12(7450)

Rear/CH 4183/Area Scan (31x41x1): Interpolated grid: dx=1.500 mm, dy=1.500 mm

Info: Interpolated medium parameters used for SAR evaluation.
Maximum value of SAR (interpolated) = 0.926 W/kg

Rear/CH 4183/Zoom Scan (5x5x7)/Cube 0: Measurement grid: dx=8mm, dy=8mm, dz=5mm
Reference Value = 24.95 V/m; Power Drift = 0.04 dB
Peak SAR (extrapolated) = 1.27 W/kg
SAR(1 g) = 0.538 W/kg; SAR(10 g) = 0.328 W/kg

Info: Interpolated medium parameters used for SAR evaluation.
Maximum value of SAR (measured) = 0.848 W/kg

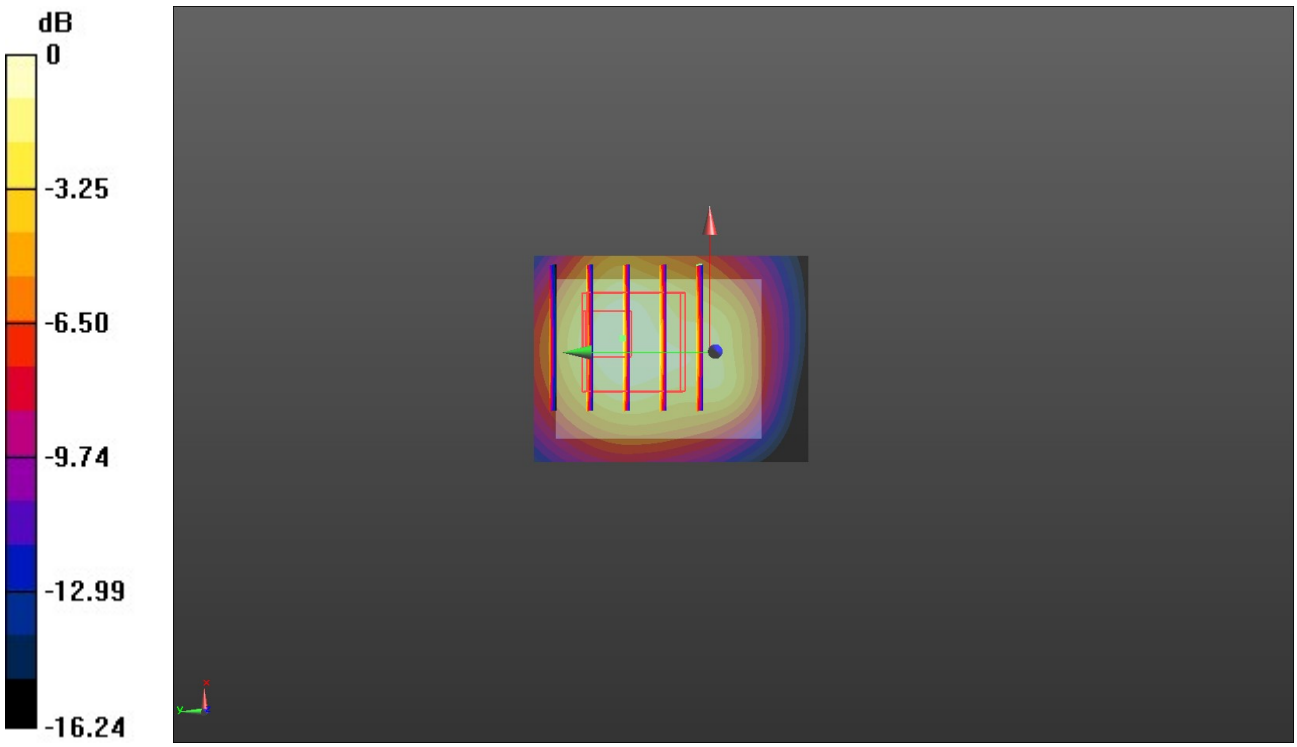

0 dB = 0.848 W/kg = -0.72 dBW/kg

Test Laboratory: Huatongwei International Inspection Co., Ltd.,SAR Lab Date: 5/13/2019

LTE Band 2-Limbs

Communication System: UID 0, Generic LTE-FDD (0); Frequency: 1860 MHz;Duty Cycle: 1:1
Medium parameters used: f = 1860 MHz; σ = 1.524 S/m; ε_r = 53.3; ρ = 1000 kg/m^3
Phantom section: Flat Section
Ambient Temperature:22.1°C;Liquid Temperature:21.8°C;

DASY Configuration:

- Probe: EX3DV4 - SN7494; ConvF(8.38, 8.38, 8.38) @ 1860 MHz; Calibrated: 3/25/2019
- Sensor-Surface: 1.4mm (Mechanical Surface Detection)
- Electronics: DAE4 Sn1549; Calibrated: 3/19/2019
- Phantom: ELI V8.0 ; Type: QD OVA 004 AA ; Serial: 2078
- DASY52 52.10.2(1495); SEMCAD X 14.6.12(7450)

Rear/CH 18700/Area Scan (31x41x1): Interpolated grid: dx=1.500 mm, dy=1.500 mm
Maximum value of SAR (interpolated) = 3.08 W/kg

Rear/CH 18700/Zoom Scan (5x5x7)/Cube 0: Measurement grid: dx=8mm, dy=8mm, dz=5mm
Reference Value = 41.02 V/m; Power Drift = 0.12 dB
Peak SAR (extrapolated) = 2.96 W/kg
SAR(1 g) = 1.81 W/kg; SAR(10 g) = 0.997 W/kg
Maximum value of SAR (measured) = 2.49 W/kg

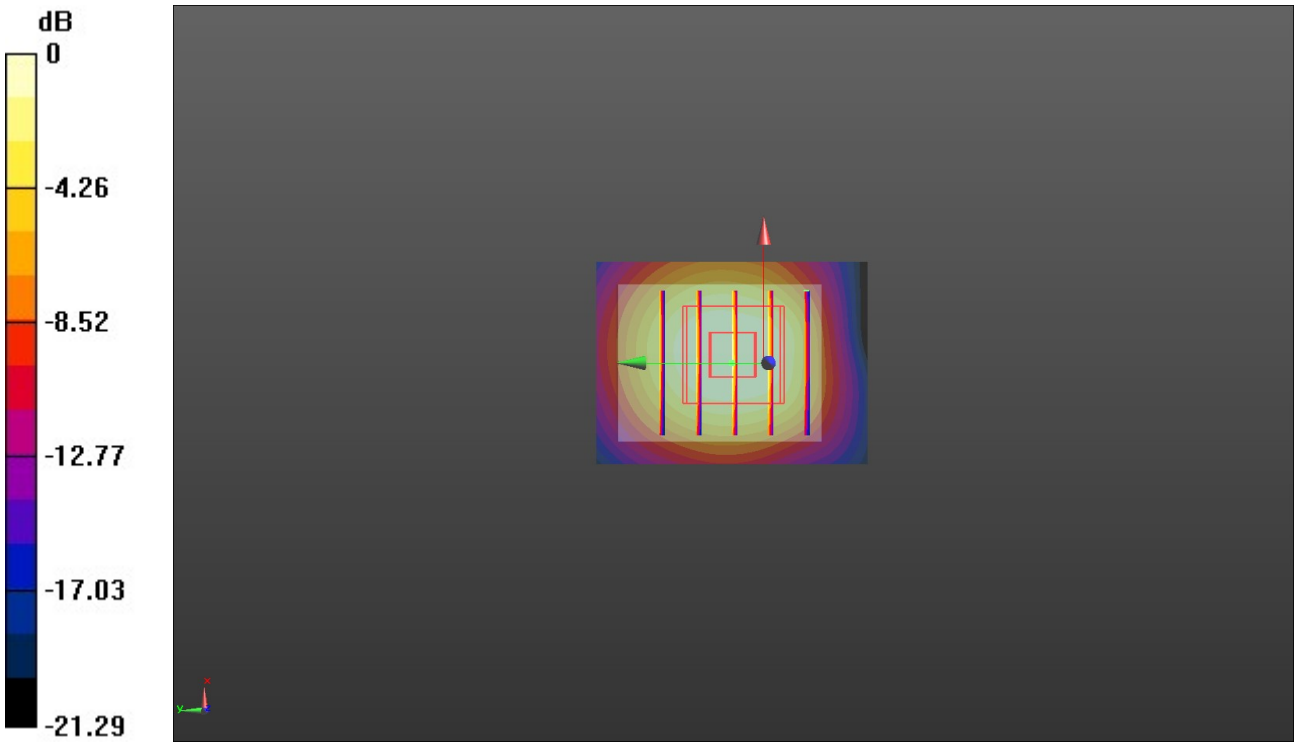

0 dB = 2.49 W/kg = 3.96 dBW/kg

Test Laboratory: Huatongwei International Inspection Co., Ltd.,SAR Lab Date: 5/9/2019

LTE Band 4-Limbs

Communication System: UID 0, Generic LTE-FDD (0); Frequency: 1745 MHz;Duty Cycle: 1:1
Medium parameters used (interpolated): f = 1745 MHz; σ = 1.486 S/m; ε_r = 53.458; ρ = 1000 kg/m^3
Phantom section: Flat Section
Ambient Temperature:22.0°C;Liquid Temperature:21.8°C;

DASY Configuration:

- Probe: EX3DV4 - SN7494; ConvF(8.51, 8.51, 8.51) @ 1745 MHz; Calibrated: 3/25/2019
- Sensor-Surface: 1.4mm (Mechanical Surface Detection)
- Electronics: DAE4 Sn1549; Calibrated: 3/19/2019
- Phantom: ELI V8.0 ; Type: QD OVA 004 AA ; Serial: 2078
- DASY52 52.10.2(1495); SEMCAD X 14.6.12(7450)

Rear/CH 20300/Area Scan (31x41x1): Interpolated grid: dx=1.500 mm, dy=1.500 mm

Info: Interpolated medium parameters used for SAR evaluation.
Maximum value of SAR (interpolated) = 2.22 W/kg

Rear/CH 20300/Zoom Scan (5x5x7)/Cube 0: Measurement grid: dx=8mm, dy=8mm, dz=5mm
Reference Value = 35.16 V/m; Power Drift = 0.18 dB
Peak SAR (extrapolated) = 2.17 W/kg
SAR(1 g) = 1.3 W/kg; SAR(10 g) = 0.725 W/kg

Info: Interpolated medium parameters used for SAR evaluation.
Maximum value of SAR (measured) = 1.82 W/kg

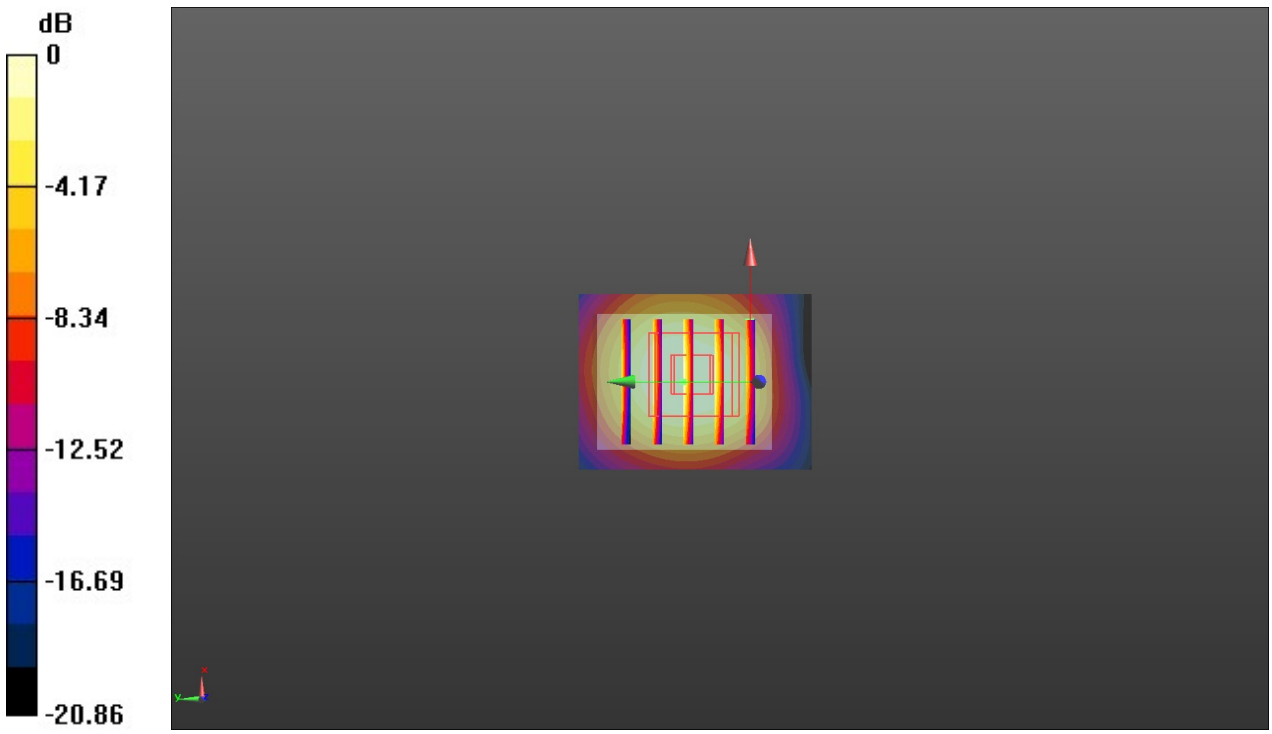

0 dB = 1.82 W/kg = 2.60 dBW/kg

Test Laboratory: Huatongwei International Inspection Co., Ltd.,SAR Lab Date: 5/30/2019

LTE Band 7-Limbs

Communication System: UID 0, Generic LTE-FDD (0); Frequency: 2560 MHz;Duty Cycle: 1:1
Medium parameters used: f = 2560 MHz; σ = 2.109 S/m; ε_r = 52.848; ρ = 1000 kg/m^3
Phantom section: Flat Section
Ambient Temperature:21.9°C;Liquid Temperature:21.7°C;

DASY Configuration:

- Probe: EX3DV4 - SN7494; ConvF(7.69, 7.69, 7.69) @ 2560 MHz; Calibrated: 3/25/2019
- Sensor-Surface: 1.4mm (Mechanical Surface Detection)
- Electronics: DAE4 Sn1549; Calibrated: 3/19/2019
- Phantom: ELI V8.0 ; Type: QD OVA 004 AA ; Serial: 2078
- DASY52 52.10.2(1495); SEMCAD X 14.6.12(7450)

Rear/CH 21350/Area Scan (31x41x1): Interpolated grid: dx=1.200 mm, dy=1.200 mm
Maximum value of SAR (interpolated) = 1.08 W/kg

Rear/CH 21350/Zoom Scan (7x7x7)/Cube 0: Measurement grid: dx=5mm, dy=5mm, dz=5mm
Reference Value = 15.04 V/m; Power Drift = 0.12 dB
Peak SAR (extrapolated) = 1.89 W/kg
SAR(1 g) = 0.863 W/kg; SAR(10 g) = 0.388 W/kg
Maximum value of SAR (measured) = 1.49 W/kg

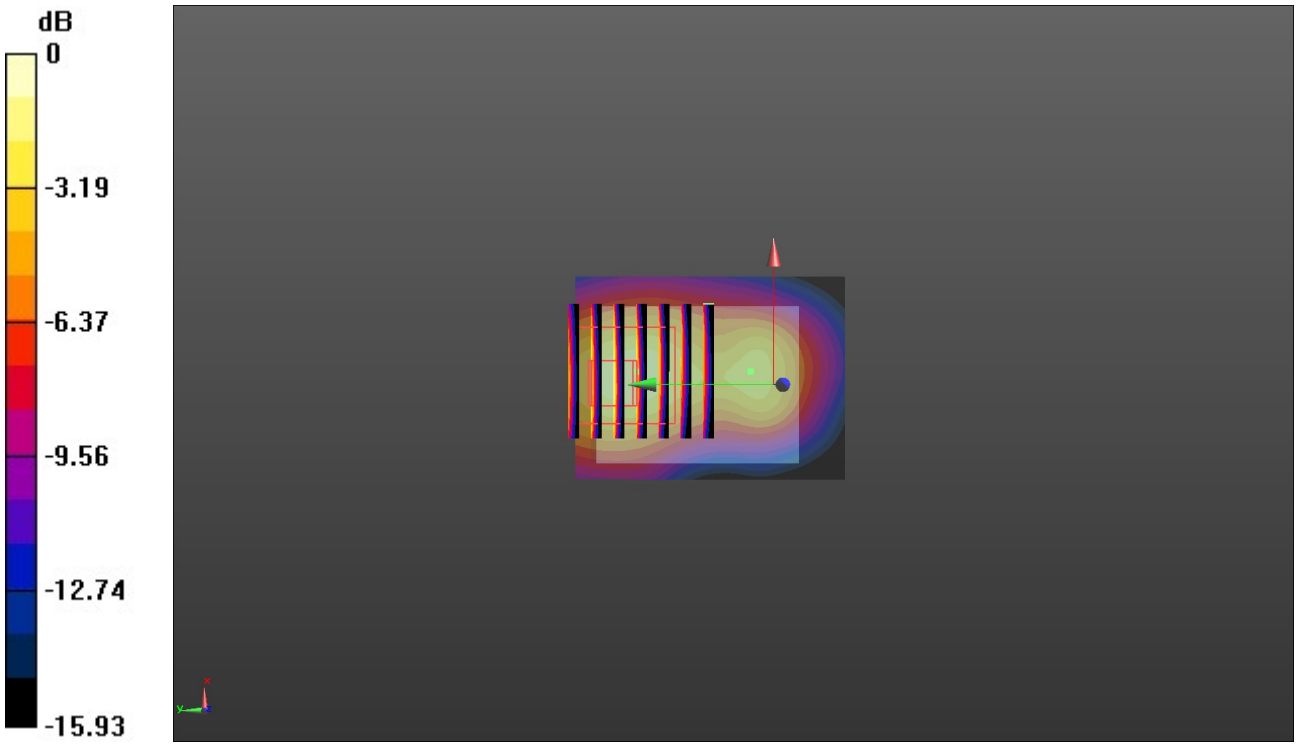

0 dB = 1.49 W/kg = 1.73 dBW/kg

Test Laboratory: Huatongwei International Inspection Co., Ltd.,SAR Lab Date: 5/17/2019

WIFI-2.4G-Limbs

Communication System: UID 0, Generic WIFI (0); Frequency: 2462 MHz;Duty Cycle: 1:1
Medium parameters used (interpolated): f = 2462 MHz; σ = 2.012 S/m; ε_r = 52.998; ρ = 1000 kg/m^3
Phantom section: Flat Section
Ambient Temperature:21.9°C;Liquid Temperature:21.6°C;

DASY Configuration:

- Probe: EX3DV4 - SN7494; ConvF(8, 8, 8) @ 2462 MHz; Calibrated: 3/25/2019
- Sensor-Surface: 1.4mm (Mechanical Surface Detection)
- Electronics: DAE4 Sn1549; Calibrated: 3/19/2019
- Phantom: ELI V8.0 ; Type: QD OVA 004 AA ; Serial: 2078
- DASY52 52.10.2(1495); SEMCAD X 14.6.12(7450)

Rear/CH 11/Area Scan (31x41x1): Interpolated grid: dx=1.200 mm, dy=1.200 mm

Info: Interpolated medium parameters used for SAR evaluation.
Maximum value of SAR (interpolated) = 1.08 W/kg

Rear/CH 11/Zoom Scan (5x5x7)/Cube 0: Measurement grid: dx=5mm, dy=5mm, dz=5mm
Reference Value = 16.18 V/m; Power Drift = 0.10 dB
Peak SAR (extrapolated) = 1.28 W/kg
SAR(1 g) = 0.599 W/kg; SAR(10 g) = 0.294 W/kg

Info: Interpolated medium parameters used for SAR evaluation.
Maximum value of SAR (measured) = 0.945 W/kg

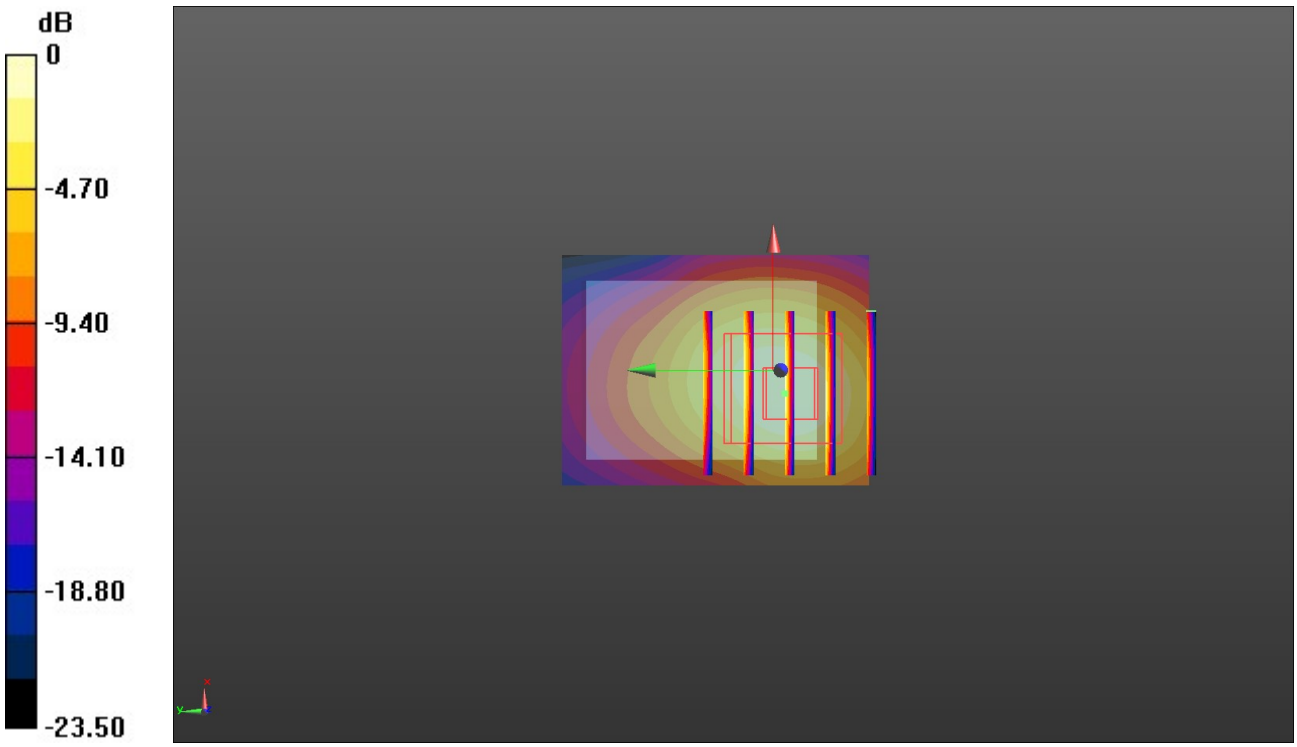

0 dB = 0.945 W/kg = -0.25 dBW/kg