The following features are available in this PDF document.

Quick Keyword Search

Enter the keyword in the search box and hit the search button

Quick Jump between Chapters

Click the title of a specific chapter on the Contents to jump to it

*Reading software such as Adobe Reader is needed to support the functions above.

ZHIYUN-EN-v1.00

ZHIYUN MOLUS G60

User Guide

Contents

☐ Brief Introduction

Brief Introduction · 5

☐ Product List

Product List · 1

☐ Get to Know ZHIYUN MOLUS G60

Get to Know ZHIYUN MOLUS G60 · · · · · · · · · · · · · · · · 3

☐ Power Supply

Power Supply · 4

☐ Installing and Removing ZHIYUN Mini Reflector (hereinafter referred to as "reflector")

Installing the Reflector · 5

Removing the Reflector · 5

☐ Installing the Tripod

Installing the Tripod · 6

☐ Installing and Removing ZHIYUN Mini Softbox (hereinafter referred to as "softbox")

Installing the Softbox · 7

Removing the Softbox · 10

☐ Installing and Removing ZHIYUN Dome Diffusion (hereinafter referred to as "dome diffusion")

Installing Dome Diffusion · · · · · · · · · · · · · · · · · · · 12

Removing Dome Diffusion · · · · · · · · · · · · · · · · · · · 12

☐ Bowens Mount Adapter A Instructions (hereinafter referred to as “adapter”)
Installing the Adapter · 13
Removing the Adapter · 15
Installing and Removing The Umbrella · · · · · · · · · · · 16

☐ Installing and Removing ZHIYUN Extension Plate (hereinafter referred to as “extension plate”)

☐ How to Use ZHIYUN MOLUS G60
Buttons and Knobs · 20
Display Screen · 21
Operation Instruction · 21
Power-on Setting · 21

☐ Firmware Upgrade

☐ Product Specifications

☐ Warranty Card
Warranty Period · 25
Warranty Exclusions · 25
Warranty Claim Procedure · · · · · · · · · · · · · · · · · · 25

☐ Contact Card

Brief Introduction

ZHIYUN MOLUS G60 is a portable fill light with high illuminance that supports adjustments in brightness and color temperature. The fill light comes with a bracket to be installed on a light stand or a camera, satisfying the lighting needed for commercial shooting, interviews, video filming, etc. MOLUS G60 has the following features:

1. Light and portable with excellent performance.
2. Comes with a display screen to display all kinds of parameters.
3. Comes with a bracket for versatile installation and lighting.
4. Available with various accessories for different lighting.
5. Can be powered via multiple ways.
6. Comes with a fan to dissipate heat.

WARNING

- This product is not waterproof. Prevent contact with any kind of liquid with the ZHIYUN MOLUS G60. Never use the product in the rain or a humid environment.
- If water accidentally enters the device when using, please stop using it immediately and contact the company or authorized maintenance personnel for maintenance, and continue to use it only when the maintenance is finished.
- Please connect the device to a grounded outlet before using.
- Do not expose this product to corrosive chemicals, inflammable and explosive materials.
- Do not touch the heating part when the product is working to avoid getting burned.
- Do not wrap or block the fans to avoid cooling effect damage.
- Do not turn the product directly to the eyes to avoid eyesight damage.
- Do not expose this product to an environment above 40°C .

BE CAREFUL

1. This product is a high-precision control device. Damage may be caused to the product if dropped or subject to external force, and this may result in malfunction.
2. Please keep your hands dry while using the product and use soft dry cloth for cleaning.

3. Keep this product out of the reach of children.
4. When not using this product, please disconnect the external power supply.
5. Do not place any other items on top of this product to avoid damage to this product.
6. Protect the product from dust and sand during use.
7. Before storing this product, please make sure it is completely cooled and store it in a dry and ventilated place.
8. Do not disassemble this product on your own. In the event of malfunctions, it should be repaired by ZHIYUN or authorized maintenance personnel.

Product List

Before using this product, please check carefully that all the following items are included in the product package. In case that any item is found missing, please contact ZHIYUN or your local selling agent.

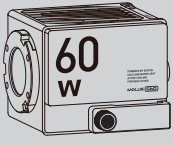

ZHIYUN MOLUS G60 x1

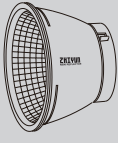

ZHIYUN Mini Reflector x1

DC Power Adapter x1

Dome Diffusion x1

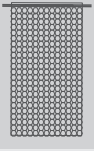

Power Adapter Organizer Bag x 1

Tripod x1*

ZHIYUN Mini Softbox x1*

Bowens Mount Adapter A x1*

Grid x1*

Storage Bag x1*

Items marked "*" are only included in ZHIYUN MOLUS G60 Combo.

Get to Know ZHIYUN MOLUS G60

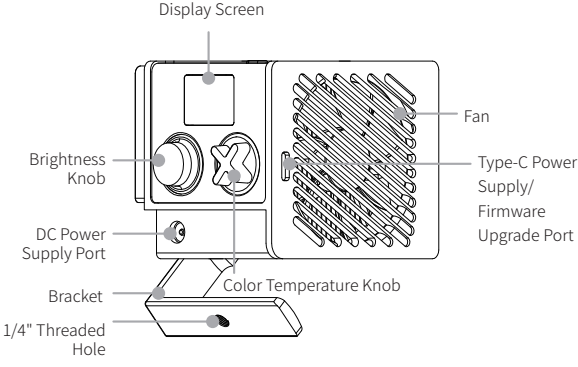

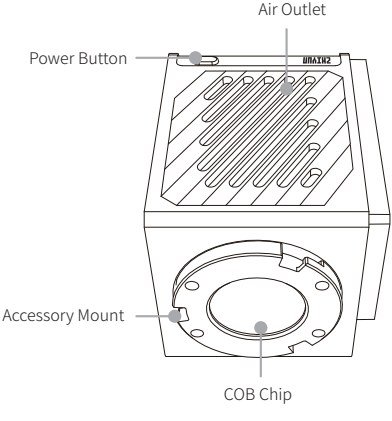

Power Supply

Battery is not included inside the device. For the ZHIYUN MOLUS G60 to work properly, please power the device using one of the following methods:

① **Power via USB charger:** Use the USB Type-C charging cable to connect the USB charger and the type-C power supply/firmware upgrade port of ZHIYUN MOLUS G60. Plug the charger into the AC socket to power ZHIYUN MOLUS G60. It is recommended to use a charger equal to or larger than 100W and supports PD fast charging protocol. The supply power will be displayed on the screen in real-time. When the input supply power is insufficient, it is unable to adjust the brightness of ZHIYUN MOLUS G60 to 100%.

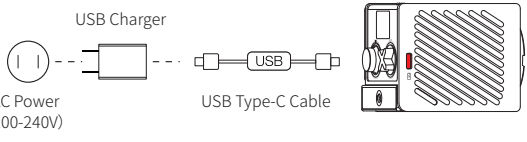

USB charger and USB Type-C cable are not provided.

② **Power via DC power adapter:** Connect the DC power adapter to the DC power supply port of ZHIYUN MOLUS G60 and an AC socket to power ZHIYUN MOLUS G60. Before supplying power, please rotate the bracket as shown in the image below to avoid the bracket blocking the DC power supply port and affecting the connection of DC power adapter.

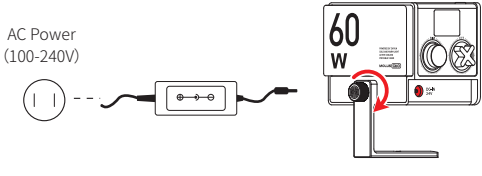

You can use power adapter organizer bag to organize the DC power adapter and hang at the proper location to avoid being stepped on.

Installing the Reflector

Align the reflector mount with the ZHIYUN MOLUS G60 accessory mount. Install the reflector to the ZHIYUN MOLUS G60 and rotate the reflector clockwise until you hear a click sound. The reflector is then installed.

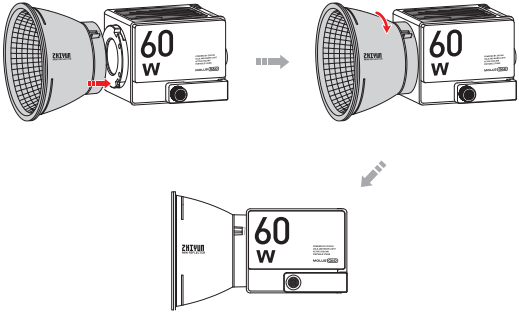

Removing the Reflector

Toggle the lock to another side ① and turn the reflector as shown in the image ②. Remove the reflector from the accessory mount ③ .

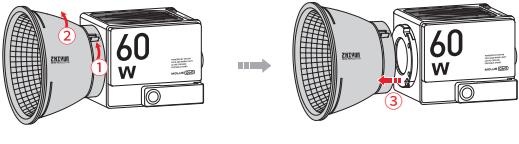

Installing the Tripod

Rotate the ZHIYUN MOLUS G60 bracket by 90°① and drive the bracket screw firmly ② . Align the 1/4" screw of the tripod with the 1/4" threaded hole of the bracket ③ and make sure a firm installation ④ . To adjust the angle, you can loosen the bracket screw and rotate the ZHIYUN MOLUS G60 around the screw ⑤. Drive the screw firmly when you finish adjusting ⑥ .

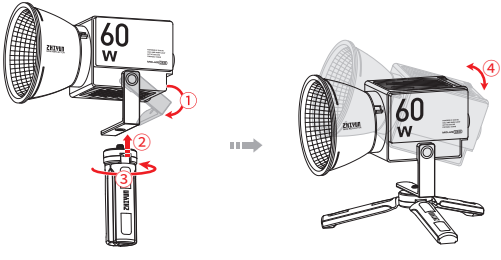

Installing the Softbox

Align the softbox mount with the ZHIYUN MOLUS G60 accessory mount. Install the softbox to the ZHIYUN MOLUS G60 ① and rotate the softbox as shown in the image until you hear a click sound ② . Loosen the softbox straps ③ , push the axis to the right as shown in the image until the softbox expands and clicks into the mount ④ . Expand the grid ⑤ and stick on the diffuser ⑥ .

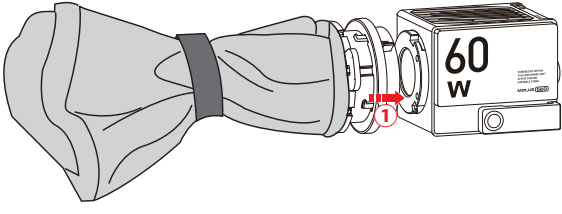

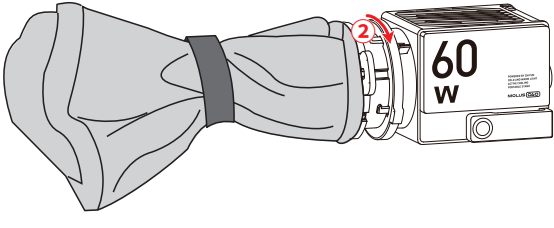

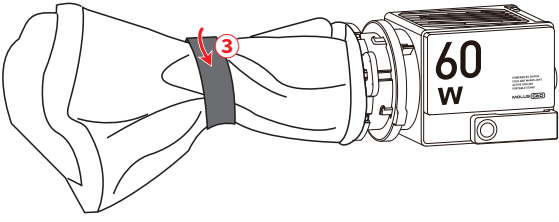
3
60
W
MOLUS G60

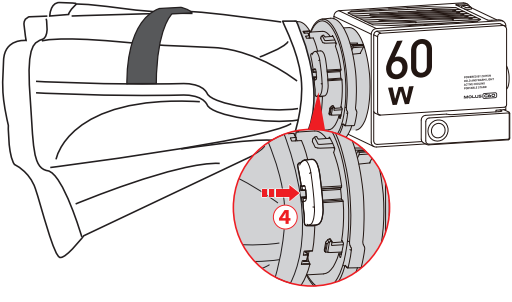
60
W
MOLUS G60
4

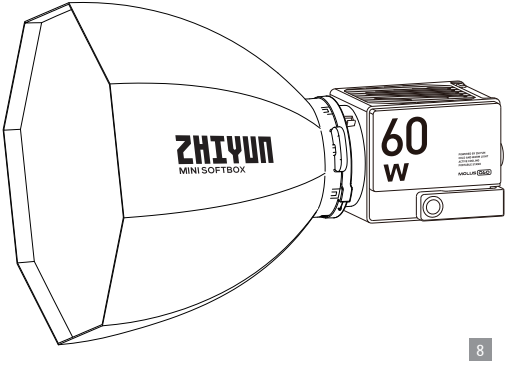
ZHIYUN
MINI SOFTBOX
60
W
MOLUS G60

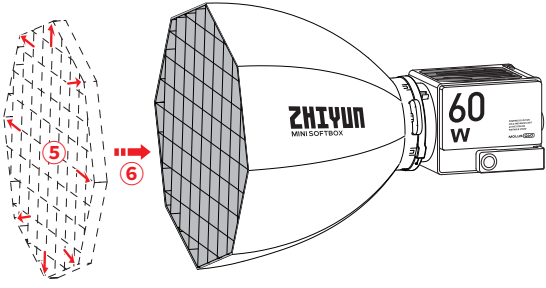
5
6
ZHIYUN
MINI SOFTBOX
60
W

Removing the Softbox

Remove the grid from the softbox ① and unlock the softbox mount swivel as shown in the image ② . Toggle the lock to another side ③ while turning the softbox as shown in the image ④ . Remove the softbox from the ZHIYUN MOLUS G60 accessory mount ⑤ . Pack the softbox and tie the straps.

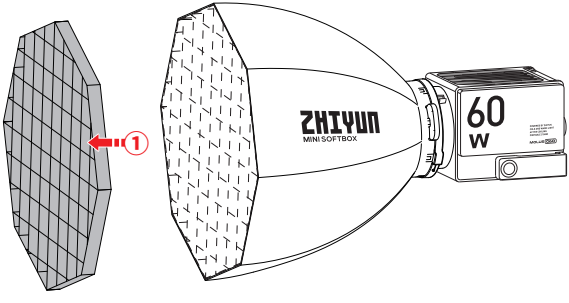

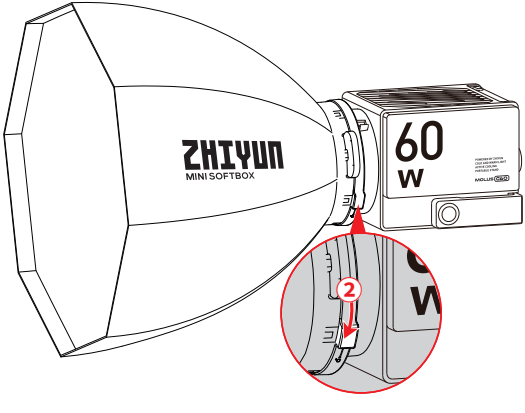

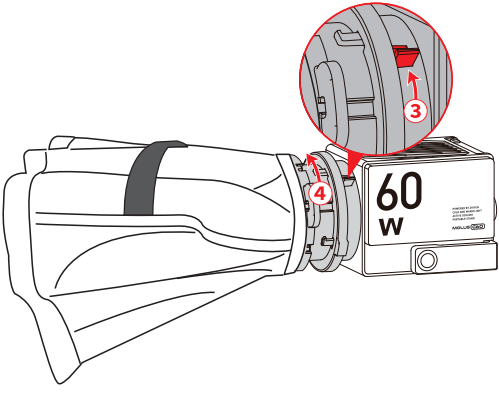
3
4
60
W

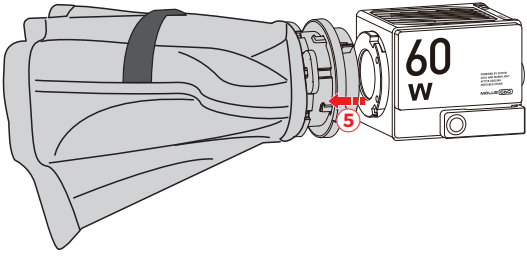
60
W
5

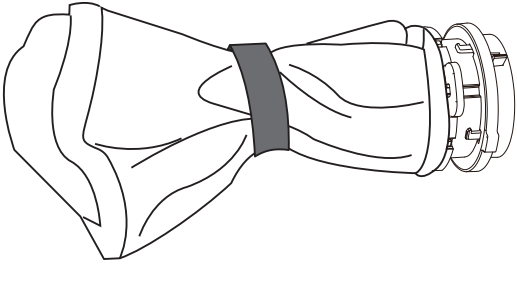

Installing Dome Diffusion

Install the reflector to ZHIYUN MOLUS G60. Expand the dome diffusion as shown in the image, and align the opening of the dome diffusion with the reflector. Engage the groove ring of the dome diffusion in the reflector.

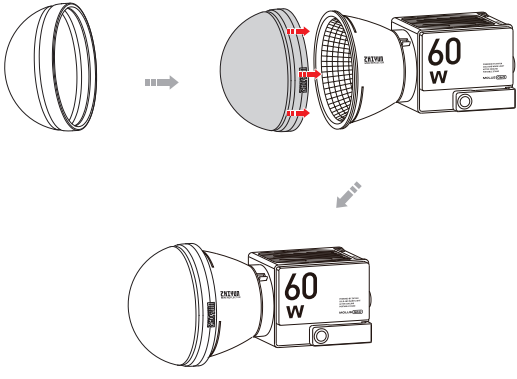

Removing Dome Diffusion

You can remove the dome diffusion from the reflector with your hand.

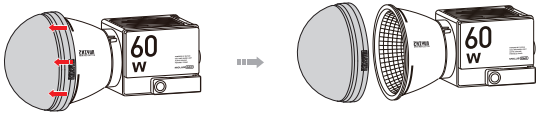

With the mount adapter, ZHIYUN MOLUS G60 can be used with accessories with a standard Bowens mount. The following instructions use a standard reflector with a Bowens mount as an example.

Installing the Adapter

Align the adapter mount with the ZHIYUN MOLUS G60 accessory mount, install the adapter to the ZHIYUN MOLUS G60 ① and rotate the adapter clockwise ② until you hear a click sound. Align the standard reflector mount with the adapter mount and install the standard reflector to the adapter ③ . Turn the standard reflector counterclockwise until the reflector is engaged in the adapter and cannot be turned ④ . Align the end of the adapter with the 1/4" screw on top of the light stand ⑤ , install the adapter to the light stand and tighten the adapter screw ⑥ . You can adjust the adapter angle if necessary ⑦ and tighten the adapter latch ⑧ .

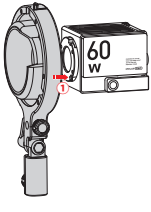

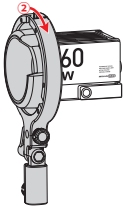

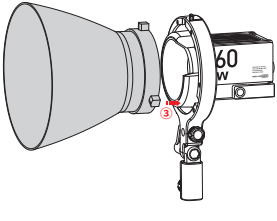

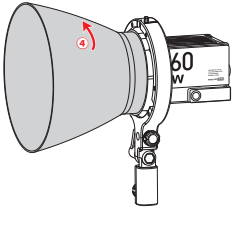

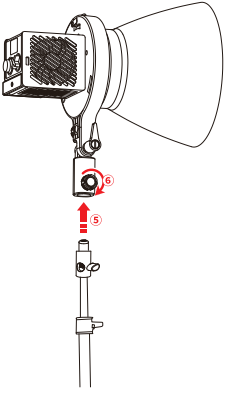

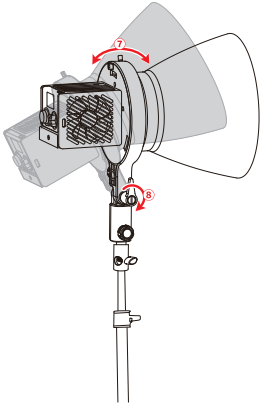

① Light stand is not provided.
②当转接环搭配保荣卡口柔光箱使用时，柔光箱直径应小于等于 90cm，重量应小于等于 1.6kg。

Removing the Adapter

Loosen the adapter screw ① and remove the adapter from the light stand ② . Press and hold in toward the right of the orange lock at the top of the adapter ③ and turn the standard reflector as shown in the image ④ . Remove the reflector from the adapter ⑤ , Press and hold the lock at the gap of the adapter as shown in the image ⑥ while turning ZHIYUN MOLUS G60 clockwise ⑦ . Remove the adapter from ZHIYUN MOLUS G60 ⑧ .

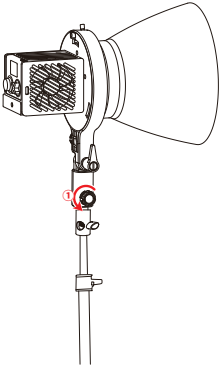

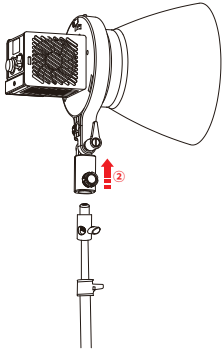

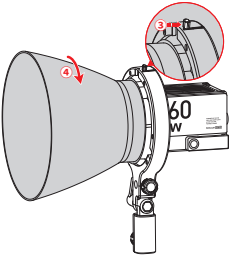

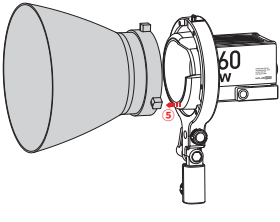

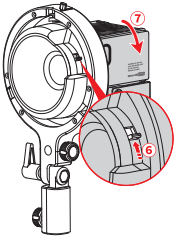

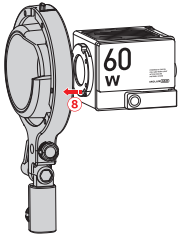

Installing and Removing The Umbrella

Insert the umbrella handle into the umbrella hole of the adapter and turn the knob clockwise. Turn counterclockwise to unlock and pull out the umbrella handle.

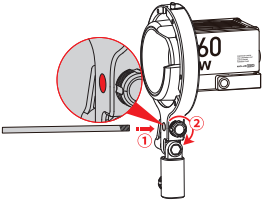

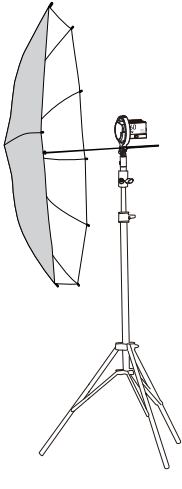

Align the 1/4" threaded hole of the extension plate with the 1/4" screw of the light stand ①. Install and tighten the extension plate to the light stand ②. Align the 1/4" threaded hole of the ZHIYUN MOLUS G60 bracket with the 1/4" threaded hole of the extension plate ③. Fix the ZHIYUN MOLUS G60 on the extension plate with the screw ④. You can connect multiple extension plates, lining them up end to end, and install a ZHIYUN MOLUS G60 on each of the extension plates. After use, you can remove ZHIYUN MOLUS G60 from the extension plate and remove the extension plate from the light stand.

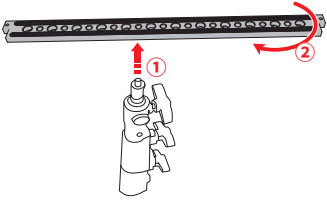

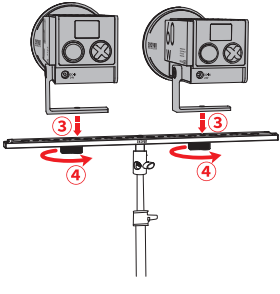

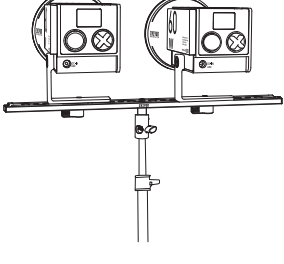

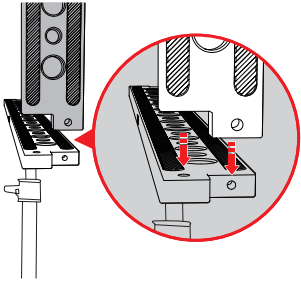

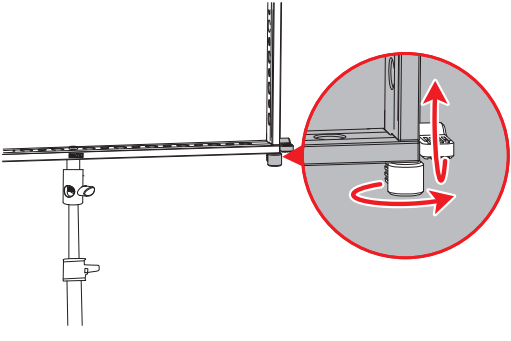

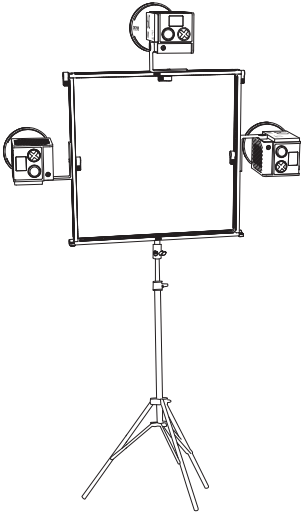

ZHIYUN extension plate is sold separately.

DO NOT stare at the chips when the device is operating.

The IP rating of the outer case is IP20.

Buttons and Knobs

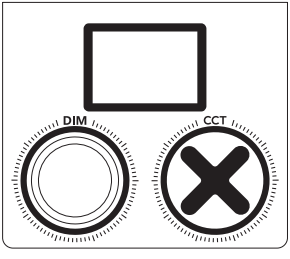

Power Button:

Long press: Power on/off

Triple press: Reset Bluetooth

Brightness Knob:

Turn clockwise: Increase brightness value.
Switch from Normal mode to Live mode (In the power-on setting interface)

Turn counterclockwise:
Decrease brightness value.
Switch from Live mode to Normal mode (In the power-on setting interface).

Single press: Quick setting of brightness.
Save setting and exit (In the power-on setting interface).

Long press: Enter/exit power-on setting interface

Color Temperature Knob

Turn clockwise: Increase color temperature value

Turn counterclockwise: Decrease color temperature value

Single press: Quick setting of color temperature

Display Screen

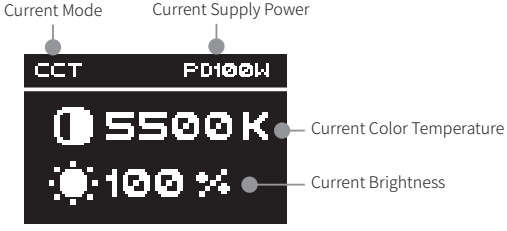

Operation Instruction

Power on ZHIYUN MOLUS G60. Single press brightness/color temperature knob for quick adjustment of brightness/color temperature. Turn the brightness/color temperature knob clockwise/counterclockwise to fine-tune brightness/color temperature value.

Power-on Setting

Normal mode: Pressing and holding the power button is required to turn on the powered ZHIYUN MOLUS G60.
Live mode: The powered ZHIYUN MOLUS G60 can be turned on without pressing any buttons.
You can customize the way to turn on ZHIYUN MOLUS G60 at the power-on setting. The default mode is Normal mode. When entering the power-on setting interface, you can turn the brightness knob to select the mode and single-press the brightness knob to save and exit the setting.

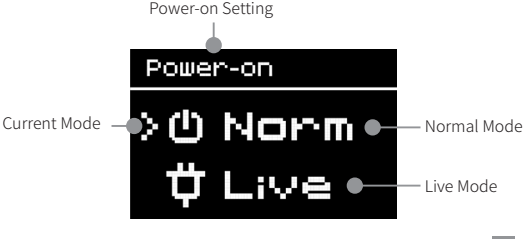

You can use “Zhiyun Gimbal Tools” to perform ZHIYUN MOLUS G60 firmware upgrade.

The steps are as follows:

1. Visit the official website of ZHIYUN (www.zhiyun-tech.com), go to the ZHIYUN MOLUS G60 product page, click "Download", find the USB driver, the calibration upgrade tool and the firmware and download. (USB drivers are not required for Mac OS systems)
2. Install the driver, and unzip the firmware for the files with the ".ptz" file extension.
3. Connect the Type-C port of ZHIYUN MOLUS G60 to the USB port of the computer with the Type-C USB cable.
4. Open "Zhiyun Gimbal Tools", click "Open", and click "Firmware Upgrade". Click "Browse" under "Path" to select the latest firmware downloaded (with the ".ptz" file extension), and click "Upgrade" at the bottom to upgrade firmware. ZHIYUN MOLUS G60 will automatically turn off when the upgrade is finished.

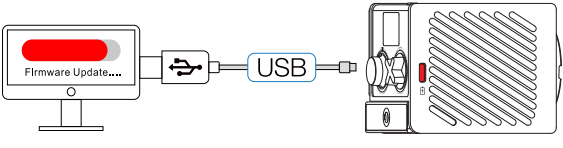

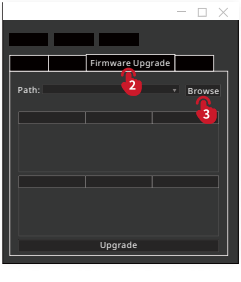

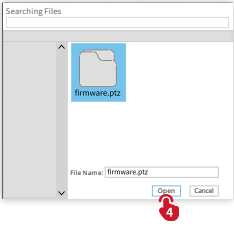
Searching Files
firmware.ptz
File Name: firmware.ptz
Open
Cancel
4

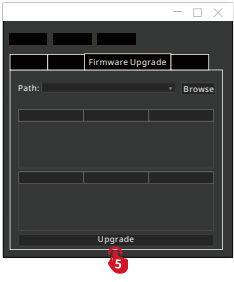
Firmware Upgrade
Path:
Browse
Upgrade
5

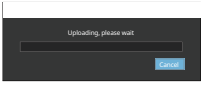
Uploading, please wait
Cancel

Product Model：PL103

Maximum Output Power	60W	
Brightness Adjustment Range	0-100%	
Color Temperature Range	2700K-6500K	
CRI/TLCI	CRI ⩾ 96 TLCI ⩾ 97	
Illuminance (maximum power, without reflector)	2428(lux)	Lab Data 1
Illuminance (maximum power, with reflector)	11729(lux)	Lab Data 2
Operation Temperature	-10°C -40°C	
Product Size (without reflector)	90.6x67x66.95mm	
Product Net Weight (without reflector)	299g	
Power Adapter Rated Output Voltage/Current	24V/3A	

Lab Data 1: The data is collected in the following conditions: No reflectors, 25°C temperature, indoor illuminance lower than 0.1lux, test distance 1m, and the color temperature is set at 6500K with 100% brightness. The illuminance is 2428 lux. The actual illuminance varies under different conditions.

Lab Data 2: The data is collected in the following conditions: Installed reflector, 25°C temperature, indoor illuminance lower than 0.1lux, test distance 1m, and the color temperature is set at 6500K with 100% brightness. The illuminance is 11729 lux. The actual illuminance varies under different conditions.

Warranty Period

1. Customers are entitled to replacement or free repair service in case of quality deficits found in the product within 15 days upon receipt of the product.
2. Customers are entitled to free repair service from ZHIYUN for any product proven defective in material or workmanship that results in product failure during normal consumer usage and conditions within the valid warranty period, which is 12 months counting from the date of selling. However, warranty period varies by product component and country of purchase. Please contact our after-sales service team on ZHIYUN official website or your place of purchase for detailed warranty information.

Warranty Exclusions

1. Products subjected to unauthorized repair, misuse, collision, neglect, mishandling, soaking, accident, and unauthorized alteration.
2. Products subjected to improper use or whose labels or security tags have been torn off or altered.
3. Products whose warranty has expired.
4. Products damaged due to force majeure, such as fire, flood, lightning, etc.

Warranty Claim Procedure

1. If failure or any problem occurs to your product after purchase, please contact a local agent for assistance, or you can always contact ZHIYUN's customer service through email at info@zhiyun-tech.com or website at www.zhiyun-tech.com.
2. Your local agent or ZHIYUN's customer service will guide you through the whole service procedure regarding any product issue or problem you have encountered. ZHIYUN reserves the right to reexamine damaged or returned products.

Customer Information			
Customer Name:		Phone Number:	
Address:			
Sales Information			
Sales date:		Product Serial Number:	
Distributor Name:			
Distributor’ s Contact Number:			
First Maintenance Record			
Service Date:		Repairman Signature:	
Cause of Problem:			
Service Result:	☐ Solved	☐ Unsolved	☐ Refunded/Replaced

Website

Weibo

Vimeo

Google+

Facebook
(Zhiyun Support)

Facebook
(Zhiyun Tech)

Youku

Youtube

Wechat

Instagram

Tel: +86 400 900 6868
USA Hotline: +1 808-319-6137,9:00-18:00 GMT-7,Mon-Fri
Europe Hotline: +49 (0) 61018132180,10:00-17:00 GMT+1,Mon-Fri
Web: www.zhiyun-tech.com
E-mail: info@zhiyun-tech.com
Address: 09 Huangtong Road, Tieshan Industrial Zone, Qixing District, Guilin, 541004, Guangxi, China

Certificate of Quality

This product is confirmed to meet quality standards and permitted for sale after strict inspection.

QC Inspector: _____ QC PASS 检02

For full product information, please visit ZHIYUN's official website: Content on www.zhiyun-tech.com is subject to update without notice.

ZHIYUN ™ is a trademark of ZHISHEN
All product names or brands referred to hereunder may be trademarks or registered trademarks of their respective holders.
Copyright © 2022 ZHISHEN. All rights reserved.

FCC Caution.

This device complies with part 15 of the FCC Rules. Operation is subject to the following two conditions: (1) This device may not cause harmful interference, and (2) this device must accept any interference received, including interference that may cause undesired operation.

Any Changes or modifications not expressly approved by the party responsible for compliance could void the user's authority to operate the equipment.

Note: This equipment has been tested and found to comply with the limits for a Class B digital device, pursuant to part 15 of the FCC Rules. These limits are designed to provide reasonable protection against harmful interference in a residential installation. This equipment generates uses and can radiate radio frequency energy and, if not installed and used in accordance with the instructions, may cause harmful interference to radio communications. However, there is no guarantee that interference will not occur in a particular installation. If this equipment does cause harmful interference to radio or television reception, which can be determined by turning the equipment off and on, the user is encouraged to try to correct the interference by one or more of the following measures:
-Reorient or relocate the receiving antenna.
-Increase the separation between the equipment and receiver.
-Connect the equipment into an outlet on a circuit different from that to which the receiver is connected.
-Consult the dealer or an experienced radio/TV technician for help.

RF Exposure:
The device has been evaluated to meet general RF exposure requirement, The device can be used in
portable exposure condition without restriction Federal Communication Commission (FCC) Radiation Exposure Statement Power is so low that no RF exposure calculation is needed.

Hereby, [Guilin Zhishen Information Technology Co., Ltd.] declares that the radio equipment type [PL103] is in compliance with Directive 2014/53/EU. The full text of the EU declaration of conformity is available at the following internet address: https://www.zhiyun-tech.com/compliances.

IC Caution.

- English: "
This device complies with Industry Canada licence-exempt RSS standard(s). Operation is subject to the following two conditions:
(1) this device may not cause interference, and
(2) this device must accept any interference, including interference that may cause undesired operation of the device."
- French:"
Le présent appareil est conforme aux CNR d'Industrie Canada applicables aux appareils radio exempts de licence. L'exploitation est autorisée aux deux conditions suivantes :
(1) l'appareil nedoit pas produire de brouillage, et
(2) l'utilisateur de l'appareil doit accepter tout brouillage radioélectrique subi, même si le brouillage est susceptible d'en compromettre le fonctionnement."

This equipment complies with IC radiation exposure limits set forth for an uncontrolled environment.

Cet équipement est conforme aux limites d'exposition aux radiations de la IC définies pour un environnement non contrôlé.

ZHIYUN-TECH.COM