The following features are available in this PDF document.

Quick Keyword Search

Enter the keyword in the search box and hit the search button

Quick Jump between Chapters

Click the title of a specific chapter on the Contents to jump to it

*Reading software such as Adobe Reader is needed to support the functions above.

ZHIYUN-EN-v1.00

ZHIYUN MOLUS X200 COB Light

User Guide

Contents

☐ Product Overview

Product Overview · 1

☐ Product List

Getting to Know the ZHIYUN MOLUS X200 COB Light · · · · 5

☐ Getting to Know the ZHIYUN MOLUS X200 COB Light (the "X200")

☐ Power Supply Instructions

Power Supply Instructions · · · · · · · · · · · · · · · · · · 6

☐ Installing and Removing the Adjustable Bracket (the "Bracket")

☐ Installing and Removing the Reflector

Installing the Reflector · · · · · · · · · · · · · · · · · · · 10

Removing the Reflector · · · · · · · · · · · · · · · · · · · 10

☐ Installing and Removing the ZHIYUN MOLUS Mini Standard Cover (the "Standard Cover")

Installing the Standard Cover · · · · · · · · · · · · · · · 11

Removing the Standard Cover · · · · · · · · · · · · · · · 12

☐ Installing the Tripod

☐ Installing the Light Stand

☐ Installation and Use of the ZHIYUN Multi-Functional Battery Expansion Hub (hereinafter referred to as "Expansion Hub")

Getting to Know the Expansion Hub · · · · · · · · · · · · 15

Installing the Expansion Hub · · · · · · · · · · · · · · · · 16

Removing the Expansion Hub · · · · · · · · · · · · · · · · 17
Expansion Hub Usage Instructions · · · · · · · · · · · · · · 18
Description of Expansion Hub Status Indicators · · · · · · · · 20

☐ How to Use the X200
Button and Knob Descriptions · · · · · · · · · · · · · · · · 21
Instructions · 22

☐ Firmware Upgrade

☐ Product Specifications

☐ Disclaimer and Warnings
Reading Tips · 30
Safe Operation Instructions · · · · · · · · · · · · · · · · · 30

☐ Warranty Card
Warranty Period · 31
Warranty Exclusions · 31
Warranty Claim Procedure · · · · · · · · · · · · · · · · · · 31

☐ Contact Card

Product Overview

ZHIYUN MOLUS X200 COB Light is a high-power, high-illuminance, and portable fill light that supports brightness and color temperature adjustment. It is compact and has excellent performance. Supporting multiple power supply solutions, ZHIYUN MOLUS X200 COB Light can work with a variety of light control accessories to meet the fill light needs in indoor and outdoor shooting scenes.

Product highlights are as follows:

1. Lightweight, portable, and easy-to-use
2. Brightness and color temperature adjustment, suitable for a wide range of applications
3. High power, high brightness, and strong fill light performance
4. High color rendering performance, reflecting the original color of objects
5. Rich, creative lighting effects, easily delivering imaginative shooting scenes
6. Comprehensive accessory support for diverse light control needs
7. Bluetooth mesh networking, app/DMX remote dimming, and more efficient light control
8. Multiple power supply options for longer work time

Warning

- This product is not waterproof. Do not expose the product to any liquids. Do not use this product in the rain or humid environments.
- If water accidentally enters the product during use, stop using it immediately and contact us or authorized maintenance personnel. You may continue to use it only after the product is repaired.
- It is strictly forbidden to use this product in places with corrosive chemicals, flammable, or explosive materials.
- To avoid burns, do not touch the heating components when using this product.
- Do not wrap or block the heat dissipation holes. Otherwise, the heat dissipation performance may be affected.
- To avoid visual impairment, it is strictly forbidden to stare at the luminous LED of this product.
- Do not use this product in environments exceeding 40° C.

Miscellaneous

1. This product is a high-precision control device. Damage may be caused if it is dropped or is subject to external force, and this may result in device malfunctioning.
2. Keep your hands dry when using this product. It is recommended to use a soft, dry cloth to clean it.
3. Keep this product out of reach of children.
4. If the product is not in use, disconnect the external power supply.
5. The included AC cable is dedicated to this product. Do not use it for other purposes.
6. To avoid causing damage, do not place any other items on this product.
7. Protect this product from dust and sand during use.
8. Before storing this product, ensure that it has completely cooled. Store it in a dry and well-ventilated place.
9. It is strictly forbidden to disassemble this product without authorization. If a malfunction occurs, it must be repaired by ZHIYUN or ZHIYUN's authorized maintenance personnel.

Product List

The product package comes with the following items. If there are any missing items, please contact ZHIYUN or your local distributor.

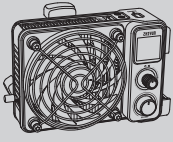	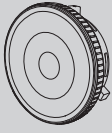
Master unit x 1	Reflector x1
Adjustable bracket x 1	ZHIYUN V-Mount Power Adapter x 1
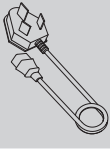	
AC power cable x 1	ZHIYUN Extension Pole x 1*
	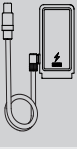
ZHIYUN Multi-Functional Battery Expansion Hub x 1*	Expansion hub power supply cable x 1*

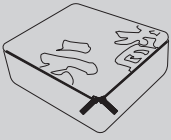

Portable bag x1

"*" indicates that the ZHIYUN MOLUS X200 COB Light COMBO Kit includes this accessory.

Getting to Know the ZHIYUN MOLUS X200 COB Light

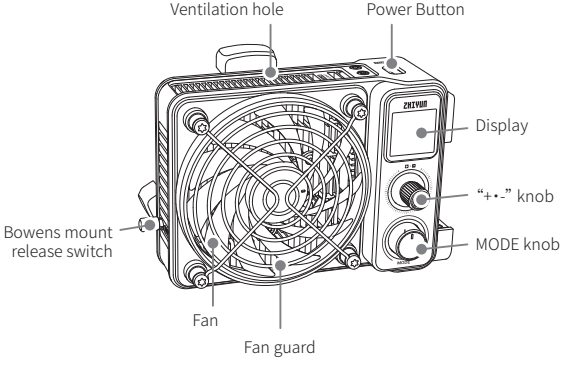

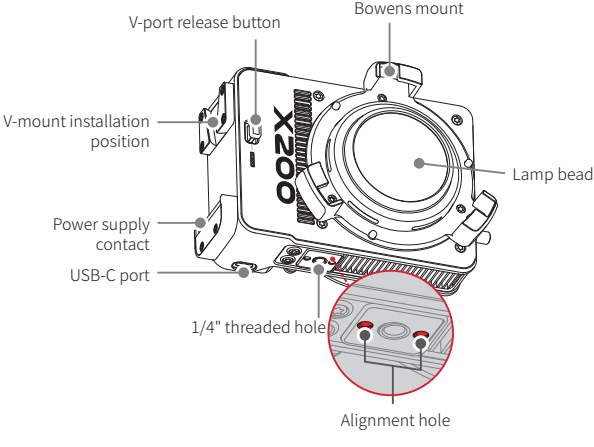

Power Supply Instructions

This product does not contain batteries. To ensure the normal operation of the X200, provide the power supply in either of the following methods:

① **ZHIYUN V-Mount Power Adapter:** Install the ZHIYUN V-Mount Power Adapter onto the X200. Connect the ZHIYUN V-Mount Power Adapter to the AC power outlet through the AC power cable to power the X200.

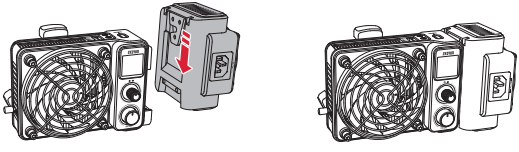

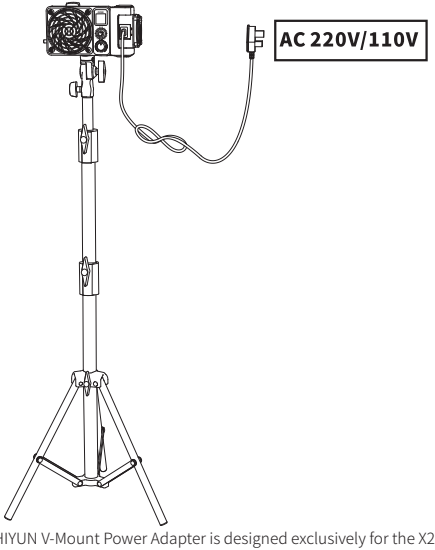

⚠ The ZHIYUN V-Mount Power Adapter is designed exclusively for the X200. Do not connect it to other devices to avoid damage.

② **USB adapter:** Use a USB Type-C charging cable to connect the USB adapter to the X200's USB-C port, then plug the USB adapter into an AC power socket to supply power. The USB power delivery level will be displayed on the screen in real time. The maximum supported USB power delivery for the X200 is 140 W, with brightness adjustable up to 70%.

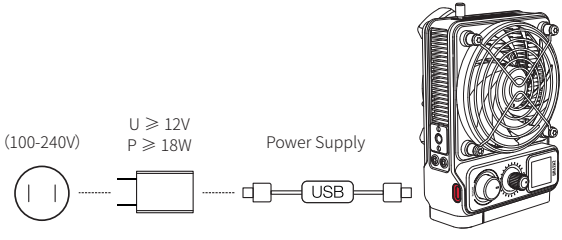

USB charging cable and USB adapter not included.

③ **V-mount battery:** Install the V-mount battery onto the X200 to power the X200, as shown in the figure below.

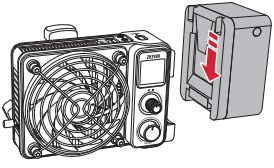

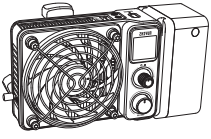

① It is recommended to use a V-mount battery with an output power greater than 150 W.

② V-mount batteries not in cluded.

③ When the X200 is not in use, remove the V-mount battery from the lamp body.

To remove the V-mount battery from the X200, press and hold the V-mount release button first.

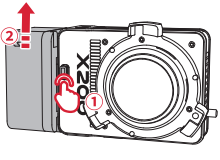

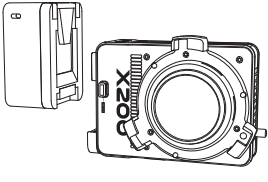

The X200 supports the use of third-party V-mount batteries for power supply, which is subject to the actual connection.

Installing and Removing the Adjustable Bracket (the "Bracket")

Align the 1/4 screw at the top of the bracket with the 1/4 screw hole at the bottom of the X200, and align the positioning pin at the top of the bracket with the positioning hole at the bottom of the X200. Then, install the bracket onto the X200 and rotate the bracket locking screw in the direction shown in the figure until the bracket is fully fixed. To remove the bracket from the X200, rotate the bracket locking screw in the opposite direction.

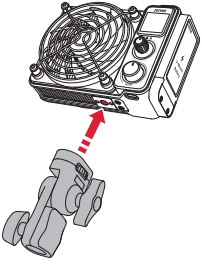

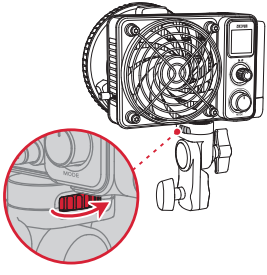

Installing the Reflector

Align the Reflector mount with the X200's Bowens mount, and install the Reflector onto the X200. Press the Reflector into the Bowens mount, and at the same time, rotate the lens in the direction shown in the figure until you hear a "click" sound. The Bowens mount release button will be automatically locked.

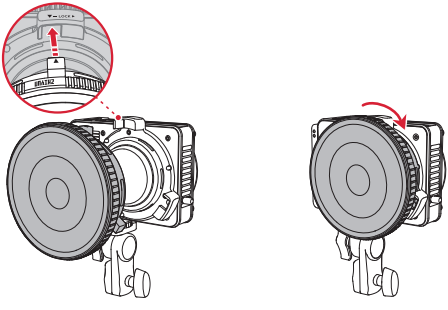

① The Reflector is customized for the X200RGB/X200 and is not suitable for other fixtures.

② The Reflector can brighten the X200 light several times and make the light transition smooth.

Removing the Reflector

Press and hold the Bowens mount release button ① , rotate the Reflector in the indicated direction ② , and then remove the Reflector from the X200.

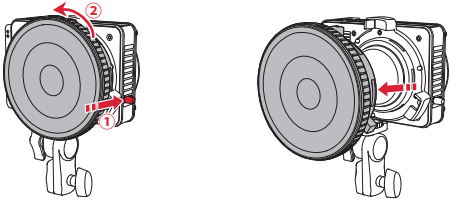

Installing the Standard Cover

Align the mount of the standard cover with the Bowens mount of the X200, and install the standard cover onto the X200. Press the standard cover into the Bowens mount, and rotate the standard cover in the direction shown in the figure until you hear a "click" sound. The Bowens mount release button will be automatically locked.

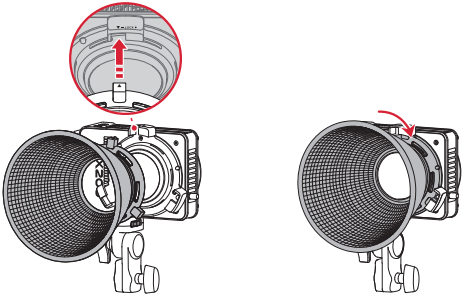

① The standard cover is customized for the X200RGB/X200 and is not suitable for other fixtures.

② Compared with the common standard cover for Bowens mounts on the market, this standard cover is more compact and provides a softer light transition after focusing.

Removing the Standard Cover

Press and hold the Bowens mount release button ① , rotate the standard cover in the indicated direction ② , and then remove the standard cover from the X200.

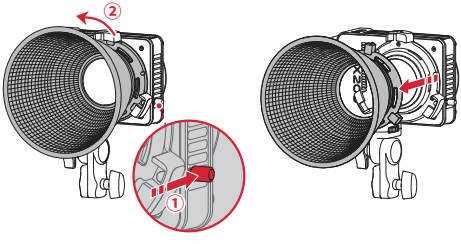

The standard cover needs to be purchased separately.

Installing the Tripod

Align the tripod's 1/4 screw with the 1/4 screw hole at the bottom of the X200 and tighten it.

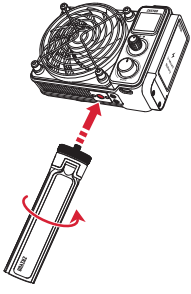

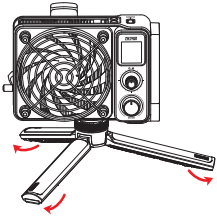

The tripod needs to be purchased separately.

Installing the Light Stand

Align the end of the bracket with the 1/4 screw at the top of the light stand ① . Install the X200 and the bracket assembly onto the light stand and tighten the bracket locking device ② . Loosen the bracket shaft locking screw ③ , adjust the light angle as required ④ , and finally tighten the bracket shaft locking screw ⑤ .

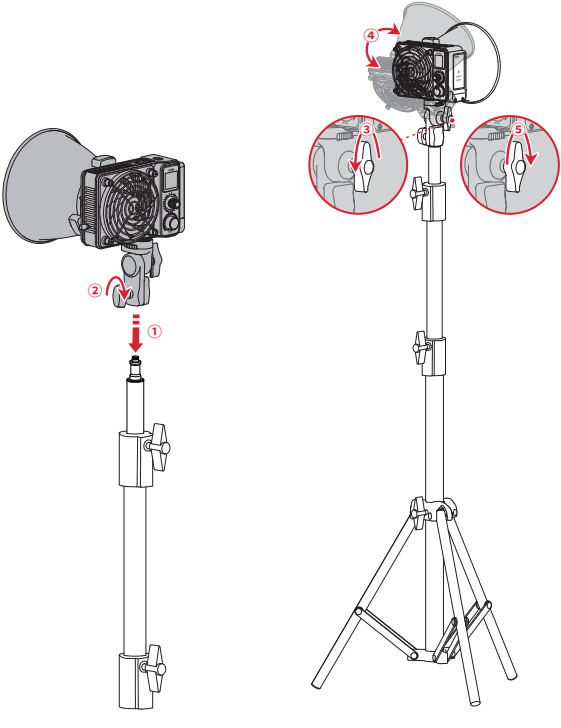

① The light stand neds to be purchased separately.
② If a Bowens mount softbox is also used, the softbox diameter should be less than or equal to 90 cm, and the weight should be less than or equal to 1.6 kg.

Getting to Know the Expansion Hub

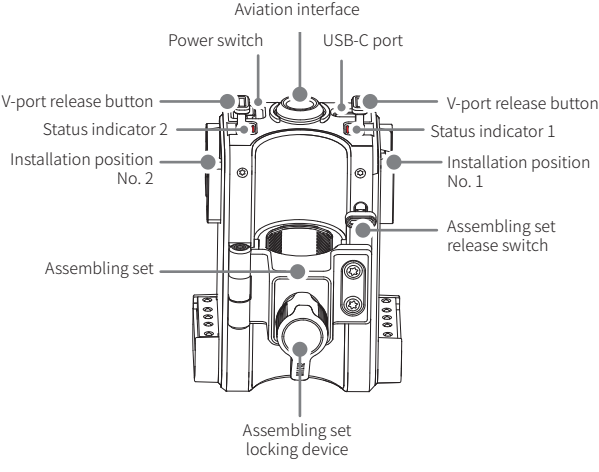

Installing the Expansion Hub

Loosen the expansion hub locking device ① , press and hold the assembling set release button ② , and turn the assembling set ③ as shown in the figure to release it. Install the expansion hub onto the ZHIYUN Extension Pole and close the assembling set. The assembling set will automatically lock ④ . Tighten the expansion hub locking wrench to prevent the expansion hub from sliding on the extension pole ⑤ . Install two V-Mount batteries simultaneously into the V-Mount slots on both sides of the expansion hub ⑥ . Align the 1/4" threaded hole at the bottom of the X200 with the 1/4-inch screw at the top of the extension pole ⑦ . Rotate the X200 in the direction shown to mount it onto the extension pole ⑧ . Finally, connect the expansion hub power cable to the expansion hub ⑨ and the X200 ⑩ .

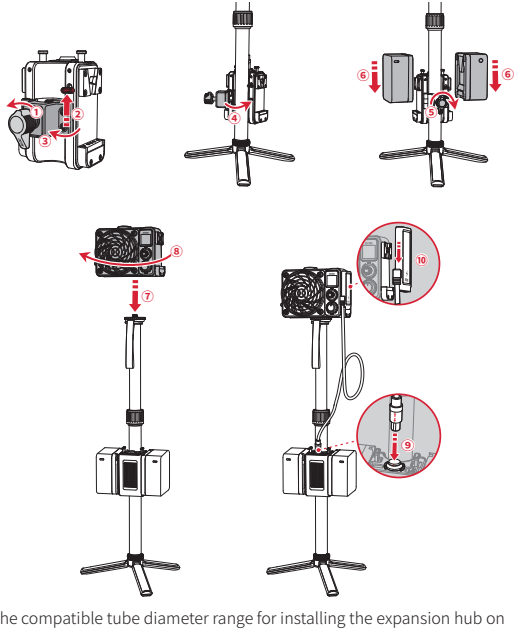

The compatible tube diameter range for installing the expansion hub on extension poles/light stands is 25–30 mm.

Removing the Expansion Hub

Press and hold the V-mount release button of the X200 ① , and push the expansion hub power cable base upward to remove it ② . Pull the cable at the expansion hub end upward ③ , press and hold the V-mount release button on the left/right side of the expansion hub downward ④ , and push the left/right V-mount battery upward ⑤ . Loosen the locking device of the expansion hub assembling set ⑥ in the direction shown in the figure. Press and hold the release button of the assembling set ⑦ , and turn the assembling set in the indicated direction to remove the expansion hub from the extension pole ⑧ . Turn the assembling set ⑨ in the manner shown in the figure to fix it in position.

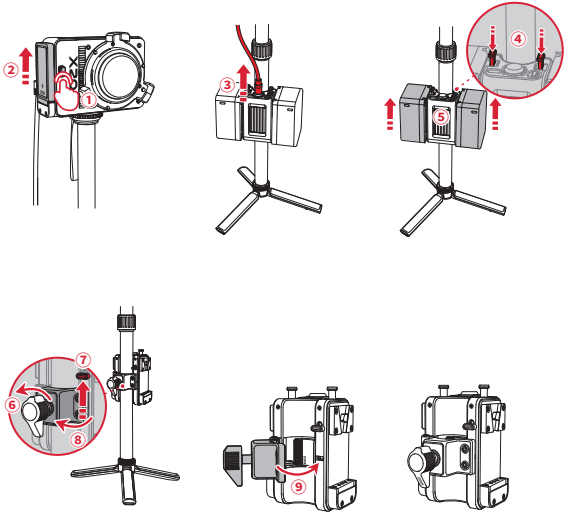

Expansion Hub Usage Instructions

Install two V-mount batteries onto the ZHIYUN Multi-Functional Battery Expansion Hub. Then, connect the expansion hub to the X200 through the expansion hub power cable. Turn on the expansion hub, as shown in the figure below, to power the X200.

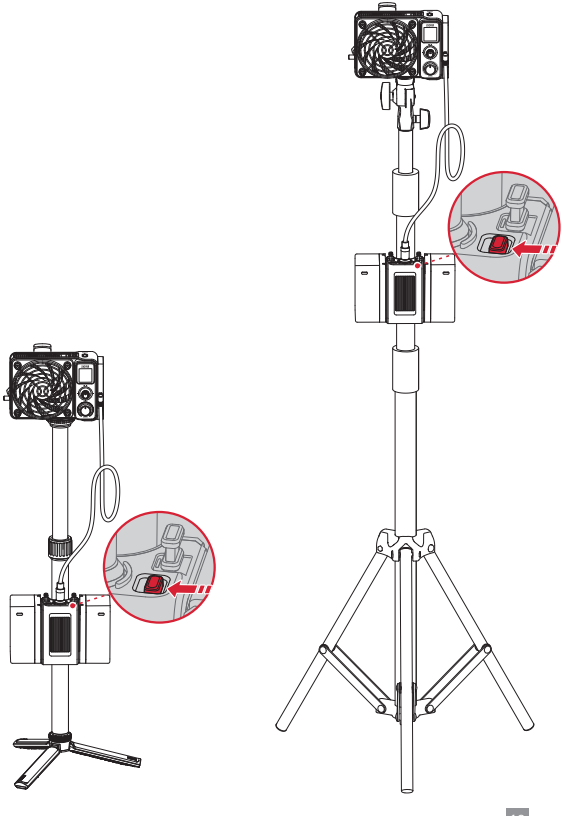

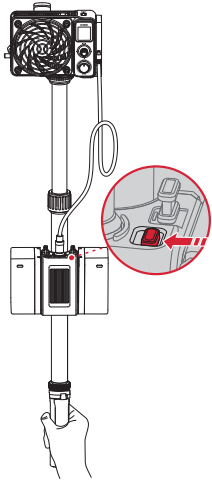

① It is recommended to use two V-Mount batteries with the same capacity (14.4V/15A) for power supply. Each V-Mount battery should have a capacity of ≥ 99 Wh.

② The power connector of the expansion hub's power cable is exclusively for supplying power to the X200 . Do not connect it to the V-Mount slots on either side of the expansion hub or to other devices to avoid damage.

③ The USB-C port on the expansion hub can only be powered by the V-mount battery in Slot 1 and supports power output only, with a maximum output of 100 W.

④ The USB port and aviation connector cannot output power simultaneously.

⑤ When only one V-mount battery is installed in the expansion hub to power the X200, be sure to install the V-mount battery in installation position No. 1.

⑥ When the X200 is not in use, turn off the power switch of the expansion hub to save energy.

⚠ Do not connect power supply devices to the USB-C port or aviation connector of the expansion hub to avoid damaging the expansion hub.

Description of Expansion Hub Status Indicators

When the expansion hub power switch is off, status indicators 1 and 2 are both turned off. When the power switch is on, the indicator light status is displayed based on the installed battery as follows:

Battery Installation Status		Indicator Light Status		Note
Installation position No. 1	**Installation position No. 2**	**Status indicator 1**	**Status indicator 2**	
V-mount battery (14.4V/15A)	V-mount battery (14.4V/15A)	White steady light	White steady light	
V-mount battery (14.4V/15A)	/	White steady light	off	
V-mount battery (26V/8.5A)	/	White steady light	off	
/	V-mount battery (14.4V/15A)	White light flashes twice	off	When using a single V-mount battery for power supply, install it in Slot 1.
/	V-mount battery (26V/8.5A)	White light flashes twice	off	
V-mount battery (26V/8.5A)	V-mount battery (14.4V/15A)	White steady light	off	
V-mount battery (14.4V/15A)	V-mount battery (26V/8.5A)	White steady light	off	
V-mount battery (26V/8.5A)	V-mount battery (26V/8.5A)	White steady light	off	

① For a single installed V-Mount battery, the input voltage should not exceed 32 V. If the input voltage exceeds 32 V, status indicators 1 and 2 will flash three times simultaneously.

② When the input voltage of a V-Mount battery (14.4V/15A) in a single slot is below 13.5 V, the status indicator light for that slot flashes slowly.

③ When the input voltage of a V-Mount battery (26V/8.5A) in a single slot is below 23.7 V, Status Indicator Light 1 flashes slowly, and Status Indicator Light 2 turns off.

It is strictly forbidden to stare at the luminous LED of the X200 while it is working.

The enclosure protection rating of the X200 is IP20.

Button and Knob Descriptions

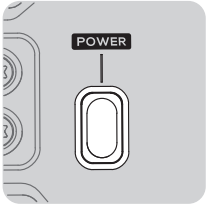

Press and hold the power button + rotate the MODE knob:
Power on (using the V-mount battery or the expansion hub power supply).
Press and hold the power button:
Power on (powered by a USB/V-mount power adapter)/power off
Press the power button: Rotate the screen by 90°
Press the power button three times:
Reset the Bluetooth

"+• -" knob:
Press: Quickly adjust the current parameters.
Confirm (submenu)
Rotate: Adjust the current parameters

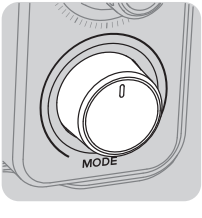

MODE knob:
Press: Switch the work mode.
Return to the previous menu.
Press twice: Switch to the previous work mode.
Rotate: Switch the option (on the dimming interface).
Switch the menu (on the menu interface).
Press and hold: Enter/exit the menu interface.

Instructions

1. Color Temperature Mode Settings (CCT)

Press the **MODE knob** to switch to the color temperature mode, and rotate the **MODE knob** to switch to the color temperature/brightness option. Press/rotate the **"+• -" knob** to adjust the values.

Brightness range: 0%-100%

Color temperature range: 2700 K-6500 K

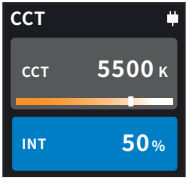

2. Special Effects Mode Settings (FX)

Press the **MODE knob** to switch to special effects mode, and rotate the **MODE knob** to switch the special effect type. Press the **"+• -" knob** to enter the special effect parameter interface. Rotate the **MODE knob** to switch parameter options, and press/rotate the **"+• -" knob** to adjust the values.

Effect type: Explosion, flame, paparazzi, broken light bulb, TV, lightning, flash, welding, color temperature breathing, color temperature cycling

Brightness range: 0%-100%

Color temperature range: 2700 K-6500 K

Speed range: 1-5

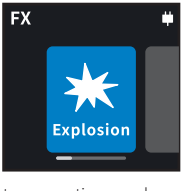

① The adjustable parameter properties vary depending on the special effect types. However, the operation methods are the same. Here, the explosion special effect is used as an example for illustration.

② The parameter value for a single special effect is only valid within the current special effect.

3. Menu Settings (MENU)

Press and hold the **MODE knob** to enter the menu setting interface.

5.1) Studio Mode Settings

Rotate the **MODE knob** to switch to the studio mode option. Press the **"+• -" knob** to enter the setting interface, and then press the **"+• -" knob** to enable/disable the studio mode.

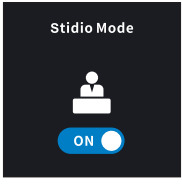

① Studio mode on: The X200 powers on immediately after being connected to the power supply. No additional operation is required.

② The studio mode can only take effect when the X200 is powered by the ZHIYUN V-Mount Power Adapter or expansion hub.

③ When the ZHIYUN V-Mount Power Adapter or expansion hub is powered and the studio mode is enabled, press and hold the power button to shut down the X200 and disconnect the power. After reconnecting the power, press and hold the power button to turn it on again.

5.2) Dimming Curve Settings

Rotate the **MODE knob** to switch to the dimming curve option. Click the **"+• -" knob** to enter the setting interface, rotate the **MODE knob** to switch to the desired dimming curve type, and press the **"+• -" knob** for confirmation.

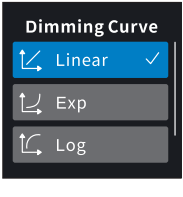

5.3) Control System Settings

Bluetooth Reset

Rotate the **MODE knob** to switch to the control system option. Press the **"+• -" knob** twice to enter the setting interface. and then press the **"+• -" knob** to enter the Bluetooth resetting interface. Rotate the **MODE knob** to select Yes or No, and press the **"+• -" knob** for confirmation.

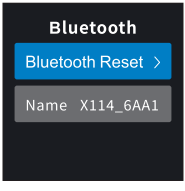

5.4) Language Settings

Rotate the **MODE knob** to switch to the language setting option. Press the **"+• -" knob** to enter the setting interface. Rotate the **MODE knob** to select the desired language type, and press the **"+• -" knob** for confirmation.

5.5) Product Information

Rotate the **MODE knob** to switch to the product information option. Press the **"+• -" knob** to enter the product information interface, where you can view information such as product name, device model, and firmware version.

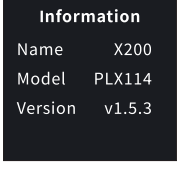

5.6) Factory Reset

Rotate the **MODE knob** to switch to the factory reset option. Press the **"+• -" knob** to enter the setting interface. Rotate the **MODE knob** to select Yes or No, and press the **"+• -" knob** for confirmation.

You can use the "Zhiyun Led Tools" or the "ZY Vega" app to upgrade the X200 firmware. Method 1:

1. Visit the ZHIYUN official website at www.zhiyun-tech.com. On the X200 product page, find the "Download" page, and download the ZHIYUN upgrade tool and firmware.
2. Decompress the firmware package to obtain a file with the extension "ptz".
3. Use a USB Type-C data cable to connect the USB-C port of the X200 to the USB port of the computer.
4. Open the "Zhiyun Led Tools", then click "Open" at the top of the tool. Click "Browse" under "Path" to select the latest firmware file downloaded (with the .ptz extension). Finally, click "Upgrade" at the bottom of the tool to enter the upgrade mode. After a successful upgrade, the X200 will be automatically turned off.

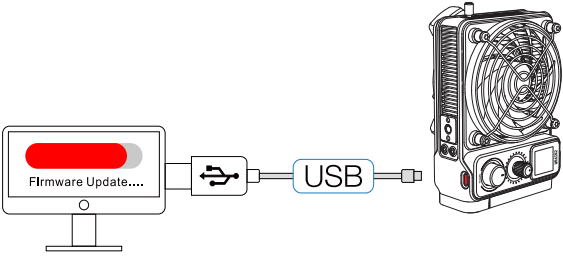

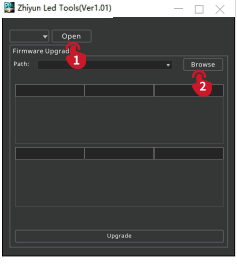

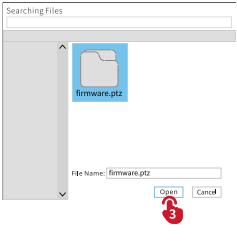

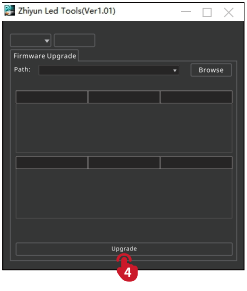

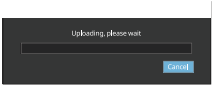

Method 2:

You can use the "ZY Vega" app to upgrade the X200 firmware. For more operation steps, visit the ZHIYUN official website at www.zhiyun-tech.com to watch the X200 video tutorials.

① If you adopt Method 1, wait until the display shows that update is successful before unplugging the USB Type-C data cable.

② Before upgrading the firmware, please ensure that the X200 has more than 50% power remaining. During the upgrade process, do not exit the app interface or switch to the background. Please pay attention to the prompts on the app.

Product model: PLX114

Power	209W	
Dimming range	0%-100%	
Color temperature range	2700K-6500K	
Color Rendering Index (CRI/TLCI)	CRI ≈ 95 TLCI ≈ 97	
CQS	≈ 96	
SSI(D32)	83	
SSI(D56)	73	
TM-30 Rg	100 ± 3	
TM-30 Rf	＞ 94	
Illuminance (maximum power, bare light)	8900(lux)	Experimental data 1
Illuminance (maximum power, with lens)	19000(lux)	Experimental data 2
ZHIYUN V-Mount Power Adapter Operating Voltage	AC 100V/240V (50-60Hz)	
ZHIYUN V-Mount Power Adapter Maximum Input Power	250W	
ZHIYUN V-Mount Power Adapter Maximum Output Power	225W(36V/6.25A)	
ZHIYUN Multi-Functional Expansion Hub Input Voltage	14.4V/15A 26V/8.5A	
ZHIYUN Multi-Functional Expansion Hub Output Power	USB-C port: 100 W Aviation connector: 200 W	

USB power/voltage	P ⩾ 18W, U ⩾ 12V	
Lamp body V-Mount Input Voltage	12-36V	
Control Method	Device Control / App Bluetooth Control	
Operating environment temperature	-10°C -40°C	
Product dimensions (bare unit)	165*115*82mm	L*W*H
ZHIYUN V-mount power adapter size	111*85.3*64.5mm	L*W*H
ZHIYUN Multi-Functional Battery Expansion Hub Dimensions	137*59*34.5mm	L*W*H
Product net weight (bare unit)	800g	
Net weight of ZHIYUN V-Mount Power Adapter	320g	
ZHIYUN Multi-Functional Battery Expansion Hub Net Weight	394g	

Experimental data 1: The data is obtained under the conditions of an ambient temperature of 25°C, indoor brightness below 0.1 lux, a test distance of 1 m, an X200 color temperature of 5500 K, a brightness of 100%, and no lens. The illuminance is 8900 (lux), and the actual illuminance of the X200 will vary depending on the ambient brightness.

Experimental data 2: The data is obtained under the conditions of an ambient temperature of 25°C, indoor brightness below 0.1 lux, a test distance of 1 m, an X200 color temperature of 5500 K, a brightness of 100%, and with lens. The illuminance is 19000 (lux), and the actual illuminance of the X200 will vary depending on the ambient brightness.

All the data in this guide was gathered from internal experiments from ZHIYUN's laboratories. The data may differ to some extent under different scenarios so please refer to the actual use of the X200.

Thank you for purchasing this product. The information contained herein affects your safety, legitimate rights and obligations. Please read this instruction carefully to ensure proper configuration before use. Failure to read and follow this instruction and warnings herein may result in serious injury to you or bystanders, or damage to your device or property. Guilin Zhishen Information Technology Co., Ltd (hereinafter referred to as "ZHIYUN") reserves all rights for final explanation of this instruction and other documents related to this product. The information is subject to update without notice. Please visit www.zhiyun-tech.com to obtain the latest product information.

By using this product, you hereby signify that you have read this document carefully and that you understand and agree to abide by the terms and conditions herein. You agree that you are solely responsible for your own conduct while using this product, and for any consequences thereof. You agree to use this product only for purposes that are proper and in accordance with all terms, precautions, practices, policies and guidelines ZHIYUN has made and may make available.

ZHIYUN accepts no liability for damage, injury or any legal responsibility incurred directly or indirectly from the use of this product. Users shall observe safe and lawful practices including, but not limited to, those set forth herein.

ZHIYUN ™ is the trademark of Guilin Zhishen Information Technology Co., Ltd and its affiliates. All product names or trademarks referred to herein are trademarks or registered trademarks of their respective holders.

Reading Tips

Legends: Hints and Tips Important

Safe Operation Instructions

Read the ENTIRE User Guide to become familiar with the features of this product before operating. Failure to operate the product correctly can result in damage to the product or personal property and cause serious injury. This is a sophisticated product. It must be operated with caution and common sense and requires some basic mechanical ability. Failure to operate this product in a safe and responsible manner could result in injury or damage to the product or other property. This product is not intended for use by children without direct adult supervision.
DO NOT use with incompatible components or in any way otherwise as mentioned or instructed in the product documents provided by ZHIYUN. The safety guidelines herein contain instructions for safety, operation and maintenance. It is essential to read and follow all of the instructions and warnings in the User Guide, prior to assembly, setup or use, in order to operate the product correctly and avoid damage or serious injury.

Warranty Period

1. Customers are entitled to replacement or free repair service in case of quality deficits found in the product within 15 days upon receipt of the product.
2. Customers are entitled to free repair service from ZHIYUN for any product proven defective in material or workmanship that results in product failure during normal consumer usage and conditions within the valid warranty period, which is 12 months counting from the date of selling. However, warranty period varies by product component and country of purchase. Please contact our after-sales service team on ZHIYUN official website or your place of purchase for detailed warranty information.

Warranty Exclusions

1. Products subjected to unauthorized repair, misuse, collision, neglect, mishandling, soaking, accident, and unauthorized alteration.
2. Products subjected to improper use or whose labels or security tags have been torn off or altered.
3. Products whose warranty has expired.
4. Products damaged due to force majeure, such as fire, flood, lightning, etc.

Warranty Claim Procedure

1. If failure or any problem occurs with your product after purchase, please contact a local authorized dealer for assistance, or you can always contact ZHIYUN's customer service through email at info@zhiyun-tech.com or website at www.zhiyun-tech.com.
2. Your local authorized dealer or ZHIYUN's customer service will guide you through the whole service procedure regarding any product issue or problem you have encountered. ZHIYUN reserves the right to reexamine damaged or returned products.

Customer Information			
Customer Name:		Phone Number:	
Address:			
Sales Information			
Sales date:		Product Serial Number:	
Distributor Name:			
Distributor's Contact Number:			
First Maintenance Record			
Service Date:		Repairman Signature:	
Cause of Problem:			
Service Result:	☐ Solved	☐ Unsolved	☐ Refunded/Replaced

Website

Weibo

Vimeo

Google+

Facebook
(Zhiyun Support)

Facebook
(Zhiyun Tech)

Youku

Youtube

WeChat

Instagram

Contact Card

Tel: +86 400 900 6868
USA Hotline: +1 808-319-6137,9:00-18:00 GMT-7,Mon-Fri
Europe Hotline: +49 (0) 61018132180,10:00-17:00 GMT+1,Mon-Fri
Web: www.zhiyun-tech.com
E-mail: info@zhiyun-tech.com
Address: 09 Huangtong Road, Tieshan Industrial Zone, Qixing District, Guilin, 541004, Guangxi, China

Certificate of Quality

This product is confirmed to meet quality standards and permitted for sale after strict inspection.

QC Inspector: _____ QC PASS 检 02

For full product information, please visit ZHIYUN's official website: Content on www.zhiyun-tech.com is subject to update without notice.

ZHIYUN ™ is a trademark of ZHISHEN
All product names or brands referred to hereunder may be trademarks or registered trademarks of their respective holders.
Copyright © 2025 ZHISHEN. All rights reserved.

FCC Statement

This equipment has been tested and found to comply with the limits for a Class B digital device, pursuant to part 15 of the FCC Rules. These limits are designed to provide reasonable protection against harmful interference in a residential installation. This equipment generates, uses and can radiate radio frequency energy and, if not installed and used in accordance with the instructions, may cause harmful interference to radio communications. However, there is no guarantee that interference will not occur in a particular installation. If this equipment does cause harmful interference to radio or television reception, which can be determined by turning the equipment off and on, the user is encouraged to try to correct the interference by one or more of the following measures:

- Reorient or relocate the receiving antenna.
- Increase the separation between the equipment and receiver.
- Connect the equipment into an outlet on a circuit different from that to which the receiver is connected.
- Consult the dealer or an experienced radio/TV technician for help.

Caution: Any changes or modifications to this device not explicitly approved by manufacturer could void your authority to operate this equipment.
This device complies with part 15 of the FCC Rules.
Operation is subject to the following two conditions: (1) This device may not cause harmful interference, and (2) this device must accept any interference received, including interference that may cause undesired operation.

FCC Radiation Exposure Statement:
This equipment complies with FCC radiation exposure limits set forth for an uncontrolled environment. This equipment should be installed and operated with minimum distance 20cm between the radiator & your body

- English: "

This device complies with Industry Canada licence-exempt RSS standard (s). Operation is subject to the following two conditions:

(1) this device may not cause interference, and

(2) this device must accept any interference, including interference that may cause undesired operation of the device."

- French:"

Le présent appareil est conforme aux CNR d'Industrie Canada applicables aux appareils radio exempts de licence. L'exploitation est autorisée aux deux conditions suivantes :

(1) l'appareil nedoit pas produire de brouillage, et

(2) l'utilisateur de l'appareil doit accepter tout brouillage radioélectrique subi, même si le brouillage est susceptible d'en compromettre le fonctionnement."

MODIFICATION: Any changes or modifications not expressly approved by the grantee of this device could void the user's authority to operate the device.

Toute modification non approuvé explicitement par le fournisseur de licence de l' appareil peut entraîner l' annulation du droit de l' utilisateur à utiliser l' appareil.

IC Radiation Exposure Statement:

This equipment complies with IC radiation exposure limits set forth for an uncontrolled environment. This equipment should be installed and operated with minimum distance 20cm between the radiator & your body.

Déclaration d' exposition au rayonnement IC:

Cet équipement est conforme aux limites d' exposition au rayonnement IC fixées pour un Environnement non contrôlé. Cet équipement doit être installé et exploité Avec une distance minimale de 20cm entre le radiateur et votre corps.

ZHIYUN-TECH.COM