承　　認　　書
SPECIFICATION FOR APPROVAL

客戶名稱
CUSTOMER ：

客戶料號
CUSTOMER'S P/N ：

料號
PART NUMBER ： WAN3216F245H08

規格
DESCRIPTION ： Chip Antenna 3216 L Ant 2.45G Type H08

版本
VERSION ： V1.1

日期
ISSUE DATE ： 2020/02/27

客 戶 承 認 CUSTOMER APPROVED

工　程　部 R&D CENTER		
承　認 APPROVAL	確　認 CHECKED	製　作 DRAWN
Ray	Tennyson	Snow

萬誠科技股份有限公司
11261 台北市北投區立功街 151 號 1 樓
電話: (02) 2898-2220
傳真: (02) 2898-5055

OneWave Electronic Co., Ltd.
1F, No. 151, Li Gong Street, Beitou District,
Taipei City 11261, Taiwan
TEL: +886 2 2898-2220
FAX: +886 2 2898-5055

3216 Chip antenna

For Bluetooth / WLAN Applications

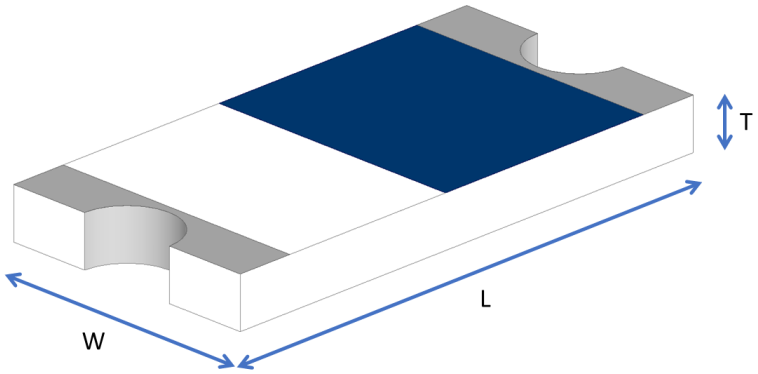

P/N: WAN3216F245H08

	Dimension (mm)
L	3.23 ± 0.20
W	1.66 ± 0.20
T	0.45 ± 0.20

Part Number Information

WAN	3216	F	245	H	08
A	B	C	D	E	F

A	Product Series	Antenna
B	Dimension L x W	3.2 x 1.6mm (±0.2mm)
C	Material	High K material
D	Working Frequency	2.4 ~ 2.5GHz
E	Feeding mode	PIFA & Single Feeding
F	Antenna type	Type = 08

1. Electrical Specification

Specification		
Part Number	WAN3216F245H08	
Central Frequency	2450	MHz
Bandwidth	120 (Min.)	MHz
Return Loss	-6.5 (Max)	dB
Peak Gain	3.3	dBi
Impedance	50	Ohm
Operating Temperature	-40～+110	℃
Maximum Power	4	W
Resistance to Soldering Heats	10 (@ 260℃)	sec.
Polarization	Linear	
Azimuth Beamwidth	Omni-directional	
Termination	Ni / Au (Leadless)	

Remark : Bandwidth & Peak Gain was measured under evaluation board of next page

2. Recommended PCB Pattern
Evaluation Board Dimension

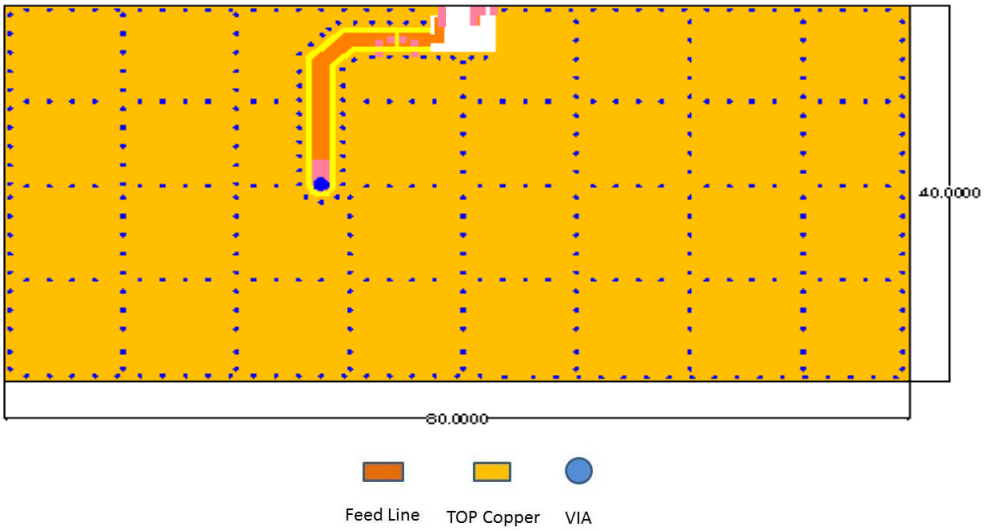

2nd Evaluation Board Dimension

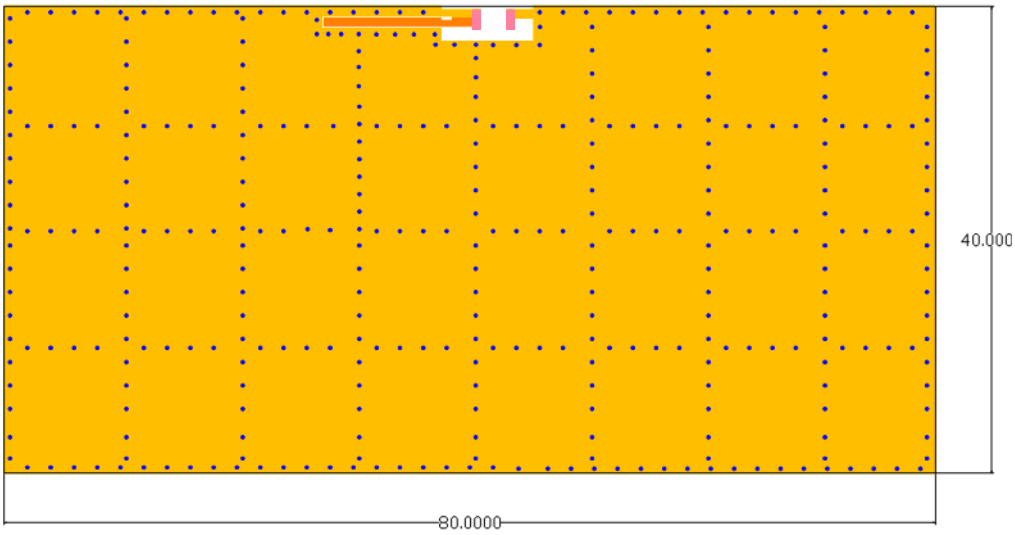

Suggested Matching Circuit

重要資訊 ：

匹配元件建議使用精準度高的電感±0.1~0.3nH、電容±0.1pF

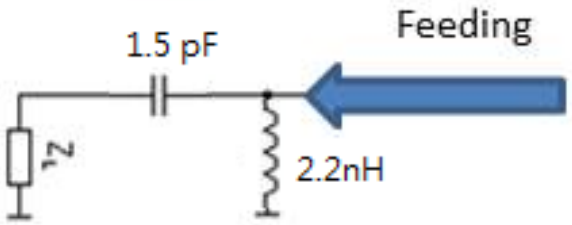

Layout Dimensions in Clearance area(Size=5.9*5.0mm)

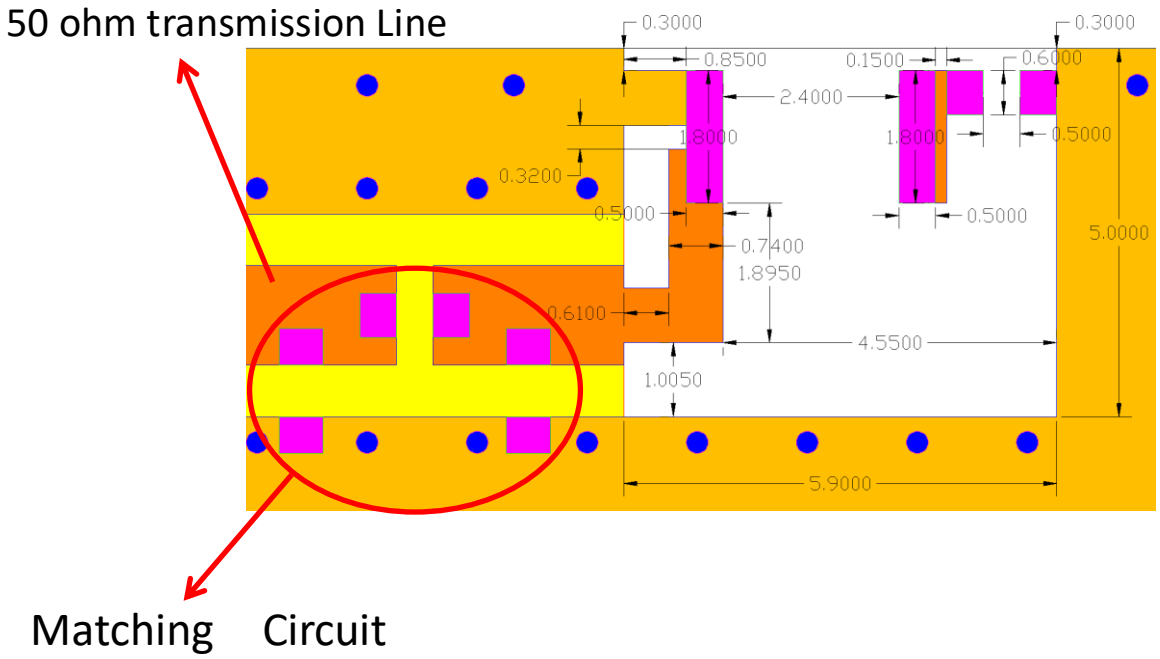

FootPrint (Unit : mm)

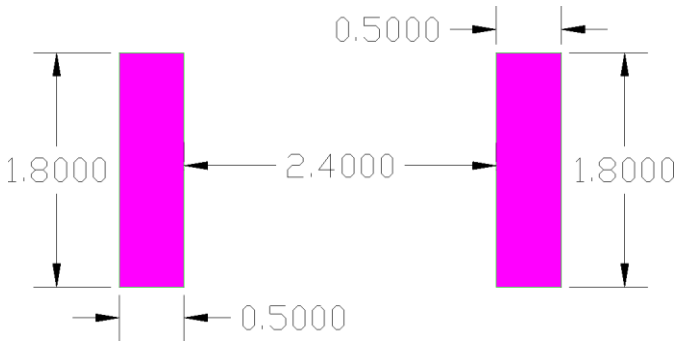

- **2nd Layout Dimensions in Clearance area(Size=8.0*3.0mm)**

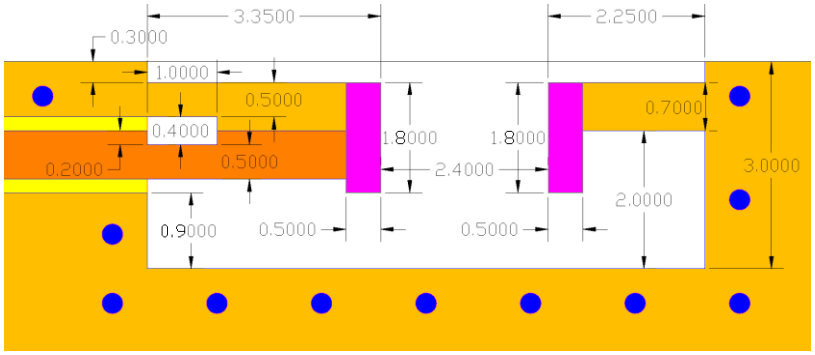

3. Measurement Results

Return Loss

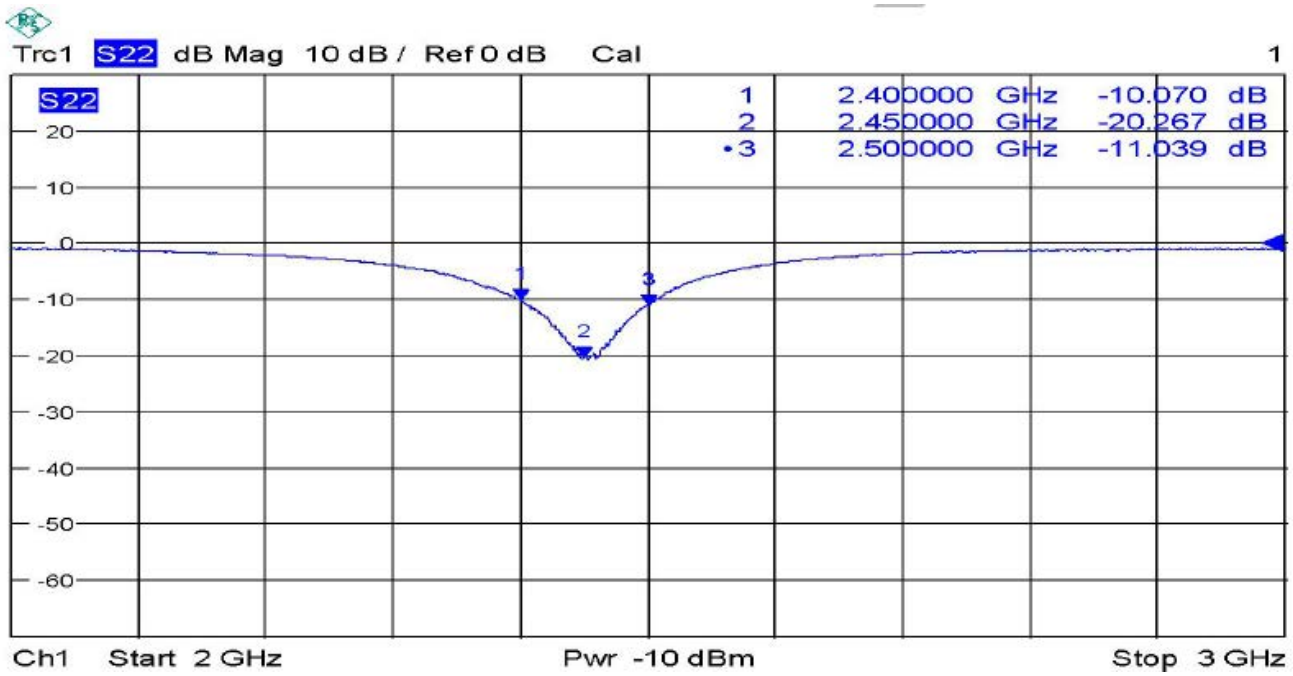

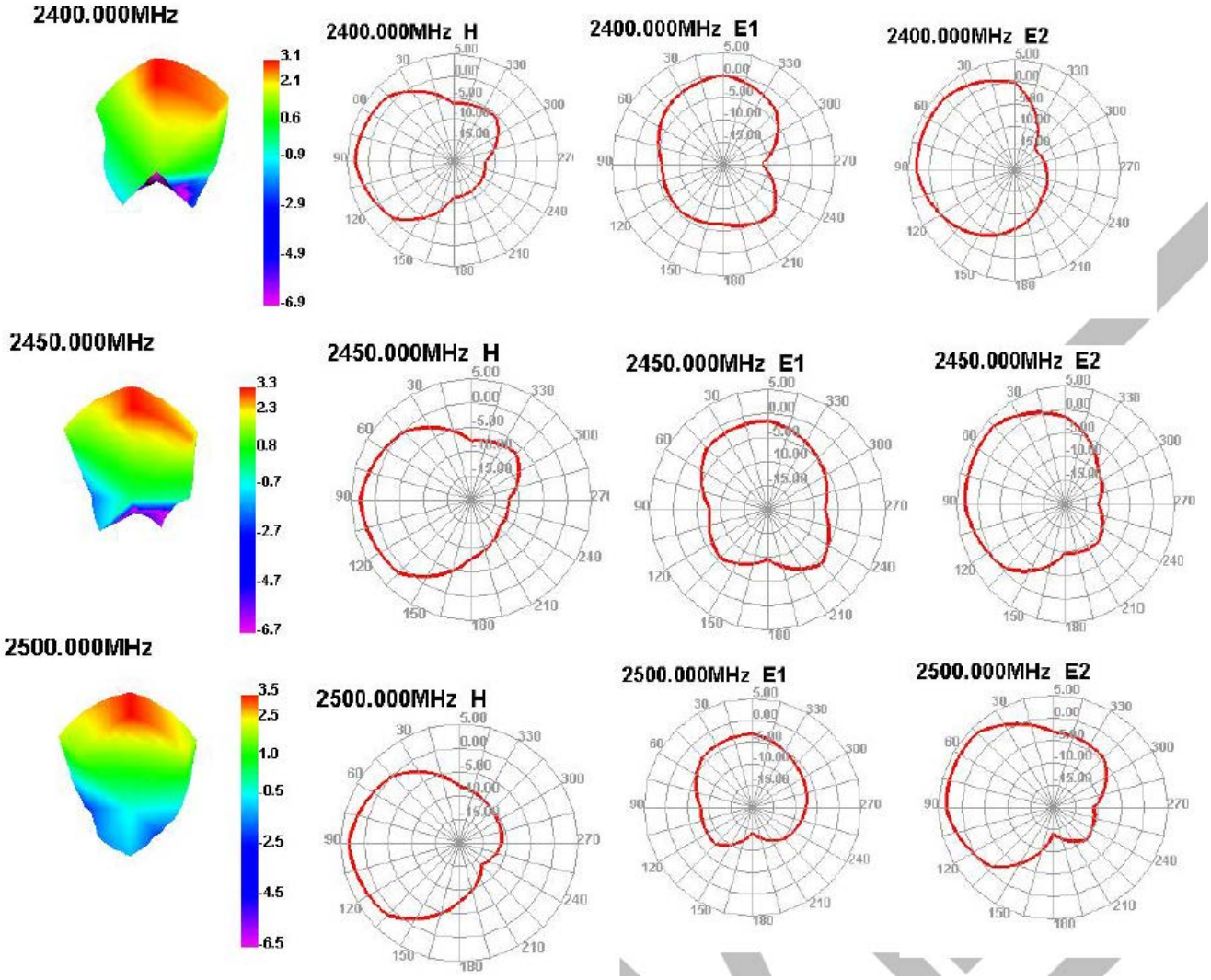

Radiation Pattern

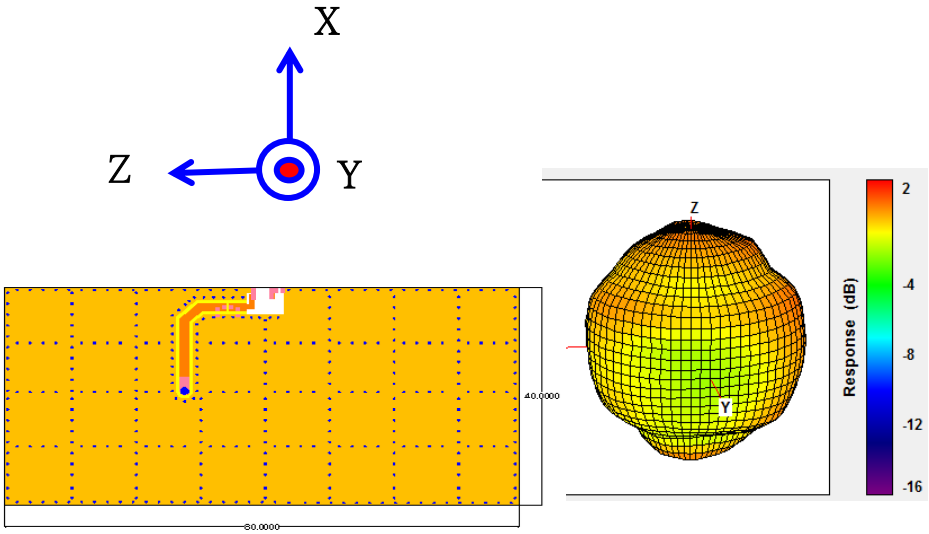

	Efficiency	Peak Gain
2400MHz	55.21%	3.1 dBi
2450MHz	66.45%	3.3 dBi
2500MHz	57.53%	3.5 dBi

Chamber Coordinate System

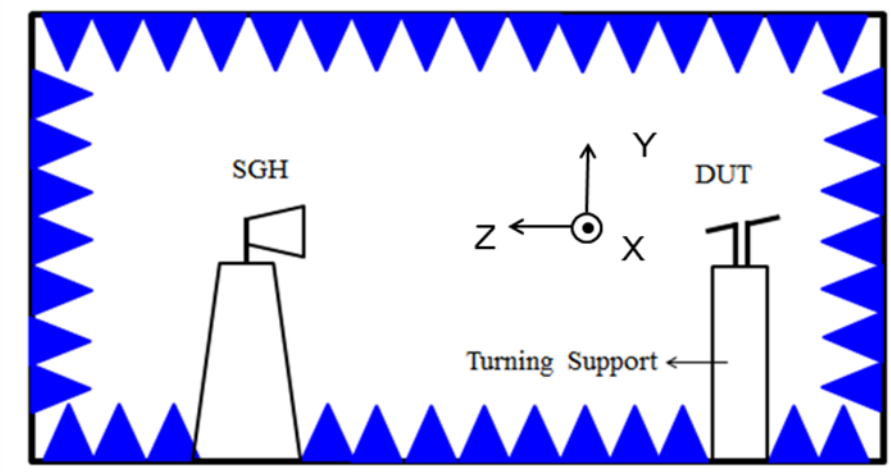

4.Reliability and Test Condictions

<table>
<tr><th>ITEM</th><th>REQUIREMENTS</th><th>TEST CONDITION</th></tr>
<tr><td>Solderability</td><td>1. Wetting shall exceed 90% coverage
2. No visible mechanical damage
 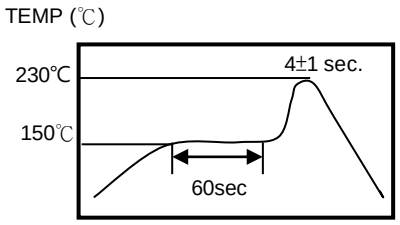
</td><td>Pre-heating temperature:150℃/60sec.
Solder temperature:230±5℃
Duration:4±1sec.
Solder:Sn-Ag3.0-Cu0.5
Flux for lead free: rosin</td></tr>
<tr><td>Solder heat Resistance</td><td>1. No visible mechanical damage
2. Central Freq. change :within ± 6%
 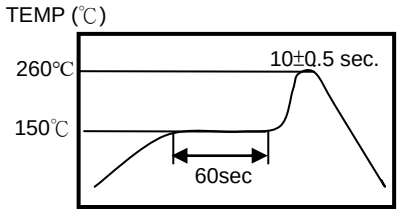
</td><td>Pre-heating temperature:150℃/60sec.
Solder temperature:260±5℃
Duration:10±0.5sec.
Solder:Sn-Ag3.0-Cu0.5
Flux for lead free: rosin</td></tr>
<tr><td>Component Adhesion (Push test)</td><td>1. No visible mechanical damage</td><td>The device should be reflow soldered(230±5℃ for 10sec.) to a tinned copper substrate A dynometer force gauge should be applied the side of the component. The device must with-ST-F 0.5 Kg without failure of the termination attached to component.</td></tr>
<tr><td>Component Adhesion (Pull test)</td><td>1. No visible mechanical damage</td><td>Insert 10cm wire into the remaining open eye bend ,the ends of even wire lengths upward and wind together.
Terminal shall not be remarkably damaged.</td></tr>
<tr><td>Thermal shock</td><td>1. No visible mechanical damage
2. Central Freq. change :within ±6%
<table><tr><th>Phase</th><th>Temperature(℃)</th><th>Time(min)</th></tr><tr><td>1</td><td>+110±5℃</td><td>30±3</td></tr><tr><td>2</td><td>Room Temperature</td><td>Within 3sec</td></tr><tr><td>3</td><td>-40±2℃</td><td>30±3</td></tr><tr><td>4</td><td>Room Temperature</td><td>Within 3sec</td></tr></table></td><td>+110℃=>30±3min
-40℃=>30±3min
Test cycle:10 cycles
The chip shall be stabilized at normal condition for 2~3 hours before measuring.</td></tr>
<tr><td>Resistance to High Temperature</td><td>1. No visible mechanical damage
2. Central Freq. change :within ±6%
3. No disconnection or short circuit.</td><td>Temperature: +110±5℃
Duration: 1000±12hrs
The chip shall be stabilized at normal condition for 2~3 hours before measuring.</td></tr>
<tr><td>Resistance to Low Temperature</td><td>1. No visible mechanical damage
2. Central Freq. change :within ±6%
3. No disconnection or short circuit.</td><td>Temperature:-40±5℃
Duration: 1000±12hrs
The chip shall be stabilized at normal condition for 2~3 hours before measuring.</td></tr>
<tr><td>Humidity</td><td>1. No visible mechanical damage
2. Central Freq. change :within ±6%
3. No disconnection or short circuit.</td><td>Temperature: 40±2℃
Humidity: 90% to 95% RH
Duration: 1000±12hrs
The chip shall be stabilized at normal condition for 2~3 hours before measuring.</td></tr>
</table>

5.Soldering and Mounting

Mildly activated rosin fluxes are preferred. The minimum amount of solder can lead to damage from the stresses caused by the difference in coefficients of expansion between solder, chip and substrate. The terminations are suitable for all wave and re-flow soldering systems. If hand soldering cannot be avoided, the preferred technique is the utilization of hot air soldering tools.

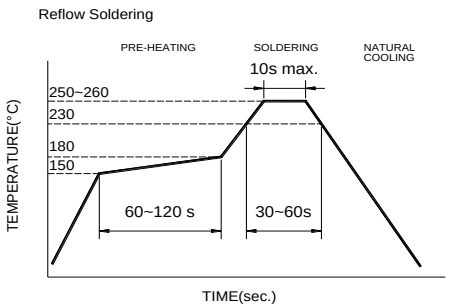

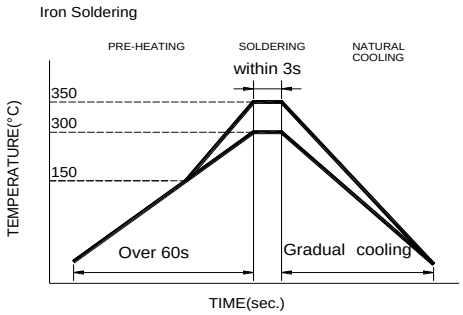

Recommended temperature profiles for re-flow soldering in Figure 1.

Products attachment with a soldering iron is discouraged due to the inherent process control limitations. In the event that a soldering iron must be employed the following precautions are recommended.

- Preheat circuit and products to 150℃
- Never contact the ceramic with the iron tip
- Use a 20 watt soldering iron with tip diameter of 1.0mm
- 280℃ tip temperature (max)
- 1.0mm tip diameter (max)
- Limit soldering time to 3 sec.

6.Packaging Information

Tape Specification:

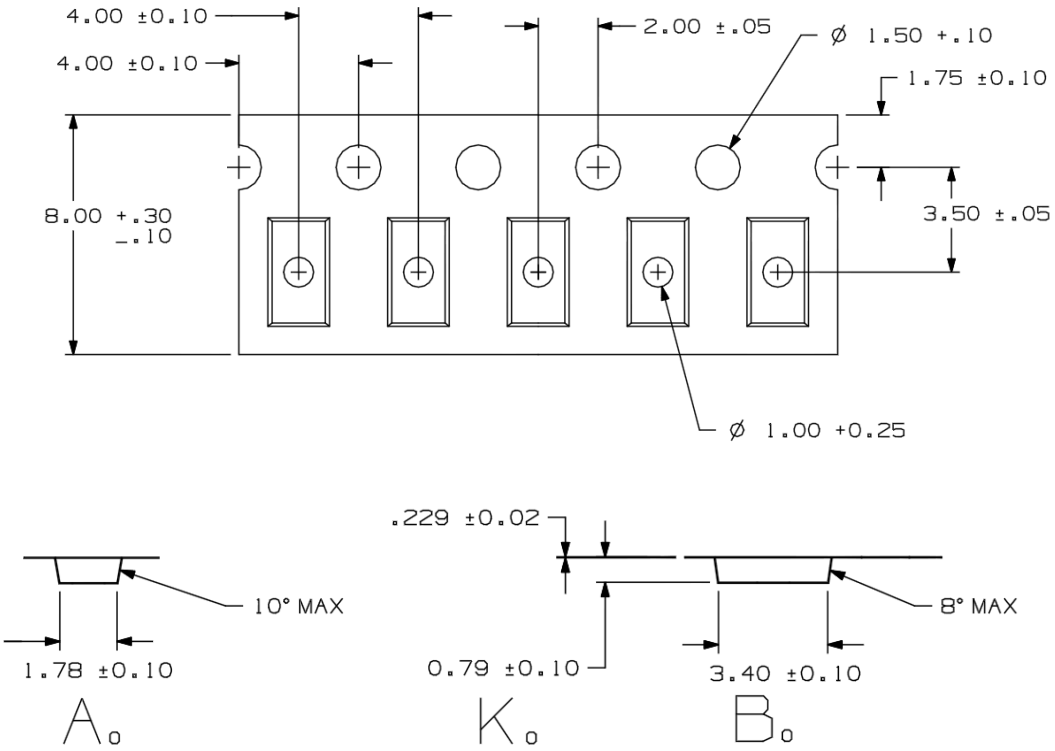

Reel Specification: (7'', Φ180 mm)

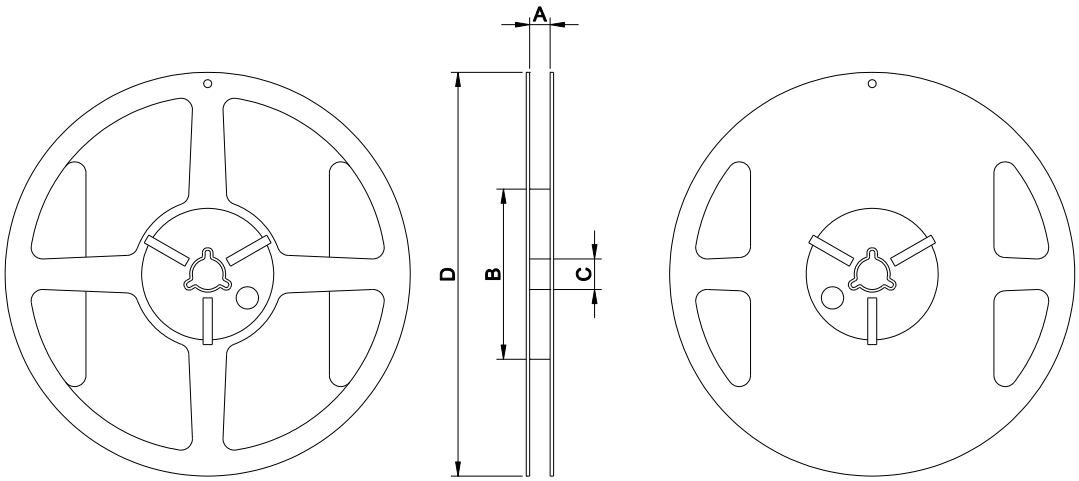

7" x 8 mm

Tape Width(mm)	A(mm)	B(mm)	C(mm)	D(mm)	Chip/Reel(pcs)
8	9.0±0.5	60±2	13.5±0.5	178±2	3000

7.Storage and Transportation Information

Storage Conditions

To maintain the solderability of terminal electrodes:

1. Temperature and humidity conditions: -10~ 40℃ and 30~70% RH.

2. Recommended products should be used within 6 months from the time of delivery.

3. The packaging material should be kept where no chlorine or sulfur exists in the air.

Transportation Conditions

1. Products should be handled with care to avoid damage or contamination from perspiration and skin oils.

2. The use of tweezers or vacuum pick up is strongly recommended for individual components.

3. Bulk handling should ensure that abrasion and mechanical shock are minimized.