Level Probing Radar

4-20mA / SDI-12 protocol

USER MANUAL

CAE tech

Index

© Copyright 2016 CAE S.p.A. All rights reserved

Issued July 2016 - Rev. 1.0.2

http://www.cae.it

Summary

1.1 Scope 6

2. Safety

2.1 Authorized personnel 8
2.2 Approriate use 8
2.3 General safety instructions 8
2.4 EC conformity 8
2.5 Radio licenses for USA 9
2.6 Environmental Instructions 9

3. Introduction

3.1 LPR Level Probing Radar 12

4. Product description

4.1 Introduction 14
4.2 Principle of operation 14
4.3 Advantages 15
4.4 Technical data 16

5. Installation

5.1 Assembly instruction 18
5.2 Mounting 19
5.3 Criteria for selecting a suitable mounting location 20

6. Wiring

6.1 Wiring 24
6.2 Connecting power supply 24
6.3 Connecting LPR using RS485 interface 24
6.4 Connecting LPR using 4-20 mA interface 25

7. Configuration

7.1 LPR Software Config 28

8. Troubleshooting

8.1 Troubleshooting 30

9. SDI-12 Protocol

9.1 Physcal interface 34
9.2 Basic commands 34
9.3 Measure commands 34
9.4 Configuration Commands 36

10. Appendix

10.1 Astronomy station location 44

Disclaimer

Brand names, logos and trademarks used herein remain the property of their respective owners. This listing of any firm or their logos is not intended to imply any endorsement or direct affiliation with CAE S.p.A..

1. About this document

1.1 Scope

This operating instruction manual provides all the information required for mounting, connection and setup as well as important instructions for maintenance and troubleshooting. Please read this information before putting the instrument into operation and keep this manual accessible in the immediate vicinity of the device.

This manual is intended to trained technical personnel.

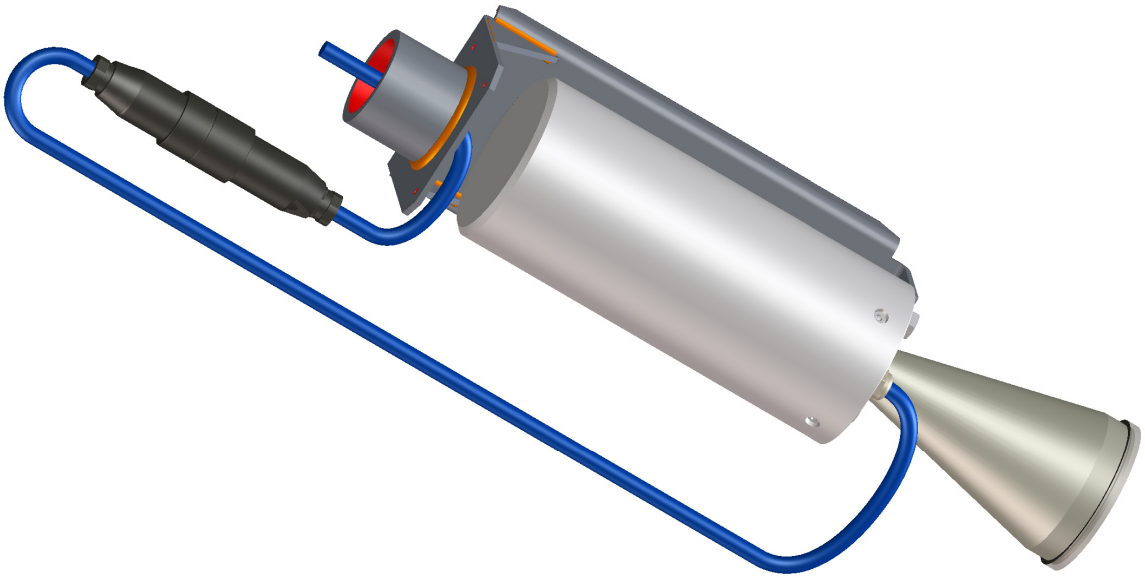

2. Safety

2.1 Authorized personnel 8
2.2 Approriate use 8
2.3 General safety instructions 8
2.4 EC conformity 8
2.5 Radio licenses for USA 9
2.6 Environmental Instructions 9

2.1 Authorized personnel

All operations described in this user manual must be carried out only by trained and authorized specialist personnel.
During work on and with the device the required personal protective equipment must always be worn.

2.2 Approriate use

LPR is a sensor for continuous level measurement.
You can find detailed information about the area of application in the "Product description" chapter.
Operational reliability is ensured only if the instrument is properly used according to the specifications in the user manual.

2.3 General safety instructions

This is a state-of-the-art instrument complying with all the prevailing regulations and guidelines. The instrument must only be operated in a technically flawless and reliable condition. The operator is responsible for the trouble-free operation of the instrument.
During the entire duration of use, the user is obliged to determine the compliance of the necessary occupational safety measures with the current valid rules and regulations and also take note of new regulations.
The safety instructions in this user manual, the national installation standards as well as the valid safety regulations and accident prevention rules must be observed by the user.
For safety and warranty reasons, any invasive work on the device beyond that described in the user manual may be carried out only by personnel authorized by the manufacturer. Arbitrary conversions or modifications are explicitly forbidden.
The safety approval markings and safety tips on the device must also be observed.
The low emitting frequencies are in the K band and they are far below the internationally approved limit values. When used correctly, the device poses no danger to health.

2.4 EC conformity

The device fulfills the legal requirements of the applicable EC guidelines. By affixing the CE marking, we confirm successful testing of the product.
The EC Certificate of Conformity is available on request.

Electromagnetic compatibility
The instruments are designed for use in an industrial environment. Nevertheless, electromagnetic interference from electrical conductors and radiated emissions must be taken into account, as is usual with class A instruments according to EN 61326-1. If the instrument is used in a different environment, the electromagnetic compatibility to other instruments must be ensured by suitable measures.
Radio license for Europe
The instrument is approved according to EN 302729-1/2 for use in closed vessels and outside closed vessel.
It is approved for unrestricted use inside and outside of closed vessels in countries of the EU and EFTA that have implemented this standard: Austria, Belgium, Bulgaria, Germany,

Denmark, Estonia, France, Greece, Great Britain, Ireland, Island, Italy, Liechtenstein, Lithuania, Latvia, Luxembourg, Malta, Netherlands, Norway, Poland, Portugal, Romania, Sweden, Switzerland, Slovakia, Slovenia, Spain, Czech Republik, Cyprus, Finland and Hungary.

For operation outside of closed vessels, the following conditions must be fulfilled:

- The installation must be carried out by trained qualified personnel
- The instrument must be stationary mounted and the antenna directed vertically downward
- The mounting location must be at least 4 km away from radio astronomy stations, unless special permission was granted by the responsible national approval authority
- When installed within 4 to 40 km of a radio astronomy station, the instrument must not be mounted higher than 15 m above the ground.

You can find a list of the respective radio astronomy stations in chapter "Annex 1".

2.5 Radio licenses for USA

This equipment has been tested and found to comply with the limits for a Class B digital device, pursuant to part 15 of the FCC Rules.
These limits are designed to provide reasonable protection against harmful interference in a residential installation.
This equipment generates, uses and can radiate radio frequency energy and, if not installed and used in accordance with the instructions, may cause harmful interference to radio communications.

However, there is no guarantee that interference will not occur in a particular installation.

If this equipment does cause harmful interference to radio or television reception, which can be determined by turning the equipment off and on, the user is encouraged to try to correct the interference by one or more of the following measures:

- Reorient or relocate the receiving antenna.
- Increase the separation between the equipment and receiver.
- Connect the equipment into an outlet on a circuit different from that to which the receiver is connected.
- Consult the dealer or an experienced radio/TV technician for help

Modifications not expressly approved by the manufacturer will lead to expiry of the operating licence according to FCC/IC.

2.6 Environmental Instructions

Dismounting steps
Warning: Before dismounting, take note of the "Mounting" and "Connecting to power supply" chapters and carry out the listed steps in reverse order.

Disposal
The instrument consists of materials which can be recycled by specialized recycling companies. We use recyclable materials and have designed the parts to be easily separable. Correct disposal avoids negative effects on humans and the environment and ensures recycling of useful raw materials.

WEEE directive 2011/65/EU

This instrument is not subject to the WEEE directive 2011/65/EU and the respective national laws. Pass the instrument directly on to a specialized recycling company and do not use the municipal collecting points. These may be used only for privately used products according to the WEEE directive.

3. Introduction

3.1 LPR Level Probing Radar 12

3.1 LPR Level Probing Radar

This document gives the technical specifications and the functioning explanations of the level probing radar LPR for water level measurement and wave measurement application.

The main parts of LPR Sensor are shown below.

In field installation

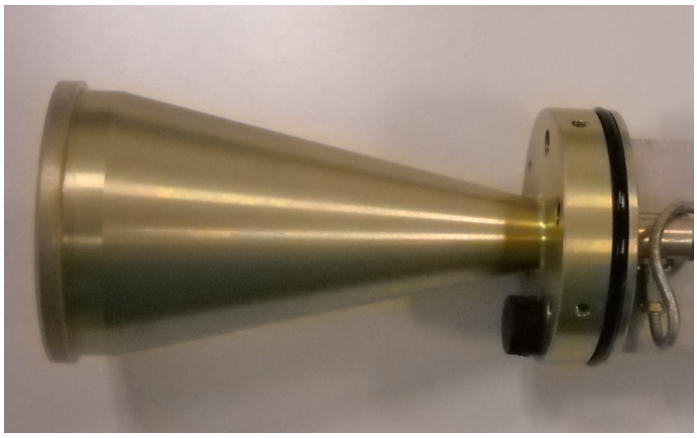

Antenna

Sensor and support

4. Product description

4.1 Introduction 14
4.2 Principle of operation 14
4.3 Advantages..... 15
4.4 Technical data 16

4.1 Introduction

The CAE LPR is a radar sensor for level measurement of liquids.
The instrument is ideal for all applications in water level measurement in open channels, rivers and lakes. It is suitable also for the measurement of wave parameters on the sea.

4.2 Principle of operation

The LPR level probing radar is based on radar technology. This technology is independent from temperature and humidity changes, providing accurate measurements in all weather conditions.

In the FMCW (Frequency Modulated Continuous Wave) radar the electromagnetic signal is continuously transmitted. The frequency of this signal changes over time, in a sweep across a set bandwidth. The difference in frequency between the transmitted and received (reflected) signal is determined by mixing the two signals, producing a new signal which can be measured to determine distance. A saw-tooth function is used to change the frequency pattern for the emitted signal that is swept linearly in frequency. The received signal is then mixed with the emitted signal and due to the delay caused by the time of flight for the reflected signal, there will be a frequency difference that can be detected as a signal in the low frequency range.
The low frequency (IF) signal has to be processed by FFT and other mathematical functions to calculate the effective range.

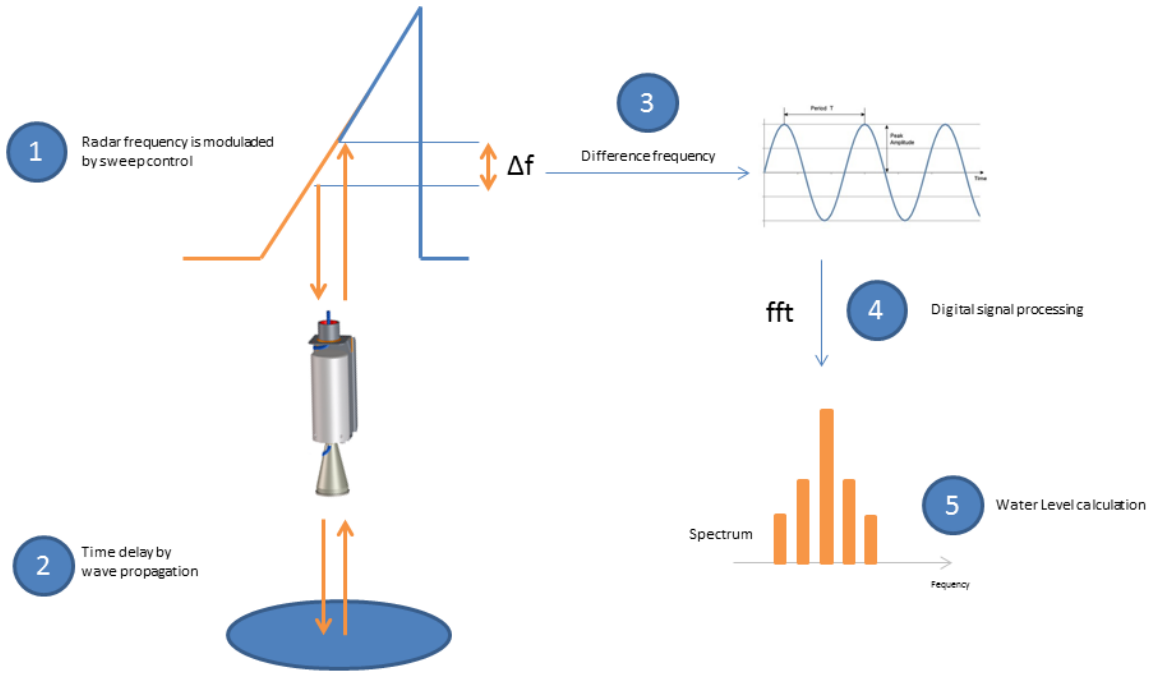

4.3 Advantages

High resolution distance measurement
Mm-wave FMCW radars can have very high resolution for ranging, velocity and imaging application.

Quick updating of measurement
Because FMCW mm-wave radars are continuously transmitting a signal, there is a very short delay in measurement updates.

Functions correctly in many types of weather and atmospheric conditions
Due to the short wavelength of the electromagnetic radiation used, mm-wave systems have excellent performance in rain, humidity, fog and dusty conditions. The short wave-length means that raindrops, water vapor or dust particles do not block wave propagation easily. Heavy rain is generally required before a reduction in range or resolution occurs. mm-wave systems will function identically during day or night. FMCW radars are also immune to effects from temperature differences, or high temperatures.
The actual water level of the waterway is then calculated automatically, if required, by the radar sensor.
To do this, on initial startup there is the possibility of inputting the relevant measurement mode and a reference value.
Two standardized electrical interfaces are available for connecting the LPR to a datalogger or peripheral devices: RS-485 (SDI-12 protocol) and 4-20 mA.

When using the 4-20 mA interface, it is possible to scale the measurement output to a smaller measuring range.

4.4 Technical data

LEVEL PROBING RADAR	
Cpu (DSC)	Microchip dsPIC33
Serial Interface	RS485 (SDI-12 protocol)
Analog Interface	4-20 mA (external supply loop 10.8-33V) 16 bit resolution
Frequency	24.05-25.5 GHz
Range	0.5 – 35 m
Resolution	+/- 1 mm
Accuracy	+/- 2 mm
Mean spectral power density	-33.2 dBm EIRP
Max peak power	24.4 dBm EIRP
Antenna beam	12°
Power supply range	12-14V (11 - 16 V max)
Consumption @ 12.5V	Stand-by 0.8 mA (polled mode) 6 mA (continuous mode) ON 25 mA Mean on measure 50 mA
Over-voltage Protection	Semiconductor device
Operative temperature range	-20 / +60 °C
IP	IP65
Antenna	Aluminum alodine coated with rexolite radome
Case	Polyoxymethylene
Dimensions	330 x 85 (l x d) mm
Weight	1100 g

5. Installation

5.1 Assembly instruction 18
5.2 Mounting 19
5.3 Criteria for selecting a suitable mounting location..... 20

The electrical installation of LPR may only be carried out by qualified personnel.

5.1 Assembly instruction

CAUTION

The electrical installation of LPR may only be carried out by qualified personnel.

The LPR mounting bracket must be fixed to the sensor by mean of three M8 hex bolts and washers.
It's advisable to mount first the bracket on the support tube and then the sensor on the bracket.
The bracket is designed to be mounted on a support tube with a 1' 1/4 Gas male threaded terminal.

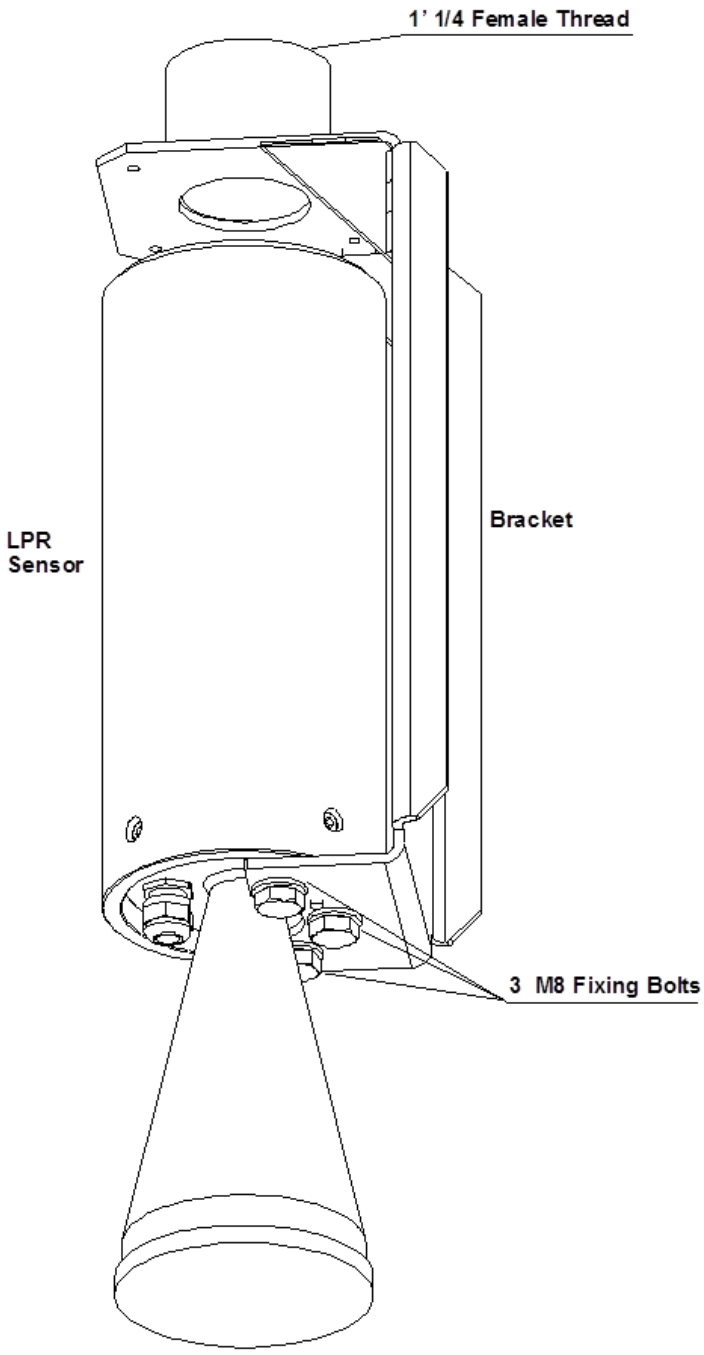

5.2 Mounting

The sensor support tube must be easily removed or turned to ensure access to the sensor but at the same time it must ensure a stable and vibration-free mounting.

Mount the bracket on the threaded support tube. To ensure a good mechanical attachment and an easy disassembly it is appropriate to use teflon tape on the male thread.

WARNING

The alignment of the sensor parallel to the water surface must be carried out as accurately as possible!

- deviation from the parallel alignment leads to a linearity error.
- incorrect alignment of > 4° can lead to a function failure of the CAE LPR (depending on the other operating parameters such as distance between lower sensor edge and water surface).

The connection cable can be routed inside the support tube and must be wired on the supplied 7 pole socket connector.

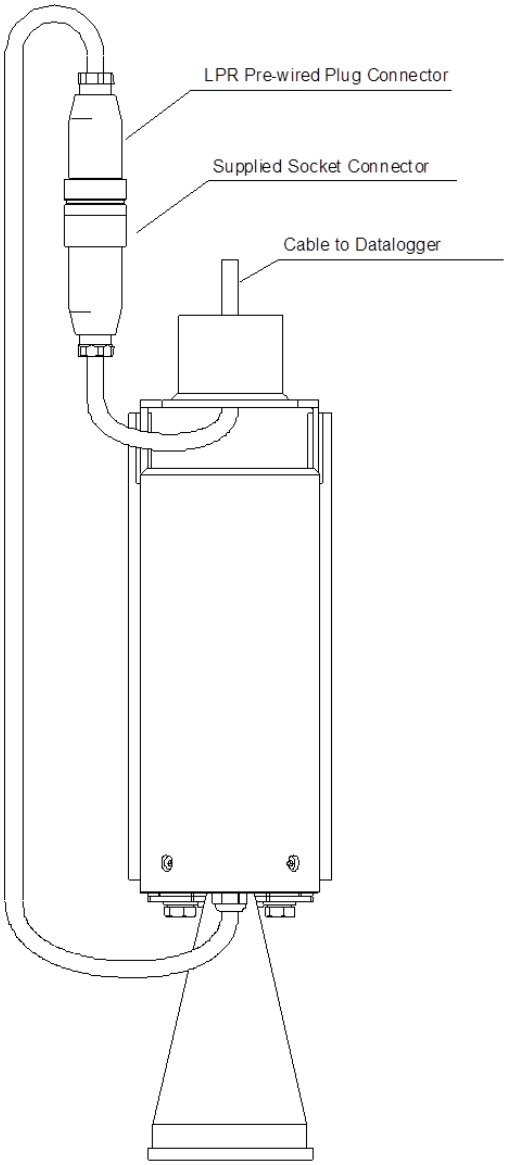

5.3 Criteria for selecting a suitable mounting location

Possible mounting locations are, for example, bridges and auxiliary constructions directly above the waterway section to be measured.
The minimum distance between the lower edge of the sensor and water surface must be 0.5 m – 1.64 ft (dead area in which no useable measurement is possible).
Select a mounting point high enough so that the measurement is possible even with high water levels.
The mounting point must be steady. Vibrations and movement of the mounting point must be avoided. Bridges are affected by movements of several centimeters as a result of load changes and temperature movements. If pillars are available, the sensor can be mounted to a stable positioned pillar with a suitable spacer.
The water surface must be as smooth as possible in the area of the sensor beam. Avoid turbulent areas, areas where foam is created, surge areas and waterway sections where obstructions or bridge piers cause changes in the water level. The measurement result cannot be used if there is ice or snow on the water surface!

Choose a mounting location that does not become dry at low water levels. Stations subject to very rapid changes in water level are not suitable. The LPR averages its measurement result over a measuring time from 6 to 50 seconds.

The area within the sensor beam (see Figure below) must be completely free of obstructions.

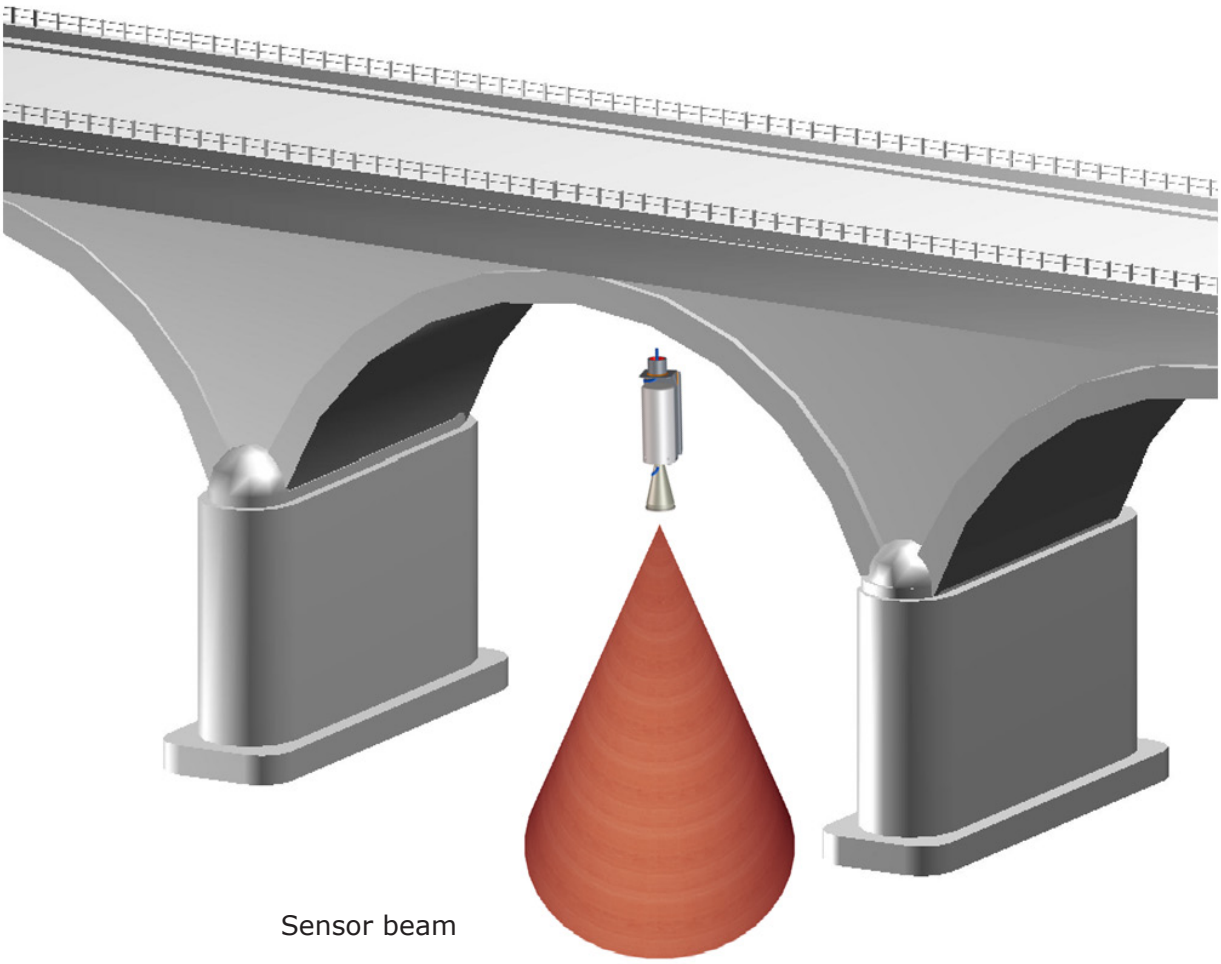

Table for approximating the size of the sensor beam

Target Distance		Sensor beam diameter	
2 m	6.56 ft	0.42 m	1.39 ft
5 m	16.40 ft	1.06 m	3.49 ft
10 m	32.81 ft	2.12 m	6.97 ft
15 m	49.21 ft	3.19 m	10.46 ft
20 m	65.62 ft	4.25 m	13.95 ft
25 m	82.02 ft	5.31 m	17.43 ft
30 m	98.43 ft	6.38 m	20.92 ft
35 m	114.83 ft	7.44 m	24.41 ft

The diameters given are minimum sizes. Where possible, select an area free of obstruction that is clearly larger.
Avoid large metal surfaces near the sensor beam (reflections from these surfaces can distort the measurement result).

The climate specifications in the technical data must be kept at the mounting location.

To be in compliance with the European normative it is necessary to observe the installation clauses reported in Par 2.4 EC Conformity.

Danger of explosion due to spark formation and electrostatic discharge
The use of the CAE LPR in explosive atmospheres can lead to the danger of ignition of this atmosphere. An explosion resulting from this involves the risk of very severe material and personal damage.

Never operate the CAE LPR in explosive areas (e. g. in sewers). The CAE **LPR is <u>not equipped</u> with EX-protection** (EXplosion protection)!.

Page intentionally left blank

6. Wiring

6.1 Wiring 24
6.2 Connecting power supply 24
6.3 Connecting LPR using RS485 interface 24
6.4 Connecting LPR using 4-20 mA interface . 25

6.1 Wiring

The sensor comes with a 7 pole cable plug connector attached, with screw locking.

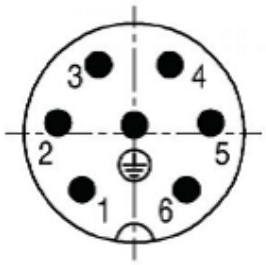

Terminal	Signal
1	Power +
2	GND
3	RS485-A
4	RS485-B
5	Power 4-20 mA
6	Out+ 4-20 mA
PGND	GND

The sensor is supplied with a 7 pole cable socket connector, mating with the plug of the sensor. The connectors, when tightened, are IP67 rated.
The socket connector may be cabled to connect the LPR to the datalogger or acquisition device.
The cable screen must be connected only on the datalogger side.
For the cabling refer to the datalogger instructions.

6.2 Connecting power supply

The LPR sensor requires a power supply of 11-16 V DC, typ. 12/14V DC (i.e. using batteries or mains connection with galvanically separated low safety voltage).

Secure the power supply positive terminal cable (terminal 1 of the supplied connector) with a fuse (1 ampere, reaction time: fast) and wire power supply Gnd to pin 2 of the connector. When using solar panels, it's recommend to use an overvoltage protection device.

6.3 Connecting LPR using RS485 interface

Connect the CAE LPR to a RS485 SDI-12 input of the datalogger. Follow the datalogger handbook for this operation.
Refer to Par. 7 for the LPR connection assignments.
The maximum length of the connecting cable is 100 m - 330 ft. Recommended wire cross-section: 0.5 mm2 - AWG 21, 4 wire cable, external diameter 6-8 mm. Using this cable due to cable resistance the minimum Power is 12V.

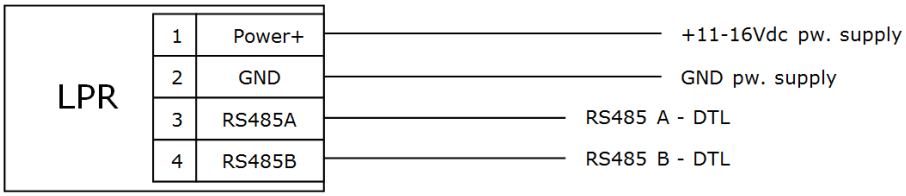

The SDI-12 commands for the LPR are shown in Chapter 9, SDI-12 protocol.

6.4 Connecting LPR using 4-20 mA interface

Connect the CAE LPR to a 4-20 mA input of the datalogger. Follow the datalogger handbook to carry out this operation.
Refer to Par. 7 for the CAE LPR connection assignments. The maximum connecting cable length/recommended wire cross-section depends on the amount of voltage supply and the burden amount (load resistor). Please note that the ohmic resistance of the connecting cable, together with the eventually existing burden, does not exceed the maximum allowed load resistance!

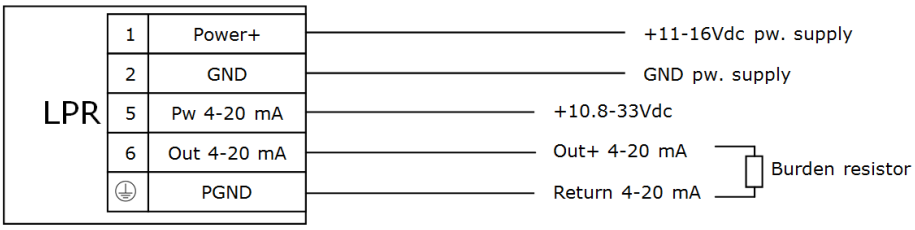

The 4-20 mA interface of the CAE LPR **is passive**. If needed the supply for the current loop must be injected by wire-linking the supply voltage.

Tip: To connect the CAE LPR using the 4-20 mA interface, a minimum 4-wire cable is required, it is possible to connect together pin 1 and 5 of the connector and the power supply maximum voltage is 16V, the Gnd supply must be connected to pin 2. The 4-20 mA output (positive) must be connected to pin 6. The 4-20 mA return GND (second pole of the burden resistor) must be connected to the PGND terminal.

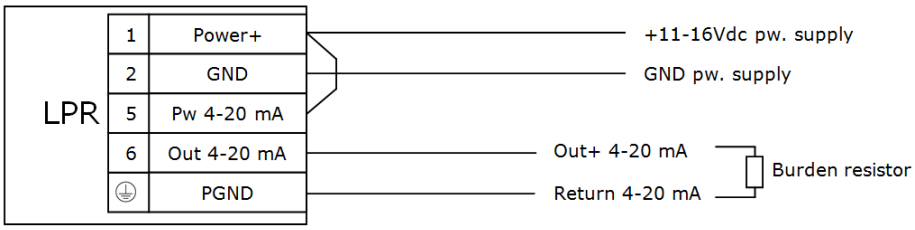

If the LPR must also be configurable via SDI-12 commands, use a 7-wire (cable length up to 100 m).

The load resistance (burden+ohmic resistance of the connection cable) connected to the CAE LPR must not exceed a specific maximum value.
This value depends on the supply voltage level at 4-20 mA loop. If the load resistance is greater, the output current can no longer be evaluated. Smaller load resistances are allowed.

Read off the maximum load resistance for your power supply from the following diagram.

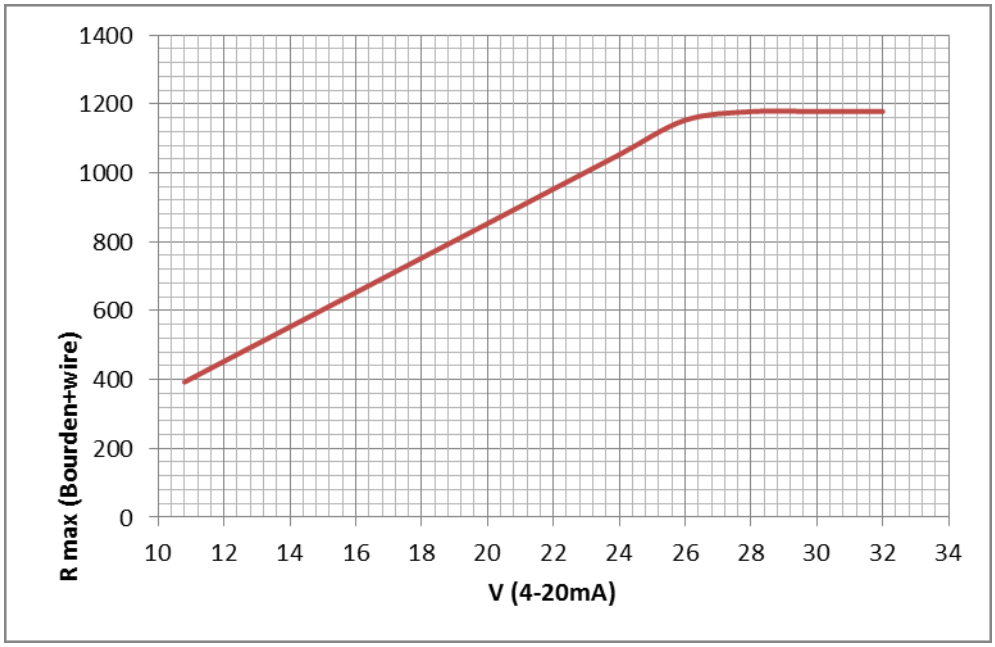

Maximum load resistance

Example: Power supply 12 volt max. load resistance 450 ohm.

The LPR delivers an output current corresponding to the measured value for a load resistance up to 450 ohm.

Dimension the connected electrical circuit accordingly. Check the input resistance of the connected peripheral device for this purpose.

The 4-20 mA scale value is scaled according the maximum and minimum distance programmed. The default values (0-35m) can be programmed by SDI-12 extended command for minimum and maximum value (see Par 9.4).
It is also possible to assign the 4-20 mA output at any of the measure parameters. By default the 4-20 mA output is disabled.

7. Configuration

7.1 LPR Software Config 28

7.1 LPR Software Config

The " LPR Software Config " software utility is available for the LPR configuration and testing.
This tool is available for Microsoft Windows© versions 7, 8 and 10 and it is connected with the sensor by RS485 / Sdi-12 interface.

CAE has tested the FTDI USB-RS485-WE-1800-BT and FTDI USB-RS485-WE-5000-BT cables that are suitable for this use.

For more details see LPR Software Config – User Manual available in www.cae.it.

7.2 Operational modes

The LPR can be operated in several different modes.

There are two main functional modes:
- Hydrometer: the sensor measures the water level (by command or time scheduled)
- Wavemeter: the sensor measures the water level continuously, processing the elementary measurement to obtain the wave parameters

Each of the two functional modes has two operational modes:
- Continuous Mode: the sensor takes the measurement by scheduled time
- Polled Mode: the sensor takes the measurement using SDI-12 protocol command

The functional and operational modes are programmable by SDI-12 commands.

The measure output can be placed on the 4-20 mA interface (only 1 parameter) and can be configured to scaled on a specific range of distance by mean of specific SDI-12 configuration command. Also the Continuous interval is used to update the 4-20mA value measure.

7.3 Operational parameters

In Hydrometer modes the main parameters to set are:
- Hydrometric offset, to align the LPR readings to the hydrometric level.
- Minimum distance
- Maximum distance
- Number of the elementary measures

It is also possible to set a dead band where obstacles may not be detected.

It is advisable to set the minimum and maximum distance to the effective minimum and maximum distance possible (i.e. the distance at minimum water level and the distance at maximum water level). The 4-20 mA output is automatically fixed by the minimum-maximum distance range. The distance to set is from the sensor to the water and not the offset corrected value (hydrometric level).

8. Troubleshooting

8.1 Troubleshooting.....30

8.1 Troubleshooting

In the following table there are the major critical conditions that could be possible using LPR sensor.

Critical condition	Cause	To do
Measure not available	• Level echo is too low to be detected • Antenna is dirty or defective • Sensor doesn't detect echo	• Check installation conditions • Check the electronic level • Check LPR parameters (try to modify the number of valid measures) • Clean antenna
No communication between sensor and "LPR SW config"	• Configuration error • SW in LPR sensor is in fault • Driver error • RS485 converter error	• Check SDI-12 protocol address • Switch off the sensor, wait 3 minutes and after switch on • Check driver software • Replace RS485 converter
Generic software error	• Generic software error	• Switch off the sensor, wait 3 minutes and after switch on
Software upgrade failed	• Software upgrade failed	• Check SW version • Check electronics version • Repeat software update • Send instrument for repair
Internal temperature too high	• Temperature of the electronics too high or out of range	• Check electronics version • Check ambient temperature • Switch off the sensor, wait 3 minutes and after switch on and check the internal temperature

Page intentionally left blank

Page intentionally left blank

9. SDI-12 Protocol

9.1 Physcal interface 34
9.2 Basic commands 34
9.3 Measure commands 34
9.4 Configuration Commands 36

9.1 Physcal interface

The physical interface is a RS485 with parameters 1200,E,7,1 allowing the physical channel sharing with a proprietary protocol for the firmware upgrade.
For the diagnostic data there is a baud rate change in the data transmission from LPR to the diagnostic tool (CAE LPRconfig utility).
The standard implementation is according SDI-12 v1.3.

9.2 Basic commands

Below there are the basic commands.
a = sensor address (default 0)

Command	Description	Response
a!	Acknowledge	a<CR><LF>
aI!	Identity (Instrument Info)	allcccccccmmmmmmvvvxxx...xx<CR><LF> ll = Version SDI-12 v1.3 = 13 cccccccc = CAE SpA mmmmmm = Sensor Name vvv = Fw. version xxx...xx = Sensor SN
aAb!	Set SDI-12 Address b = Address	b<CR><LF>
?!	Query Address	a<CR><LF>

9.3 Measure commands

Below there are the measure commands:
a = sensor address (default 0)

Command	Description	Response
aM! aMC!	Execute Measure Execute Measure (with CRC)	atttn<CR><LF> ttt = wait seconds n = n return values
aC! aCC!	Execute concurrent Measure Execute concurrent Measure (with CRC)	atttn<CR><LF> ttt = wait seconds n = n return values

Reading on Hydrometer		
aD0!	Measures reading	a < m e a s u r e > < s / n > < b a t t e r y V>[<CRC>]<CR><LF>
aD1!	Average value reading	a<average>[<CRC>]<CR><LF>
aD2!	Maximum value reading	a<maximum>[<CRC>]<CR><LF>
aD3!	Minimum value reading	a<minimum>[<CRC>]<CR><LF>
aD4!	Weighted average reading	a< weighted average >[<CRC>]<CR><LF>
aD5!	Median reading	a<median>[<CRC>]<CR><LF>
aD6!	Dispersion reading	a<dispersion>[<CRC>]<CR><LF>
aD7!	Number of valid measure reading	a<n of valid measures >[<CRC>]<CR><LF>
aD8!	Internal temperature reading	a<internal temperature>[<CRC>]<CR><LF>
aD9!	Instrument vertical inclination reading	a<vertical inclination >[<CRC>]<CR><LF>

Reading on Diagnostic mode		
aV!	Execute diagnostic	a<CR><LF>
aD0!	Measures reading	A<diagnostic byte>[<CRC>]<CR><LF>

9.4 Configuration Commands

Below there are the configuration commands:
a = sensor address (default 0)

Write commands

Command	Description	<val>	Response
aXIM!	Set as Continuous Hydrometer		a<CR><LF>
aXIS!	Set as Polled Hydrometer		a<CR><LF>
aXID!	Set as Debug Hydrometer		a<CR><LF>
aXOM!	Set as Continuous Wavemeter		a<CR><LF>
aXOS!	Set as Polled Wavemeter		a<CR><LF>
aXOD!	Set as Debug Wavemeter		a<CR><LF>
aXA<val>!	4-20mA test – Program the output to <val>	4000 - 20000µA	a<CR><LF>
aXB<val>!	4-20mA test – Program the output to <val>	-400000 to +8000000 mm	a<CR><LF>
aXEC!	Enable configuration modify		a<CR><LF>
aXDC!	Disable configuration modify		a<CR><LF>
aXZ<val>!	Set hydrometric reference	-400000 – +8000000 mm	a<CR><LF>
aXRS!	Reset command		a<CR><LF>
aXRF!	Reset to factory default		a<CR><LF>
aXWS!	Store parameters in flash		a<CR><LF>
aXGW!	Inclination calibration		a<x><y><z><CR><LF>

Registry write commands:

Command	Description	<val>	Default
aXWD00<val>!	Set the functional/operational mode	1 = Hydrometer Polled 2 = Hydrometer Continuous 3 = Hydrometer Debug 4 = Wavemeter Polled 5 = Wavemeter Continuous 6 = Wavemeter Debug	1
aXWD01<val>!	Set the Diagnostic Timeout	seconds (0 ... +9999)	10
aXWD02<val>!	Set DT (measure interval) in Continuous mode	seconds (0 ... +9999)	600
aXWD03<val>!	Set measure unit	0 = m 1 = ft	0
aXWD04<val>!	Set resolution	0 = 1/1000 1 = 1/100	1
aXWD05<val>!	Set measure mode	0 = distance 1 = level	0
aXWD06<val>!	Set Elementary measure – Minimum distance	mm (0 ... +65535)	1000
aXWD07<val>!	Set Elementary measure – Maximum distance	mm (0 ... +65535)	35000
aXWD08<val>!	Set Elementary measure – Minimum attention distance	mm (0 ... +65535)	0
aXWD09<val>!	Set Elementary measure – Maximum attention distance	mm (0 ... +65535)	1000
aXWD10<val>!	Set Elementary measure – Attenuation in range of attention distance	% (0 ... +999)	0
aXWD11<val>!	Set Hydrometric measure – Zero level	mm (-400000 ... +8000000)	0
aXWD12<val>!	Set Hydrometric measure – Number of elementary measures	n (+1 ... +99)	10
aXWD13<val>!	Set Wavemeter measure – Zero level	mm (-400000 ... +8000000)	0

Command	Description	<val>	Default
aXWD14<val>!	Set Wavemeter measure – Sample frequency	Hz (+1 ... +4)	4
aXWD15<val>!	Set Wavemeter measure – measurement duration	seconds (0 ... +9999)	290
aXWD16<val>!	Set analog measure – Hydrometer measure parameter	0 = Disabled 1 = Average 2 = Weighted average 3 = Median 4 = n.a. 5 = n.a. 6 = Max value 7 = Min value	0
aXWD17<val>!	Set analog measure – Wavemeter measure parameter	0 = Disabled 1 = Sea Mean 2 = Significant wave H. 3=n.a. 4 = Max Wave 5 = n.a.	0
aXWD18<val>!	Set writing enable time (0=always possible)	secondi (+1 ... +9999)	5
aXWD19<val>!	Set Min S/N valid measure	dB (0 .... 99)	5
aXWD20<val>!	Set SDI-12 address	value (0 ... 9)	0

Read commands

Command	Description	<val>
aXS!	Read the functional/operational mode	ms m = I = Hydrometer m = O = Wavemeter s = M = Continuous s = S = Polled s = D = Debug
aXG!	Execute inclination reading	a<x><y><z><CR><LF>

Registry read commands:

Command	Description	<val>
aXRD00!	Read the functional/operational mode	1 = Hydrometer Polled 2 = Hydrometer Continuous 3 = Hydrometer Debug 4 = Wavemeter Polled 5 = Wavemeter Continuous 6 = Wavemeter Debug
aXRD01!	Read the Diagnostic Timeout	seconds
aXRD02!	Read DT (DT = measure interval) in master mode	seconds
aXRD03!	Read measure unit	0 = m 1 = ft
aXRD04!	Read resolution	0 = 1/1000 1 = 1/100
aXRD05!	Read measure mode	0 = distance 1 = level
aXRD06!	Read Elementary measure – Minimum distance	mm
aXRD07!	Read Elementary measure – Maximum distance	mm
aXRD08!	Read Elementary measure – Minimum attention distance	mm
aXRD09!	Read Elementary measure – Maximum attention distance	mm
aXRD10!	Read Elementary measure – Attenuation in range of attention distance	%
aXRD11!	Read Hydrometric measure – Zero level	mm
aXRD12!	Read Hydrometric measure – Number of elementary measures	N
aXRD13!	Read Wavemeter measure – Zero level	mm
aXRD14!	Read Wavemeter measure – Sample frequency	Hz
aXRD15!	Read Wavemeter measure – measurement duration	seconds

Command	Description	<val>
aXRD16!	Read analog measure – Hydrometer measure parameter	0 = Disabled 1 = Mean 2 = Weighted mean 3 = Median 4 = n.a. 5 = n.a. 6 = Max value 7 = Min value
aXRD17!	Read analog measure – Wavemeter measure parameter	0 = Disabled 1 = Sea Mean 2 = Significant wave H. 3 = n.a. 4 = max Wave 5 = n.a.
aXRD18!	Read writing enable time	seconds
aXRD19!	Read Min S/N valid measure	dB
aXRD20!	Read SDI-12 Address	
aXRD21!	Read SDI-12 Protocol version	
aXRD22!	Read Manufacturer Name	8 ASCII
aXRD23!	Read Sensor model	6 ASCII
aXRD24!	Read Sensor version	3 ASCII
aXRD25!	Read SN sensor	13 ASCII

Page intentionally left blank

Page intentionally left blank

10. Appendix

10.1 Astronomy station location 44

10.1 Astronomy station location

Certain requirements for use outside closed vessels result from the radio license for Europe of CAE LPR. You can find the requirements in the "EC Conformity" chapter. Some of these requirements refer to radio astronomy stations. The following table states the geographic positions of radio astronomy stations in Europe:

Country	Name of the Station	Geographic Latitude	Geographic Longitude
Finland	Metsähovi	60°13'04'' N	24°23'37'' E
Finland	Tuorla	60°24'56'' N	24°26'31'' E
France	Plateau de Bure	44°38'01'' N	05°54'26'' E
France	Floirac	44°50'10'' N	00°31'37'' W
Germany	Effelsberg	50°31'32'' N	06°53'00'' E
Hungary	Penc	47°47'22'' N	19°16'53'' E
Italy	Medicina	44°31'14" N	11°38'49" E
Italy	Noto	36°52'34" N	14°59'21" E
Italy	Sardinia	39°29'50" N	09°14'40" E
Poland	Krakow- Fort Skala	50°03'18" N	19°49'36" E
Russia	Dmitrov	56°26'00" N	37°27'00" E
Russia	Kalyazin	57°13'22" N	37°54'01" E
Russia	Pushchino	54°49'00" N	37°40'00" E
Russia	Zelenchukskaya	43°49'53" N	41°35'32" E
Spain	Yebes	40°31'27" N	03°05'22" W
Spain	Robledo	40°25'38" N	04°14'57" W
Switzerland	Bleien	47°20'26" N	08°06'44" E
Sweden	Onsala	57°23'45" N	11°55'35" E
UK	Cambridge	52°09'59" N	00°02'20" E
UK	Darnhall	53°09'22" N	02°32'03" W
UK	Jodrell Bank	53°14'10" N	02°18'26" W

Country	Name of the Station	Geographic Latitude	Geographic Longitude
UK	Knockin	52°47’24” N	02°59’45” W
UK	Pickmere	53°17’18” N	02°26’38” W

Page intentionally left blank

CAE S.p.A.

http://www.cae.it