Test Laboratory: UnionTrust Date: 2019/1/11

System Check_H750

DUT: Dipole 750 MHz

Communication System: CW; Frequency: 750 MHz;Duty Cycle: 1:1
Medium: HSL750 Medium parameters used: f = 750 MHz; σ = 0.908 mho/m; ε_r = 40.5; ρ = 1000 kg/m^3

DASY Configuration:
- Probe: ES3DV3 - SN3090; ConvF(6.34, 6.34, 6.34); Calibrated: 2018/4/3
- Sensor-Surface: 3mm (Mechanical Surface Detection)
- Electronics: DAE4 Sn662; Calibrated: 2018/5/11
- Phantom: SAM 2; Type: QD 000 P40 CB; Serial: TP/1376
- ; Postprocessing SW: SEMCAD, V1.8 Build 186

system check/Area Scan (51x81x1): Measurement grid: dx=15mm, dy=15mm
Maximum value of SAR (interpolated) = 0.974 mW/g

system check/Zoom Scan (5x5x7)/Cube 0: Measurement grid: dx=8mm, dy=8mm, dz=5mm
Reference Value = 33.7 V/m; Power Drift = 0.001 dB
Peak SAR (extrapolated) = 1.35 W/kg
SAR(1 g) = 0.851 mW/g; SAR(10 g) = 0.544 mW/g
Maximum value of SAR (measured) = 1.01 mW/g

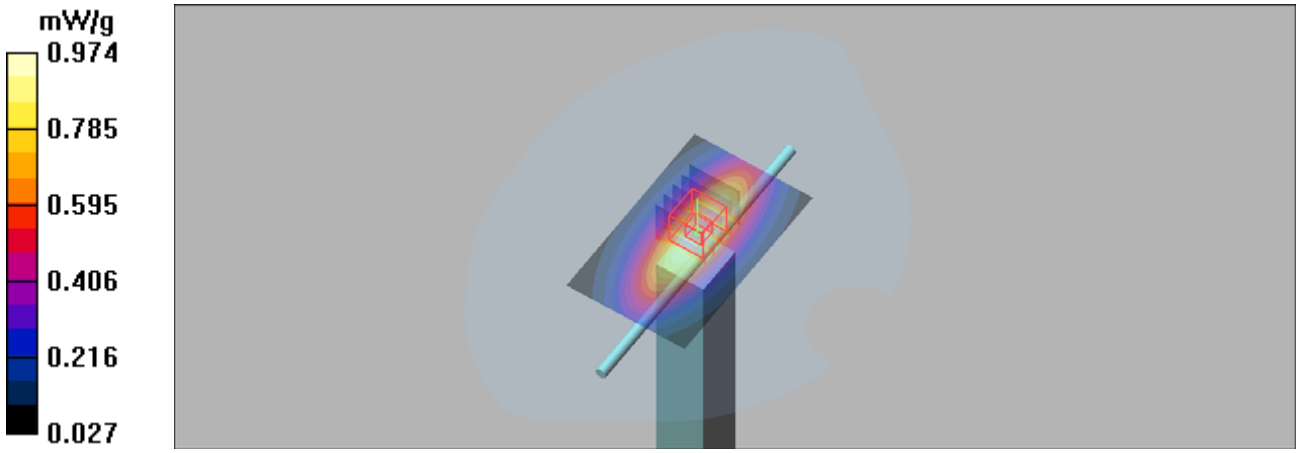

Test Laboratory: UnionTrust Date: 2019/1/15

System Check_H835

DUT: Dipole 835 MHz

Communication System: CW; Frequency: 835 MHz;Duty Cycle: 1:1
Medium: HSL835 Medium parameters used: f = 835 MHz; σ = 0.89 mho/m; ε_r = 42.4; ρ = 1000 kg/m^3

DASY Configuration:
- Probe: ES3DV3 - SN3090; ConvF(6.34, 6.34, 6.34); Calibrated: 2018/4/3
- Sensor-Surface: 3mm (Mechanical Surface Detection)
- Electronics: DAE4 Sn662; Calibrated: 2018/5/11
- Phantom: SAM 2; Type: QD 000 P40 CB; Serial: TP/1376
- ; Postprocessing SW: SEMCAD, V1.8 Build 186

system check/Area Scan (51x101x1): Measurement grid: dx=15mm, dy=15mm
Maximum value of SAR (interpolated) = 1.11 mW/g

system check/Zoom Scan (5x5x7)/Cube 0: Measurement grid: dx=8mm, dy=8mm, dz=5mm
Reference Value = 36.0 V/m; Power Drift = -0.014 dB
Peak SAR (extrapolated) = 1.52 W/kg
SAR(1 g) = 0.953 mW/g; SAR(10 g) = 0.603 mW/g
Maximum value of SAR (measured) = 1.13 mW/g

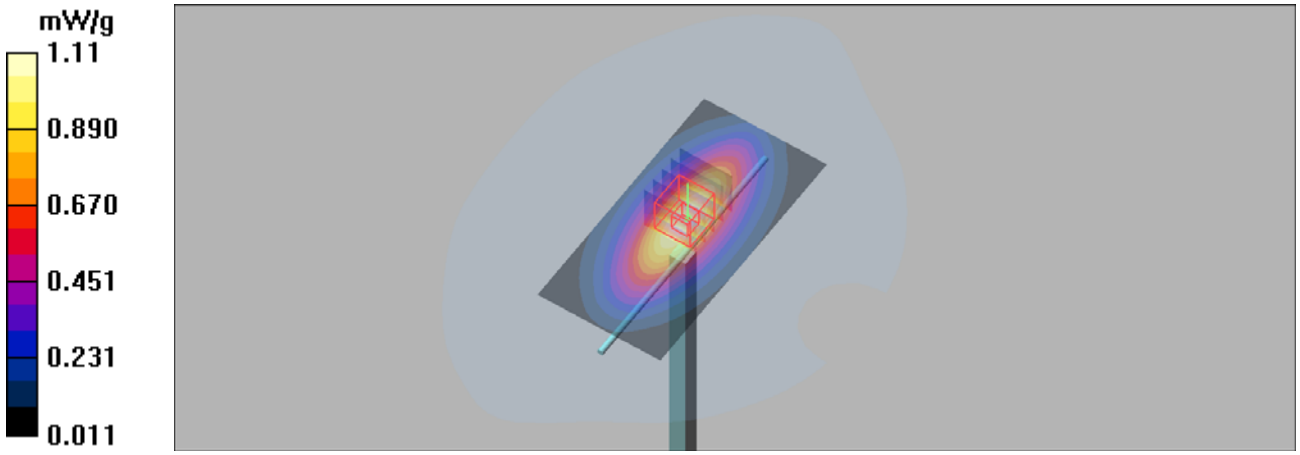

Test Laboratory: UnionTrust Date: 2019/1/10

System Check_H1800

DUT: Dipole 1800 MHz

Communication System: CW; Frequency: 1800 MHz;Duty Cycle: 1:1
Medium: HSL1800 Medium parameters used: f = 1800 MHz; σ = 1.43 mho/m; ε_r = 39.2; ρ = 1000 kg/m^3

DASY Configuration:
- Probe: ES3DV3 - SN3090; ConvF(5.3, 5.3, 5.3); Calibrated: 2018/4/3
- Sensor-Surface: 3mm (Mechanical Surface Detection)
- Electronics: DAE4 Sn662; Calibrated: 2018/5/11
- Phantom: SAM 2; Type: QD 000 P40 CB; Serial: TP/1376
- ; Postprocessing SW: SEMCAD, V1.8 Build 186

system check/Area Scan (51x71x1): Measurement grid: dx=15mm, dy=15mm
Maximum value of SAR (interpolated) = 5.53 mW/g

system check/Zoom Scan (5x5x7)/Cube 0: Measurement grid: dx=8mm, dy=8mm, dz=5mm
Reference Value = 52.6 V/m; Power Drift = 0.081 dB
Peak SAR (extrapolated) = 7.55 W/kg
SAR(1 g) = 4.08 mW/g; SAR(10 g) = 2.12 mW/g
Maximum value of SAR (measured) = 5.14 mW/g

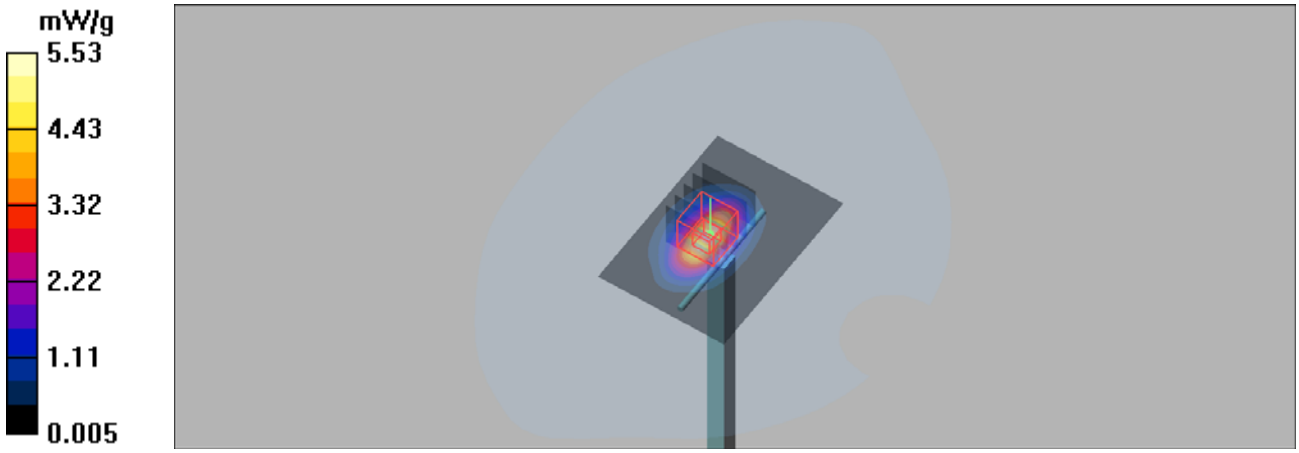

Test Laboratory: UnionTrust Date: 2019/1/16

System Check_H1900

DUT: Dipole 1900 MHz

Communication System: CW; Frequency: 1900 MHz;Duty Cycle: 1:1
Medium: HSL1900 Medium parameters used: f = 1900 MHz; σ = 1.45 mho/m; ε_r = 41.4; ρ = 1000 kg/m^3

DASY Configuration:
- Probe: ES3DV3 - SN3090; ConvF(4.92, 4.92, 4.92); Calibrated: 2018/4/3
- Sensor-Surface: 3mm (Mechanical Surface Detection)
- Electronics: DAE4 Sn662; Calibrated: 2018/5/11
- Phantom: SAM 2; Type: QD 000 P40 CB; Serial: TP/1376
- ; Postprocessing SW: SEMCAD, V1.8 Build 186

system check/Area Scan (51x71x1): Measurement grid: dx=15mm, dy=15mm
Maximum value of SAR (interpolated) = 5.73 mW/g

system check/Zoom Scan (5x5x7)/Cube 0: Measurement grid: dx=8mm, dy=8mm, dz=5mm
Reference Value = 59.3 V/m; Power Drift = -0.024 dB
Peak SAR (extrapolated) = 7.64 W/kg
SAR(1 g) = 3.95 mW/g; SAR(10 g) = 1.96 mW/g
Maximum value of SAR (measured) = 5.08 mW/g

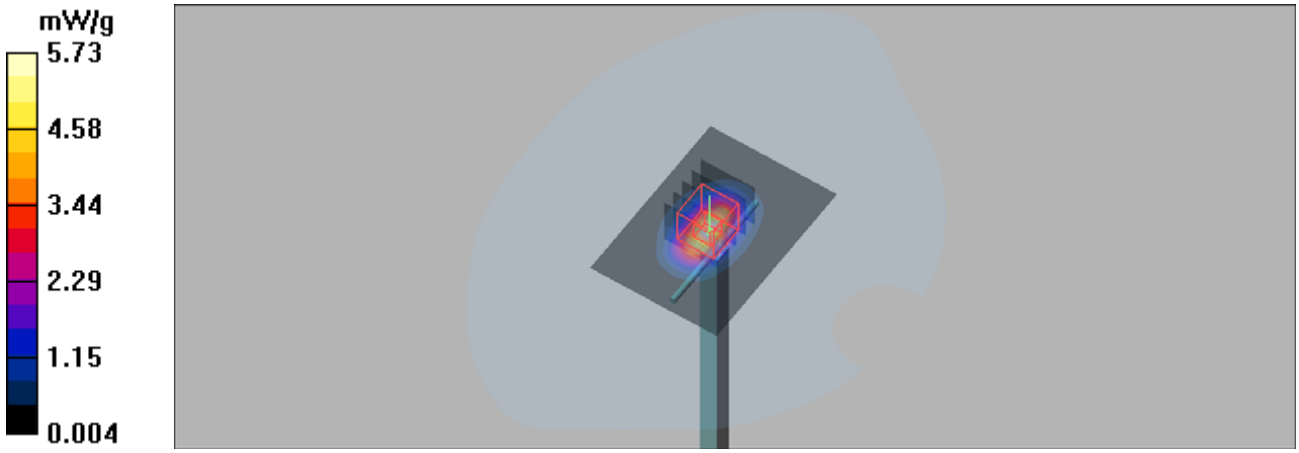

Test Laboratory: UnionTrust

Date: 2019/1/16

System Check_H2450

DUT: Dipole 2450 MHz

Communication System: CW; Frequency: 2450 MHz;Duty Cycle: 1:1
Medium: HSL2450 Medium parameters used: f = 2450 MHz; σ = 1.78 mho/m; ε_r = 40.2; ρ = 1000 kg/m^3

DASY Configuration:
- Probe: ES3DV3 - SN3090; ConvF(4.54, 4.54, 4.54); Calibrated: 2018/4/3
- Sensor-Surface: 3mm (Mechanical Surface Detection)
- Electronics: DAE4 Sn662; Calibrated: 2018/5/11
- Phantom: SAM 1; Type: QD 000 P40 CB; Serial: TP-1378
- ; Postprocessing SW: SEMCAD, V1.8 Build 186

system check/Area Scan (51x71x1): Measurement grid: dx=12mm, dy=12mm
Maximum value of SAR (interpolated) = 8.21 mW/g

system check/Zoom Scan (5x5x7)/Cube 0: Measurement grid: dx=8mm, dy=8mm, dz=5mm
Reference Value = 62.8 V/m; Power Drift = -0.052 dB
Peak SAR (extrapolated) = 11.5 W/kg
SAR(1 g) = 5.57 mW/g; SAR(10 g) = 2.59 mW/g
Maximum value of SAR (measured) = 7.14 mW/g

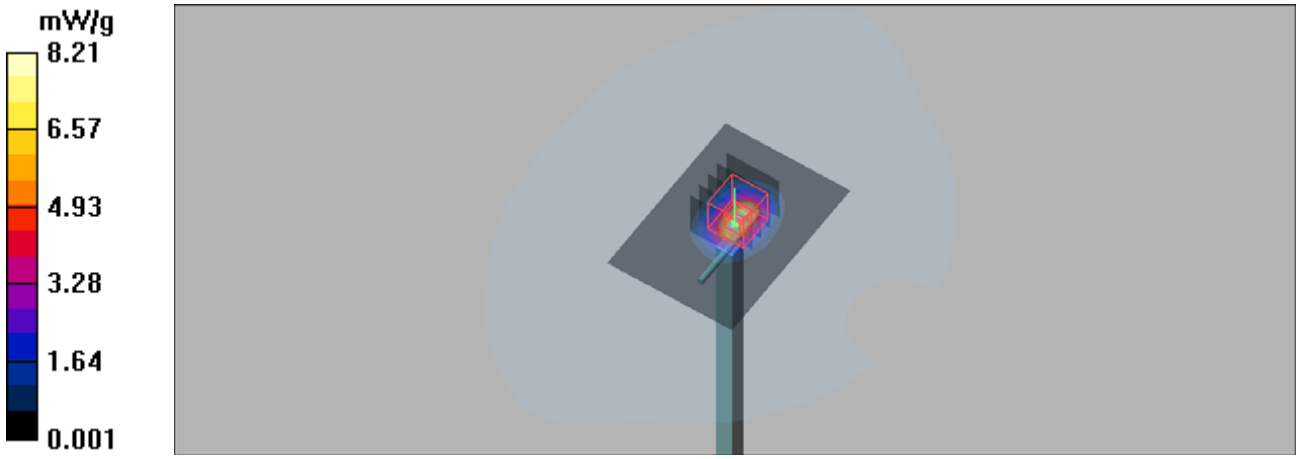

Test Laboratory: UnionTrust Date: 1/21/2019

System Check-D5GHz_5200Mhz_190121

DUT: Dipole D5GHzV2

Communication System: CW; Frequency: 5200 MHz;Duty Cycle: 1:1
Medium: H5G_0121 Medium parameters used: f = 5200 MHz; σ = 4.688 S/m; ε_r = 36.999; ρ = 1000 kg/m^3

DASY4 Configuration:
- Probe: EX3DV4 - SN7506; ConvF(5.65, 5.65, 5.65); Calibrated: 6/22/2018
- Sensor-Surface: 1.4mm (Mechanical Surface Detection)
- Electronics: DAE4 Sn1557; Calibrated: 6/5/2018
- Phantom: SAM 1; Type: QD 000 P40 CB; Serial: TP-1378
- ; Postprocessing SW: SEMCAD, V1.8 Build 186

Pin=100mW/Area Scan (91x91x1): Interpolated grid: dx=1.000 mm, dy=1.000 mm
Maximum value of SAR (interpolated) = 20.6 W/kg

Pin=100mW/Zoom Scan (8x8x7)/Cube 0: Measurement grid: dx=4mm, dy=4mm, dz=1.4mm
Reference Value = 74.73 V/m; Power Drift = -0.08 dB
Peak SAR (extrapolated) = 34.6 W/kg
SAR(1 g) = 8.24 W/kg; SAR(10 g) = 2.38 W/kg
Maximum value of SAR (measured) = 19.5 W/kg

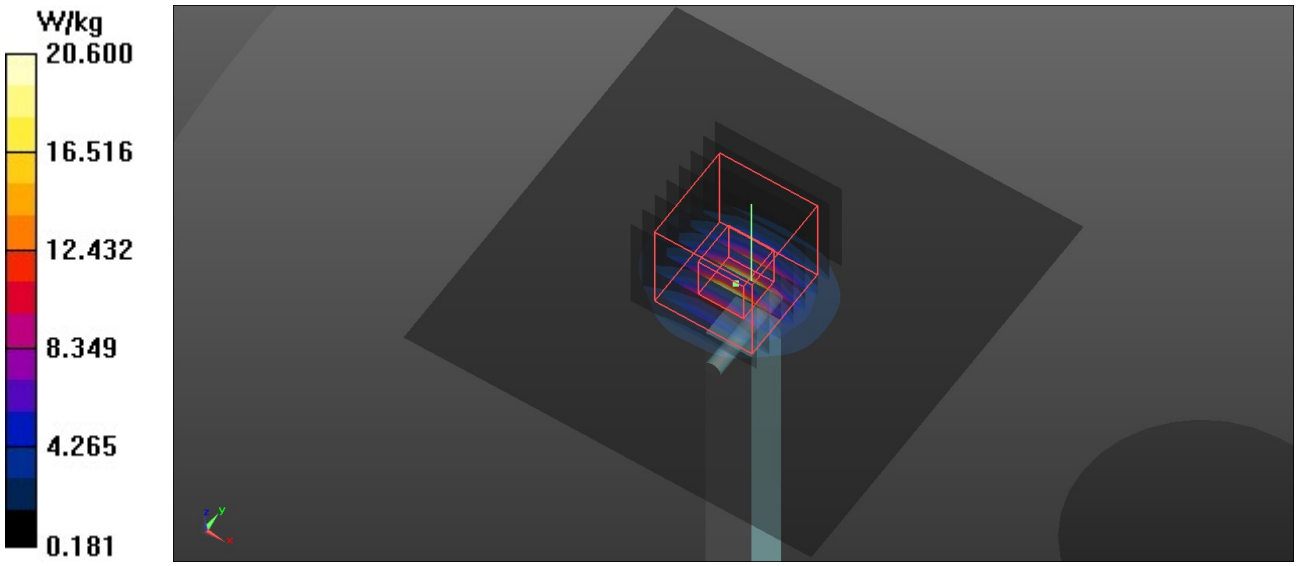

Test Laboratory: UnionTrust Date: 1/21/2019

System Check-D5GHz_5600Mhz_190121

DUT: Dipole D5GHzV2

Communication System: CW; Frequency: 5600 MHz;Duty Cycle: 1:1
Medium: H5G_0121 Medium parameters used: f = 5600 MHz; σ = 5.189 S/m; ε_r = 36.13; ρ = 1000 kg/m^3

DASY4 Configuration:
- Probe: EX3DV4 - SN7506; ConvF(4.96, 4.96, 4.96); Calibrated: 6/22/2018
- Sensor-Surface: 1.4mm (Mechanical Surface Detection)
- Electronics: DAE4 Sn1557; Calibrated: 6/5/2018
- Phantom: SAM 1; Type: QD 000 P40 CB; Serial: TP-1378
- ; Postprocessing SW: SEMCAD, V1.8 Build 186

Pin=100mW/Area Scan (91x91x1): Interpolated grid: dx=1.000 mm, dy=1.000 mm
Maximum value of SAR (interpolated) = 21.3 W/kg

Pin=100mW/Zoom Scan (8x8x7)/Cube 0: Measurement grid: dx=4mm, dy=4mm, dz=1.4mm
Reference Value = 72.76 V/m; Power Drift = 0.01 dB
Peak SAR (extrapolated) = 39.5 W/kg
SAR(1 g) = 8.76 W/kg; SAR(10 g) = 2.47 W/kg
Maximum value of SAR (measured) = 21.1 W/kg

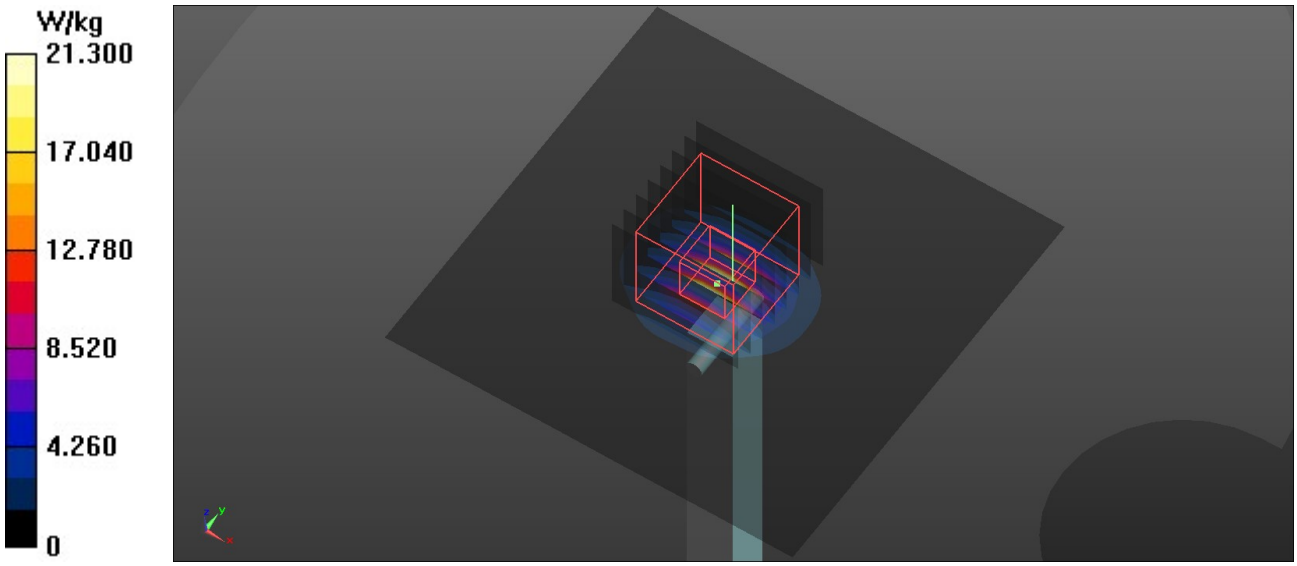

Test Laboratory: UnionTrust Date: 1/21/2019

System Check-D5GHz_5800Mhz_190121

DUT: Dipole D5GHzV2

Communication System: CW; Frequency: 5800 MHz;Duty Cycle: 1:1
Medium: H5G_0118 Medium parameters used: f = 5800 MHz; σ = 5.421 S/m; ε_r = 35.684; ρ = 1000 kg/m^3

DASY4 Configuration:
- Probe: EX3DV4 - SN7506; ConvF(5.1, 5.1, 5.1); Calibrated: 6/22/2018
- Sensor-Surface: 1.4mm (Mechanical Surface Detection)
- Electronics: DAE4 Sn1557; Calibrated: 6/5/2018
- Phantom: SAM 1; Type: QD 000 P40 CB; Serial: TP-1378
- ; Postprocessing SW: SEMCAD, V1.8 Build 186

Pin=100mW/Area Scan (91x91x1): Interpolated grid: dx=1.000 mm, dy=1.000 mm
Maximum value of SAR (interpolated) = 20.9 W/kg

Pin=100mW/Zoom Scan (8x8x7)/Cube 0: Measurement grid: dx=4mm, dy=4mm, dz=1.4mm
Reference Value = 70.04 V/m; Power Drift = 0.02 dB
Peak SAR (extrapolated) = 39.3 W/kg
SAR(1 g) = 8.32 W/kg; SAR(10 g) = 2.36 W/kg
Maximum value of SAR (measured) = 20.5 W/kg

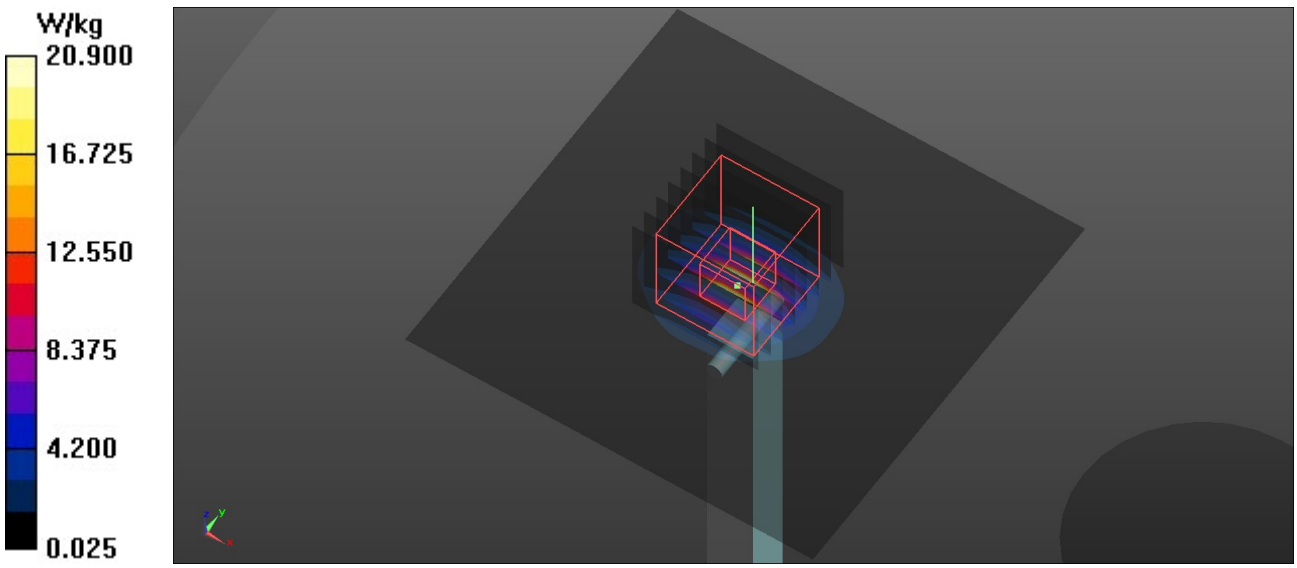

Test Laboratory: UnionTrust Date: 2019/1/8

System Check_B750

DUT: Dipole 750 MHz

Communication System: CW; Frequency: 750 MHz;Duty Cycle: 1:1
Medium: MSL750 Medium parameters used: f = 750 MHz; σ = 0.967 mho/m; ε_r = 55.3; ρ = 1000 kg/m^3

DASY Configuration:
- Probe: ES3DV3 - SN3090; ConvF(6.41, 6.41, 6.41); Calibrated: 2018/4/3
- Sensor-Surface: 3mm (Mechanical Surface Detection)
- Electronics: DAE4 Sn662; Calibrated: 2018/5/11
- Phantom: Triple Flat Phantom 5.1C; Type: QD 000 P51 CA; Serial: 1125
- ; Postprocessing SW: SEMCAD, V1.8 Build 186

system check/Area Scan (51x81x1): Measurement grid: dx=15mm, dy=15mm
Maximum value of SAR (interpolated) = 1.01 mW/g

system check/Zoom Scan (5x5x7)/Cube 0: Measurement grid: dx=8mm, dy=8mm, dz=5mm
Reference Value = 33.0 V/m; Power Drift = -0.03 dB
Peak SAR (extrapolated) = 1.35 W/kg
SAR(1 g) = 0.867 mW/g; SAR(10 g) = 0.563 mW/g
Maximum value of SAR (measured) = 1.02 mW/g

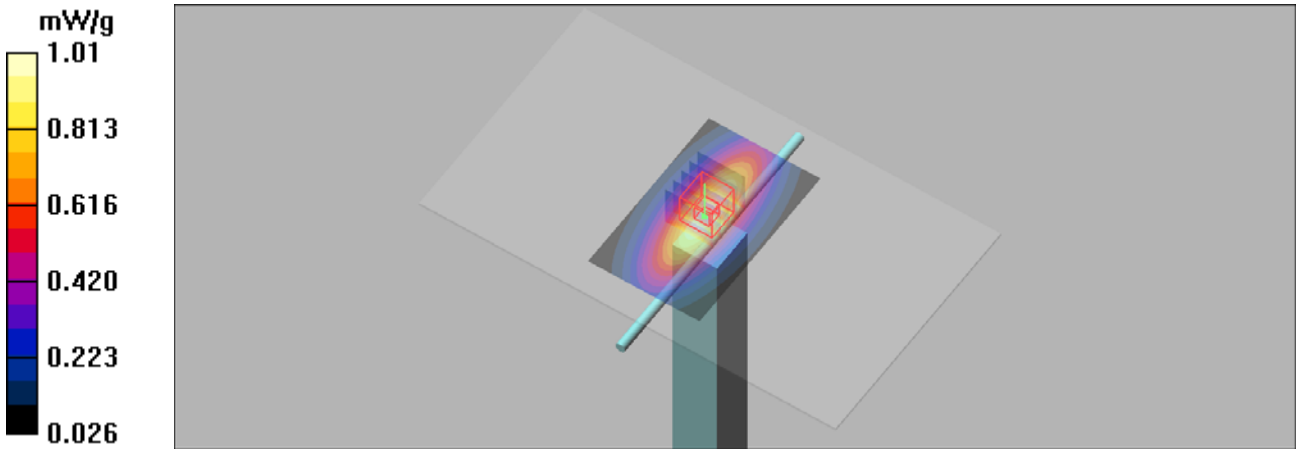

Test Laboratory: UnionTrust Date: 2019/1/9

System Check_B835

DUT: Dipole 835 MHz

Communication System: CW; Frequency: 835 MHz;Duty Cycle: 1:1
Medium: MSL835 Medium parameters used: f = 835 MHz; σ = 0.993 mho/m; ε_r = 57.1; ρ = 1000 kg/m^3

DASY Configuration:
- Probe: ES3DV3 - SN3090; ConvF(6.41, 6.41, 6.41); Calibrated: 2018/4/3
- Sensor-Surface: 3mm (Mechanical Surface Detection)
- Electronics: DAE4 Sn662; Calibrated: 2018/5/11
- Phantom: Triple Flat Phantom 5.1C; Type: QD 000 P51 CA; Serial: 1125
- ; Postprocessing SW: SEMCAD, V1.8 Build 186

system check/Area Scan (51x81x1): Measurement grid: dx=15mm, dy=15mm
Maximum value of SAR (interpolated) = 1.11 mW/g

system check/Zoom Scan (5x5x7)/Cube 0: Measurement grid: dx=8mm, dy=8mm, dz=5mm
Reference Value = 33.3 V/m; Power Drift = 0.011 dB
Peak SAR (extrapolated) = 1.47 W/kg
SAR(1 g) = 0.948 mW/g; SAR(10 g) = 0.612 mW/g
Maximum value of SAR (measured) = 1.11 mW/g

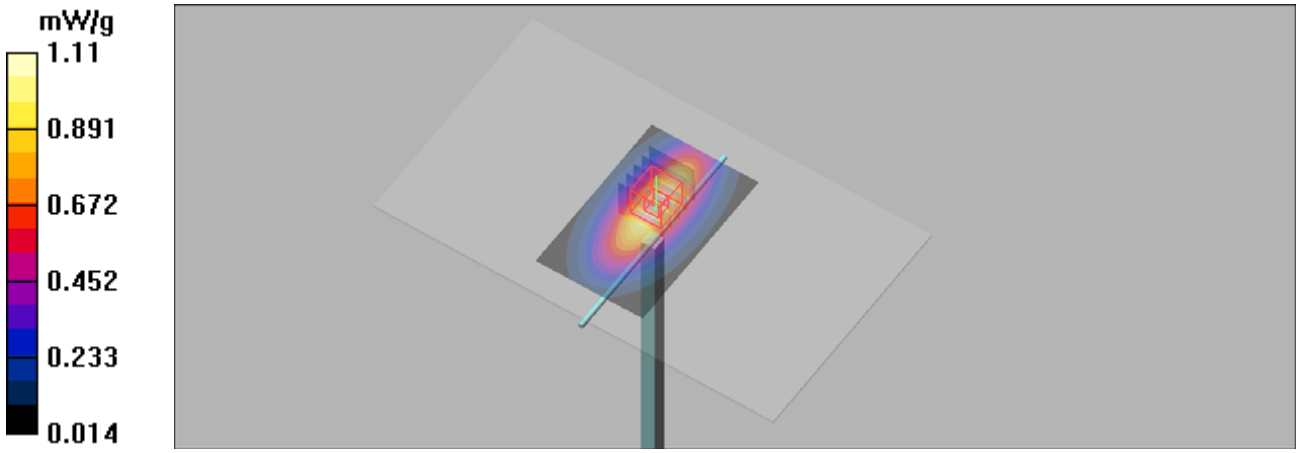

Test Laboratory: UnionTrust Date: 2019/1/7

System Check_B1800

DUT: Dipole 1800 MHz

Communication System: CW; Frequency: 1800 MHz;Duty Cycle: 1:1
Medium: MSL1800 Medium parameters used: f = 1800 MHz; σ = 1.54 mho/m; ε_r = 54.9; ρ = 1000 kg/m^3

DASY Configuration:
- Probe: ES3DV3 - SN3090; ConvF(4.95, 4.95, 4.95); Calibrated: 2018/4/3
- Sensor-Surface: 3mm (Mechanical Surface Detection)
- Electronics: DAE4 Sn662; Calibrated: 2018/5/11
- Phantom: SAM 1; Type: QD 000 P40 CB; Serial: TP-1378
- ; Postprocessing SW: SEMCAD, V1.8 Build 186

system check/Area Scan (51x71x1): Measurement grid: dx=15mm, dy=15mm
Maximum value of SAR (interpolated) = 5.96 mW/g

system check/Zoom Scan (5x5x7)/Cube 0: Measurement grid: dx=8mm, dy=8mm, dz=5mm
Reference Value = 59.0 V/m; Power Drift = -0.026 dB
Peak SAR (extrapolated) = 7.14 W/kg
SAR(1 g) = 4 mW/g; SAR(10 g) = 2.11 mW/g
Maximum value of SAR (measured) = 5.04 mW/g

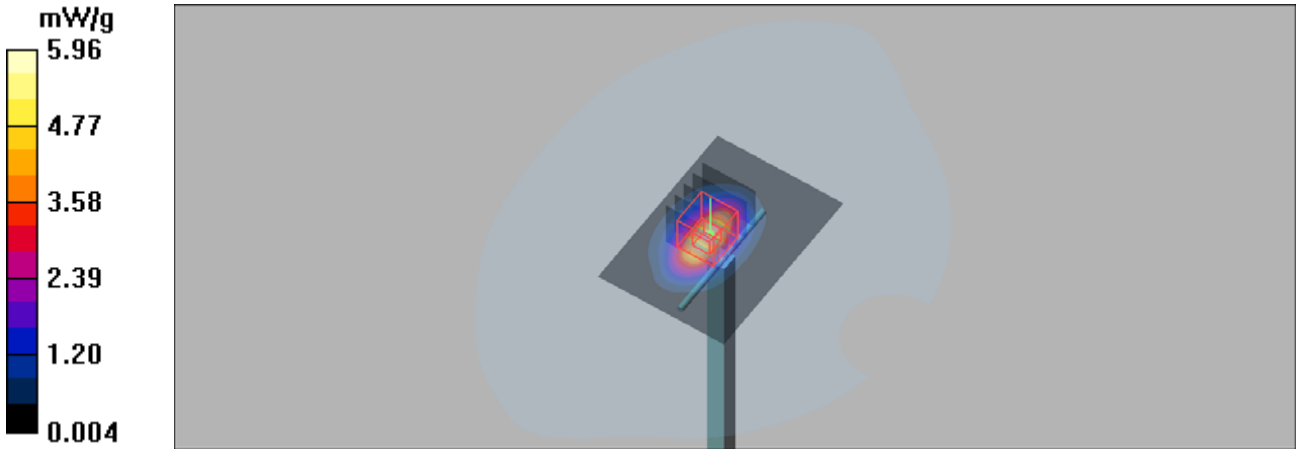

Test Laboratory: UnionTrust Date: 2019/1/7

System Check_B1900

DUT: Dipole 1900 MHz

Communication System: CW; Frequency: 1900 MHz;Duty Cycle: 1:1
Medium: MSL1900 Medium parameters used: f = 1900 MHz; σ = 1.55 mho/m; ε_r = 52.6; ρ = 1000 kg/m^3

DASY Configuration:
- Probe: ES3DV3 - SN3090; ConvF(4.48, 4.48, 4.48); Calibrated: 2018/4/3
- Sensor-Surface: 3mm (Mechanical Surface Detection)
- Electronics: DAE4 Sn662; Calibrated: 2018/5/11
- Phantom: SAM 1; Type: QD 000 P40 CB; Serial: TP-1378
- ; Postprocessing SW: SEMCAD, V1.8 Build 186

system check/Area Scan (51x71x1): Measurement grid: dx=15mm, dy=15mm
Maximum value of SAR (interpolated) = 6.47 mW/g

system check/Zoom Scan (5x5x7)/Cube 0: Measurement grid: dx=8mm, dy=8mm, dz=5mm
Reference Value = 60.7 V/m; Power Drift = 0.001 dB
Peak SAR (extrapolated) = 7.91 W/kg
SAR(1 g) = 4.33 mW/g; SAR(10 g) = 2.23 mW/g
Maximum value of SAR (measured) = 5.53 mW/g

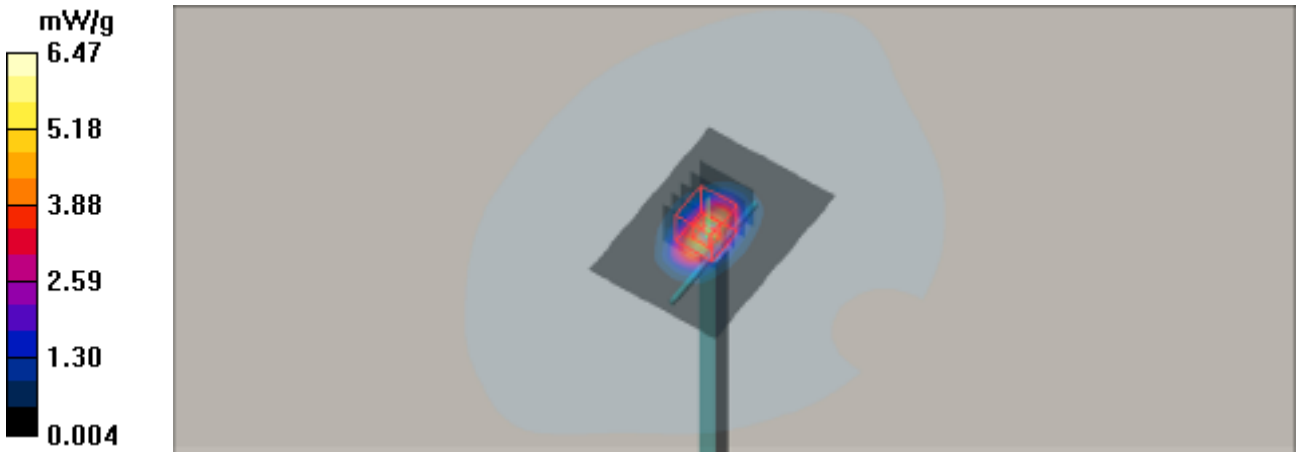

Test Laboratory: UnionTrust Date: 2019/1/16

System Check_B2450

DUT: Dipole 2450 MHz

Communication System: CW; Frequency: 2450 MHz;Duty Cycle: 1:1
Medium: MSL2450 Medium parameters used: f = 2450 MHz; σ = 2.02 mho/m; ε_r = 52.9; ρ = 1000 kg/m^3

DASY Configuration:
- Probe: ES3DV3 - SN3090; ConvF(4.43, 4.43, 4.43); Calibrated: 2018/4/3
- Sensor-Surface: 3mm (Mechanical Surface Detection)
- Electronics: DAE4 Sn662; Calibrated: 2018/5/11
- Phantom: SAM 2; Type: QD 000 P40 CB; Serial: TP-1376
- ; Postprocessing SW: SEMCAD, V1.8 Build 186

system check/Area Scan (51x71x1): Measurement grid: dx=12mm, dy=12mm
Maximum value of SAR (interpolated) = 8.29 mW/g

system check/Zoom Scan (5x5x7)/Cube 0: Measurement grid: dx=8mm, dy=8mm, dz=5mm
Reference Value = 60.5 V/m; Power Drift = -0.060 dB
Peak SAR (extrapolated) = 11.4 W/kg
SAR(1 g) = 5.47 mW/g; SAR(10 g) = 2.52 mW/g
Maximum value of SAR (measured) = 7.10 mW/g

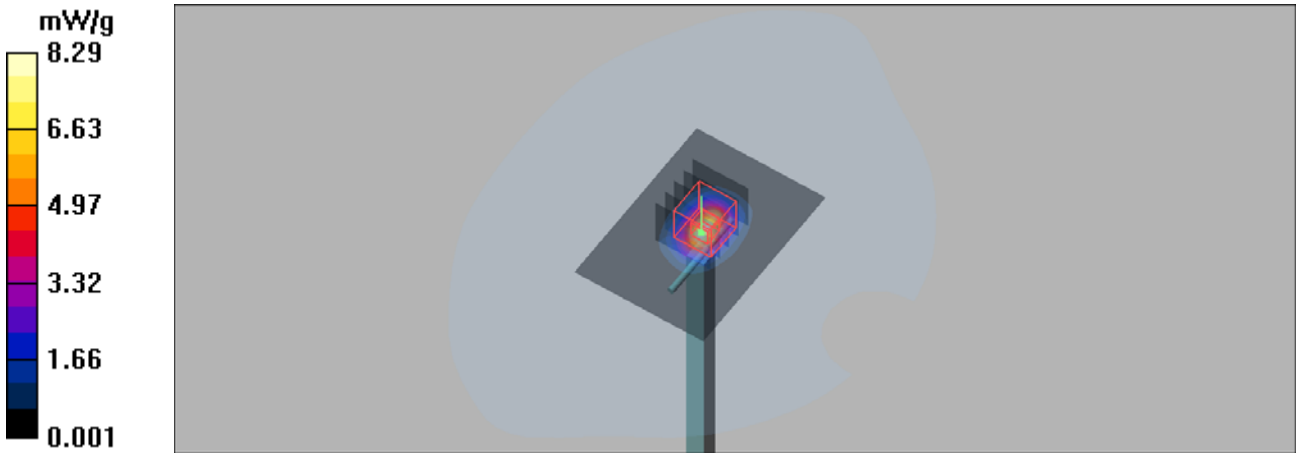

Test Laboratory: UnionTrust Date: 1/20/2019

System Check-D5GHz_5200Mhz_190120

DUT: Dipole D5GHzV2

Communication System: CW; Frequency: 5200 MHz;Duty Cycle: 1:1
Medium: B5G_0120 Medium parameters used: f = 5200 MHz; σ = 5.48 S/m; ε_r = 48.358; ρ = 1000 kg/m^3

DASY4 Configuration:
- Probe: EX3DV4 - SN7506; ConvF(5.09, 5.09, 5.09); Calibrated: 6/22/2018
- Sensor-Surface: 1.4mm (Mechanical Surface Detection)
- Electronics: DAE4 Sn1557; Calibrated: 6/5/2018
- Phantom: SAM 1; Type: QD 000 P40 CB; Serial: TP-1378
- ; Postprocessing SW: SEMCAD, V1.8 Build 186

Pin=100mW/Area Scan (91x91x1): Interpolated grid: dx=1.000 mm, dy=1.000 mm
Maximum value of SAR (interpolated) = 20.8 W/kg

Pin=100mW/Zoom Scan (8x8x7)/Cube 0: Measurement grid: dx=4mm, dy=4mm, dz=1.4mm
Reference Value = 74.22 V/m; Power Drift = -0.08 dB
Peak SAR (extrapolated) = 32.1 W/kg
SAR(1 g) = 7.66 W/kg; SAR(10 g) = 2.29 W/kg
Maximum value of SAR (measured) = 20.5 W/kg

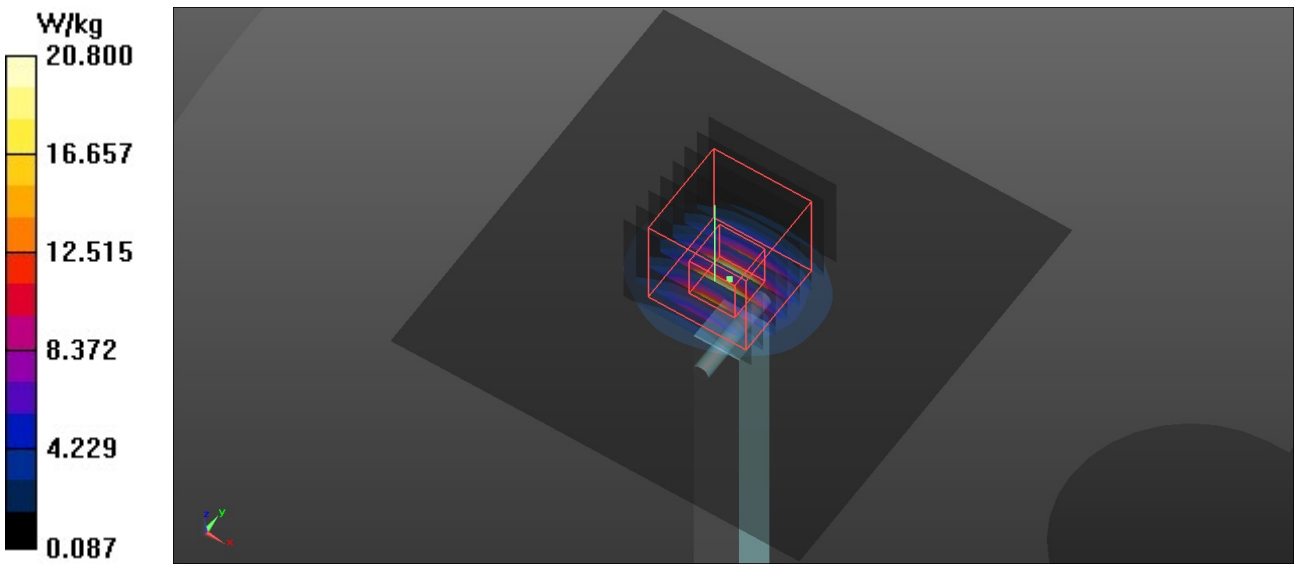

Test Laboratory: UnionTrust Date: 1/20/2019

System Check-D5GHz_5600Mhz_190120

DUT: Dipole D5GHzV2

Communication System: CW; Frequency: 5600 MHz;Duty Cycle: 1:1
Medium: B5G_0120 Medium parameters used: f = 5600 MHz; σ = 6.011 S/m; ε_r = 47.673; ρ = 1000 kg/m^3

DASY4 Configuration:
- Probe: EX3DV4 - SN7506; ConvF(4.25, 4.25, 4.25); Calibrated: 6/22/2018
- Sensor-Surface: 1.4mm (Mechanical Surface Detection)
- Electronics: DAE4 Sn1557; Calibrated: 6/5/2018
- Phantom: SAM 1; Type: QD 000 P40 CB; Serial: TP-1378
- ; Postprocessing SW: SEMCAD, V1.8 Build 186

Pin=100mW/Area Scan (91x91x1): Interpolated grid: dx=1.000 mm, dy=1.000 mm
Maximum value of SAR (interpolated) = 26.0 W/kg

Pin=100mW/Zoom Scan (8x8x7)/Cube 0: Measurement grid: dx=4mm, dy=4mm, dz=1.4mm
Reference Value = 78.60 V/m; Power Drift = 0.04 dB
Peak SAR (extrapolated) = 43.8 W/kg
SAR(1 g) = 7.85 W/kg; SAR(10 g) = 2.23 W/kg
Maximum value of SAR (measured) = 25.8 W/kg

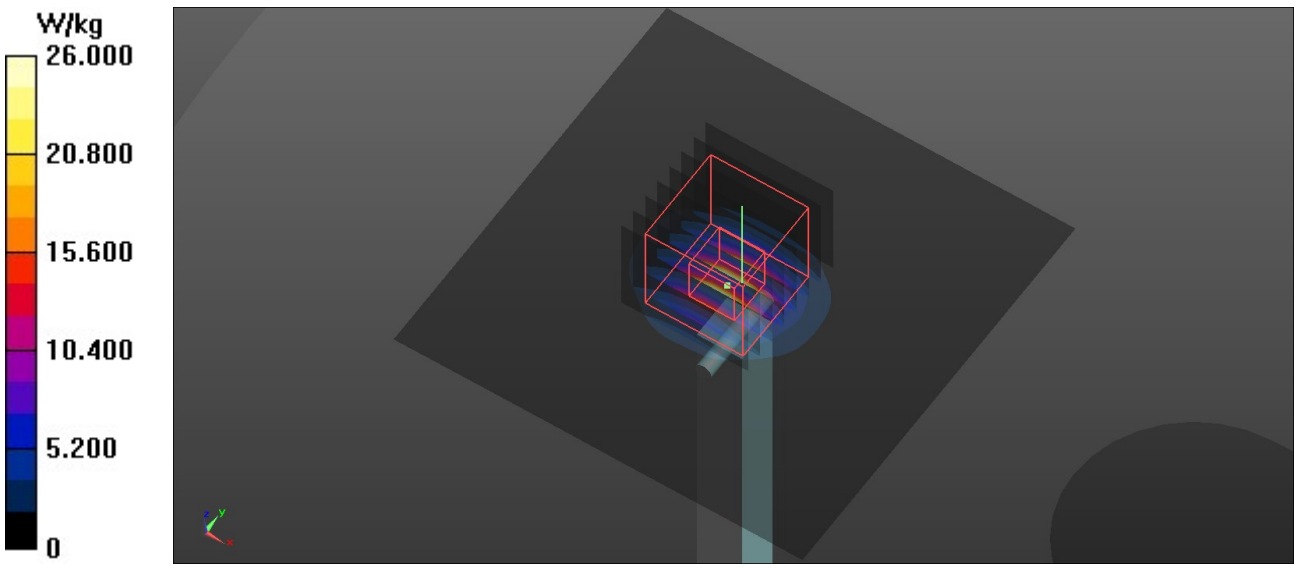

Test Laboratory: UnionTrust Date: 1/20/2019

System Check-D5GHz_5800Mhz_190120

DUT: Dipole D5GHzV2

Communication System: CW; Frequency: 5800 MHz;Duty Cycle: 1:1
Medium: B5G_0120 Medium parameters used: f = 5800 MHz; σ = 6.287 S/m; ε_r = 47.348; ρ = 1000 kg/m^3

DASY4 Configuration:
- Probe: EX3DV4 - SN7506; ConvF(4.31, 4.31, 4.31); Calibrated: 6/22/2018
- Sensor-Surface: 1.4mm (Mechanical Surface Detection)
- Electronics: DAE4 Sn1557; Calibrated: 6/5/2018
- Phantom: SAM 1; Type: QD 000 P40 CB; Serial: TP-1378
- ; Postprocessing SW: SEMCAD, V1.8 Build 186

Pin=100mW/Area Scan (91x91x1): Interpolated grid: dx=1.000 mm, dy=1.000 mm
Maximum value of SAR (interpolated) = 24.8 W/kg
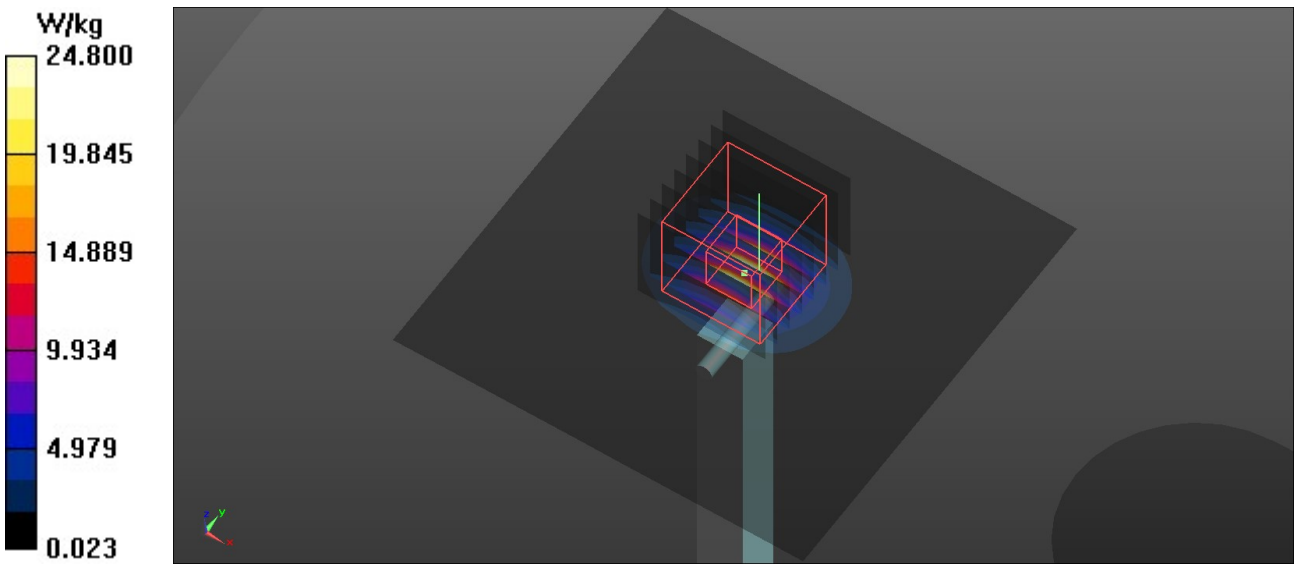
Pin=100mW/Zoom Scan (8x8x7)/Cube 0: Measurement grid: dx=4mm, dy=4mm, dz=1.4mm
Reference Value = 72.62 V/m; Power Drift = 0.02 dB
Peak SAR (extrapolated) = 44.6 W/kg
SAR(1 g) = 7.61 W/kg; SAR(10 g) = 2.18 W/kg
Maximum value of SAR (measured) = 25.6 W/kg