VIVITAR®

User's Manual

Item VXXBR10

WARNING

To reduce the risk of fire or electric shock,

1.) Do not expose the unit to rain or moisture.
2.) Do not place objects filled with liquids, such as vases, on the apparatus.
3.)Do not expose the batteries to excessive heat, sunlight, smoke, fire or flames.

Do not ingest battery; chemical burn hazard.
The camera contains an external lithium ion battery. If swallowed, it can cause severe internal burns in just 2 hours and can lead to death.
Keep new and used batteries away from children. If the battery compartment does not close securely, stop using the product and keep it away from children. If you think batteries might have been swallowed or placed inside any part of the body, seek immediate medical attention.

CAUTION

If the battery is mishandled, the battery pack can burst, cause a fire or even chemical burns. Observe the following cautions:
Do not disassemble.
Do not crush and do not expose the battery pack to any shock or force such as hammering, dropping or stepping on it.
Do not short circuit and do not allow metal objects to come into contact with the battery terminals.
Do not expose to high temperature above 60°C (140°F) such as in direct sun light or in a car parked in the sun.
Do not incinerate or dispose of in fire.
Do not handle damaged or leaking lithium ion batteries.
Keep the battery pack out of the reach of small children.
Keep the battery pack dry.
Replace the battery with the specific type only. Otherwise, bursting, fire or injury may result.
Dispose of used batteries according to the instruction.

Use a nearby wall outlet(wall socket) when using the AC Adapter/Battery charger. If any malfunction occurs, disconnect the plug from the wall outlet (wall socket) immediately to disconnect from the power source. If you use the product with a charge lamp, note that the product is not disconnected from the power source even when the lamp turns off.

Do not use the AC adapter/Battery charger placed in a narrow space, such as between a wall and furniture.

If static electricity or electromagnetism cause data transfer to discontinue midway (fair), restart the application or disconnect and connect the communication cable (USB, etc.) again.

Table of Contents

A Quick Look at your Camcorder 3-4

Button Functions 5

Battery Installation/Removal 6

Charging Batteries 6

Powering On & Off 7

Preview Screen 8-9

Camera Settings 9

Available System Settings 10-12

Insert and Format the Memory Card 13

Using the Camera 14-16

Playback in HDTV 17

Connect to Computer 18

Connect to the App 19

Troubleshooting 20

FCC Compliance Statement 21

Vivitar Warranty Card 22

Closer Look

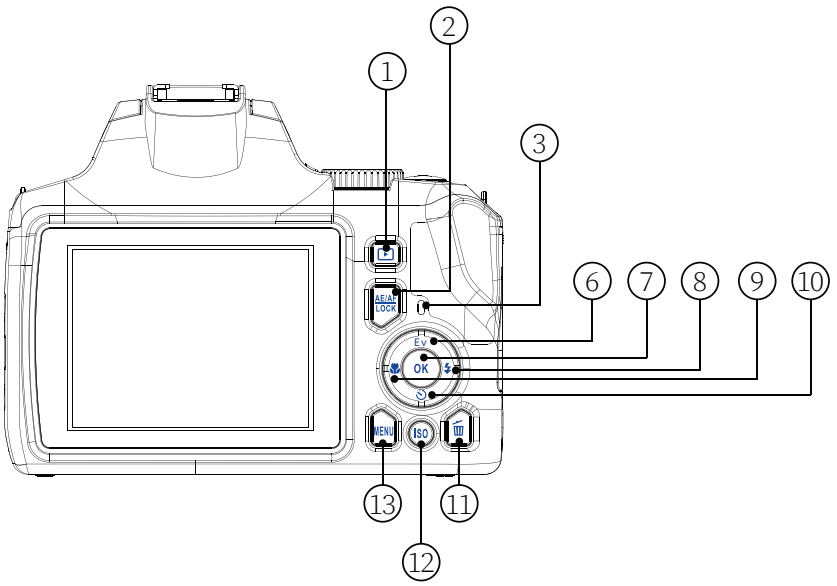

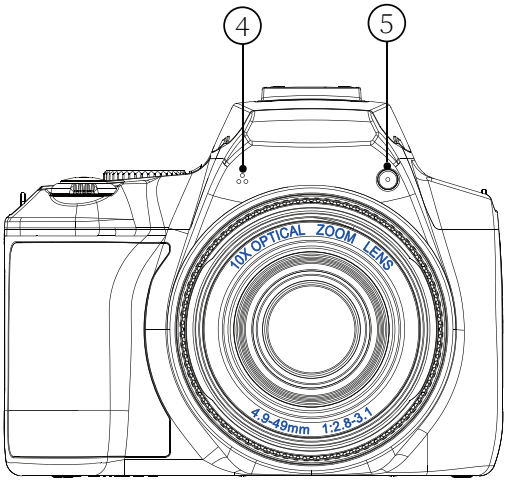

1) Playback
2) AE/AF
3) Indicator light
4) Microphone (MIC)
5) Auxillary Focus Light
6) Up/EV Button
7) Confirm
8) Right/Flash Button
9) Left/Macro Button
10) Down/Timer Button
11) ISO Shortcut Button
12) Delete
13) Menu

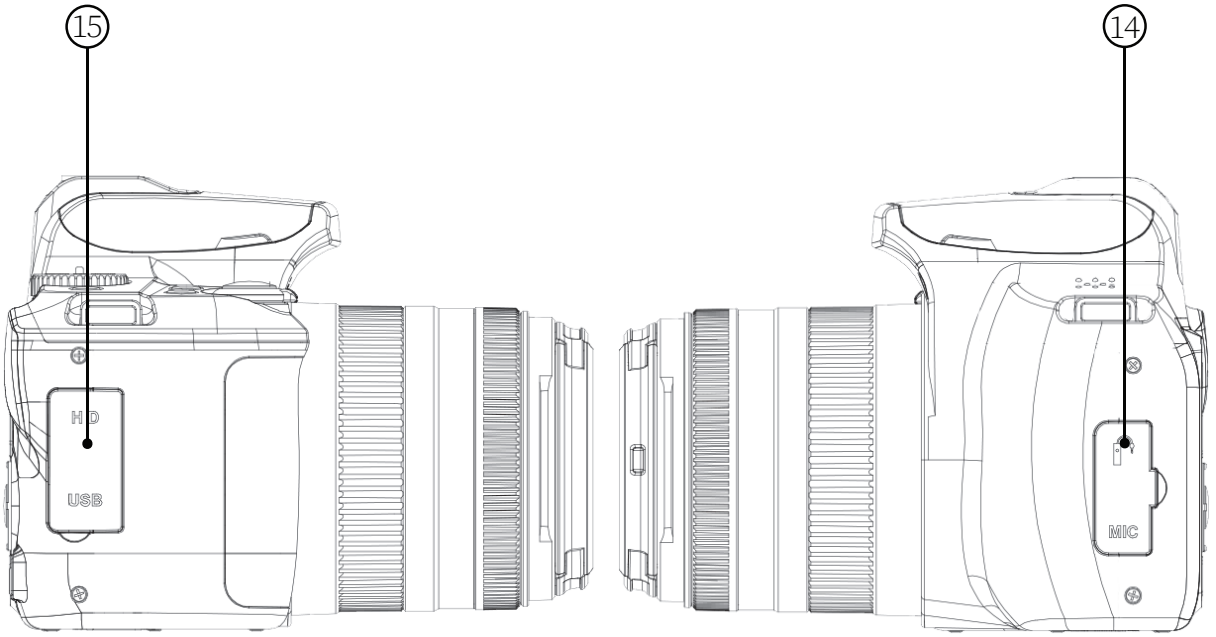

15) Type-C/HDMI Ports

14) MIC interface

Closer Look (cont.)

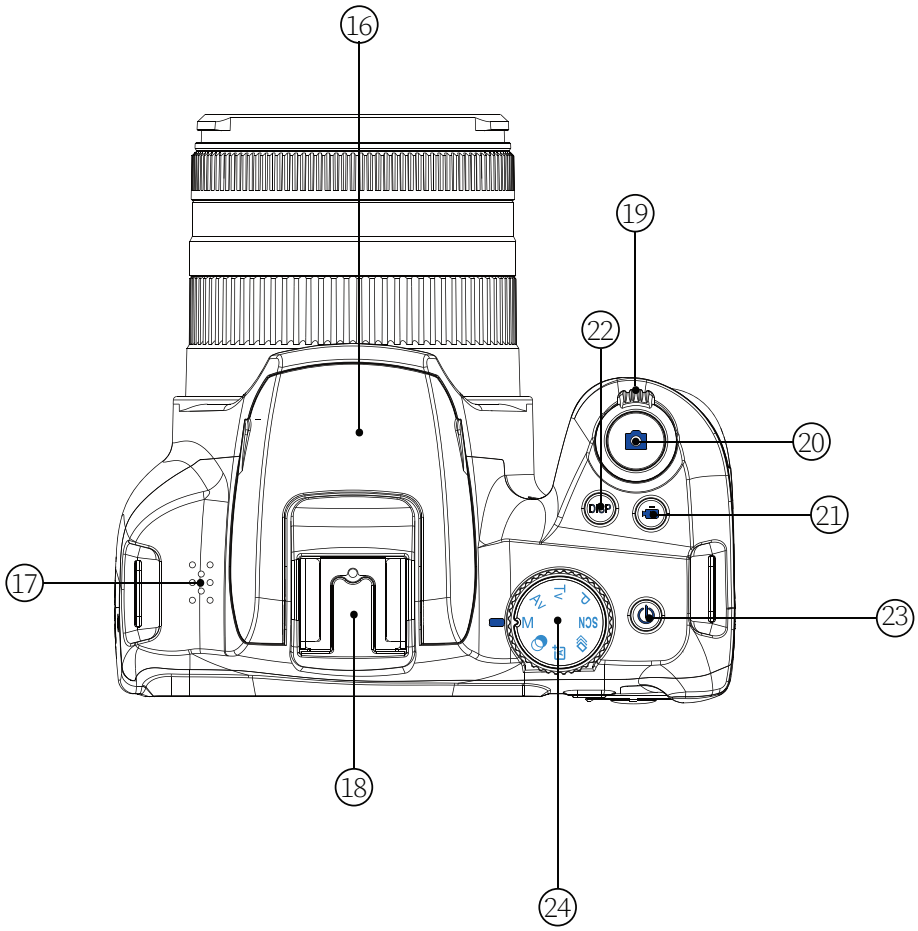

16) Flash
17) Speaker
18) Cold Shoe
19) T/W
20) Shutter Button
21) Record Button
22) DISP Button
23) Power Button
24) Mode Dial

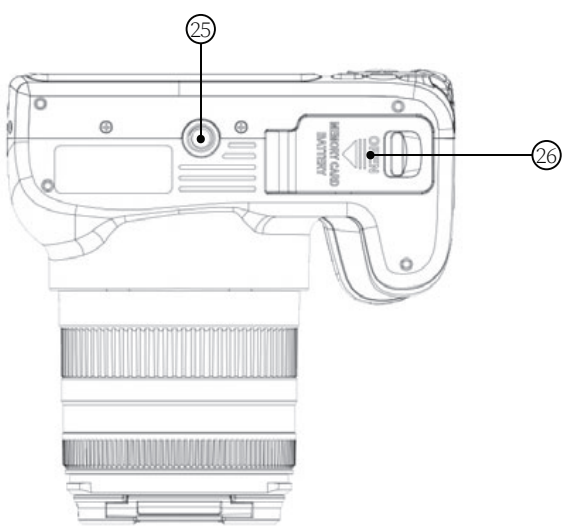

25) Tripod Mounting Hole
26) Battery and SD Card Slot

Buttons/ Indicators	Functions
Playback	Open/Exit Media Playback
AE/AF	Lock Auto Exposure(AE) and Auto Focus(AF)
Indicator light	Working / Charging Indicator Light
Up/EV Button	Open Exposure Value(EV) Interface
	Upward
	Pause & Play During Recording
Confirm	Confirm
Right/Flash Button	Open Flash Settings Interface
	Rightward
Left/Macro Button	Open Macro Settings Interface
	Leftward
Down/Timer Button	Open Timer Settings Interface
	Downward
ISO Shortcut Button	Open ISO Settings Interface
Delete	Open Delete Interface
	Delete in Playback Mode
Menu	Open / Close Menu Settings
Cold shoe	Base for holding remote flash units
MIC interface	External microphone interface(3.5mm)
T/W	Zoom IN/OUT
Shutter Button	Capture Photo
Record Button	Record a Video
DISP Button	Cycle Through Display Modes
Type-C/HDMI Ports	Mini HDMI Interface (HDMI cable not included)
	USB Cable Charging
	Connect the Computer with USB Cable
Power Button	Power On/Off

Battery Installation/Removal

This camera uses a high capacity rechargeable external lithium battery(NP-40).

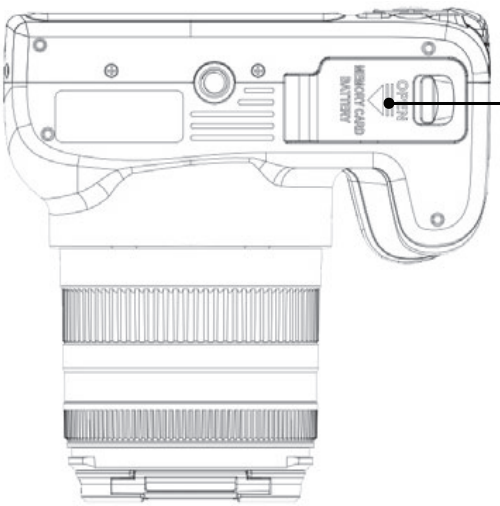

Slide the Memory Card/Battery Cover open. Carefully insert the battery with the polarity icons matching those found inside of the battery opening. The battery is secure when you hear a click.

Charging the Battery

Connect one end of the charging cable to the charging port located at the side of the camera. Connect the other end of the cable into a suitable USB power adapter.

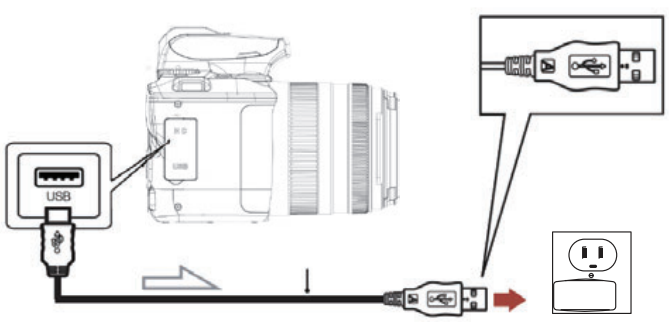

The Camera Indicator light will light up red while charging. When charging is complete the light will turn off. Charging can take approximately 2-3 hours.

NOTE: When the camera is not in use for an extended period of time it is recommended to charge the battery every 3 months. Then discharge the battery to maintain battery life

Powering On the Camera

Press the power button to turn the camera On and Off.

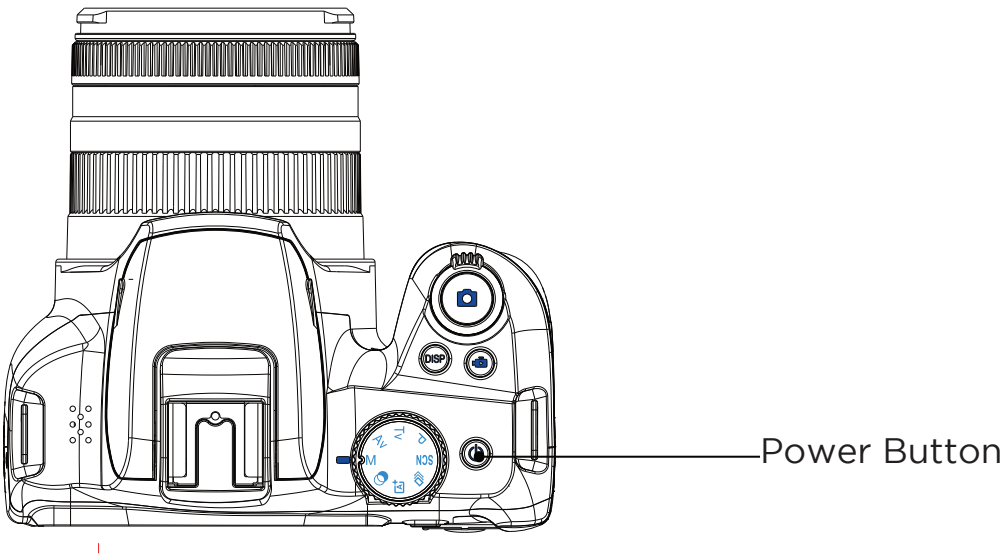

Note: When turning the camera On for the first time press and hold the power button to turn it On.

When removing an external battery note that after every installation to turn On the camera you must press and hold the power button.

Preview Screen

After turning on the camera the preview screen will be displayed. Below is an example preview screen.

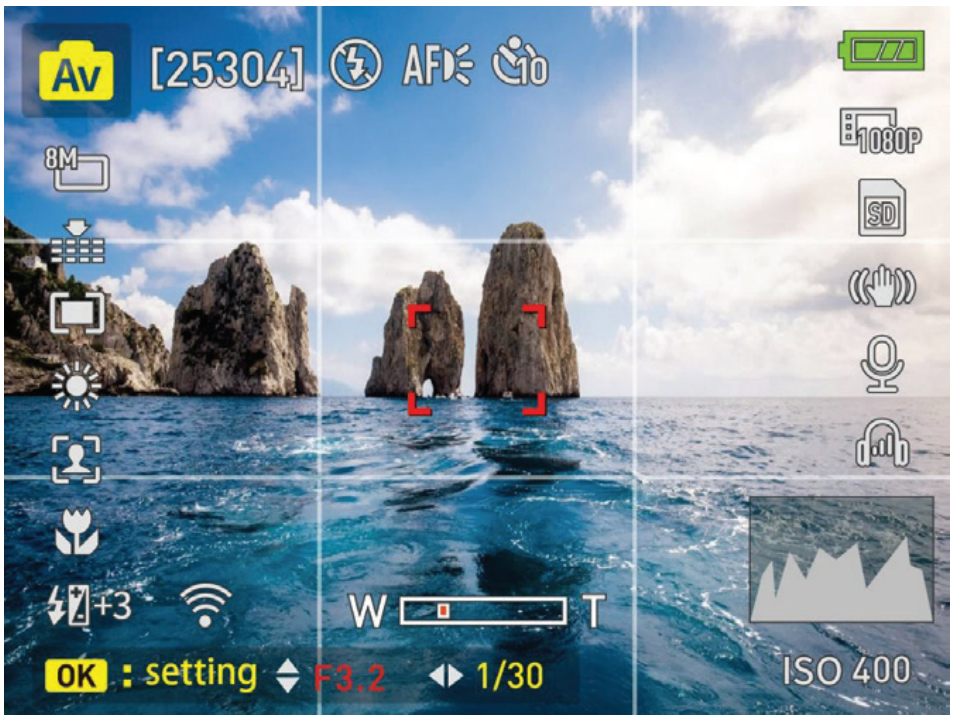

【[25304]】 This number Indicates the current space available inside the inserted SD card for photos. It counts down as space is used.

【 】 This icon shows the current timer for photos. In timed photography mode, using the timer shortcut key opens the timer options. In timer options there are four choices: Off, 2 seconds, 5 seconds, and 10 seconds. Off is the default setting. Whenever you change modes or perform another operation, any changes to the setting will revert back to Off.

【 】 This icon shows the EV (Exposure Value). Using the EV value shortcut key opens the EV value options. There are seven choices for EV value. +3.0, +2.0, +1.0, +0.0, -1.0, -2.0, -3.0. The default is set to +0.0.

【 】 This icon shows the current focus setting. Using the Macro shortcut key opens the focus options. There are four choices for focus. Macro (Auto), Macro (Manual), AF (Auto Focus), MF (Manual Focus).

Preview Screen (cont.)

This icon shows the current flash setting. Using the Flash shortcut key opens the flash options. There are five choices for focus. Auto, Red-eye Reduction, Forced Flash, Slow Sync, No Forced Flash. The default is set to No forced Flash. Make sure any connected Flash Devices are turned on before use.

This icon shows the current SD card status. There are three states: Inserted, Not Inserted, and Write Protection. Inserted and Not Inserted indicate if the SD card is currently inside the camera or not. Write Protection indicates that the currently inserted SD Card is write-protected, preventing any modifications to the card.

Camera Settings

You can make custom settings for the camera.
After the camera is turned on, press the menu button to open the menu.
The menu will start under Photo Settings. To move to Video and System settings press the Right/Flash key.

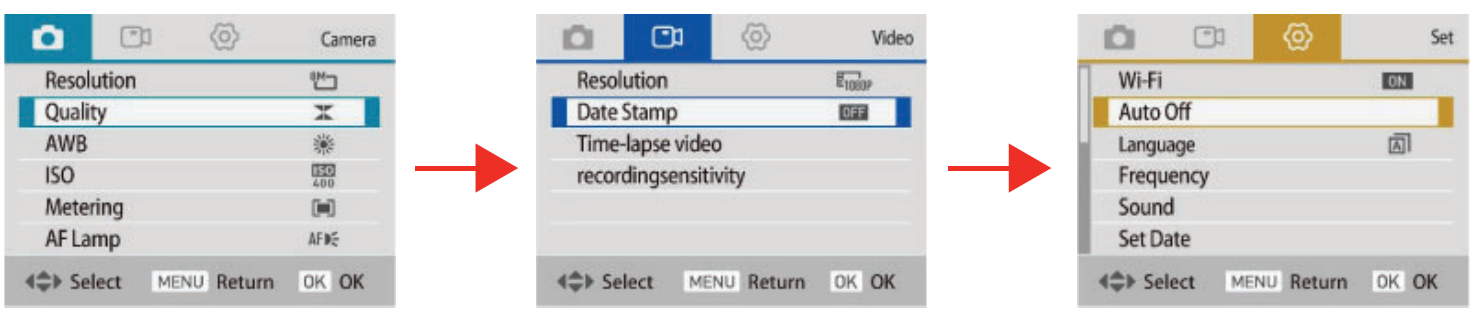

Note: Settings differ depending on the current mode selected on the mode dial.

Available System Settings

Photography Settings:

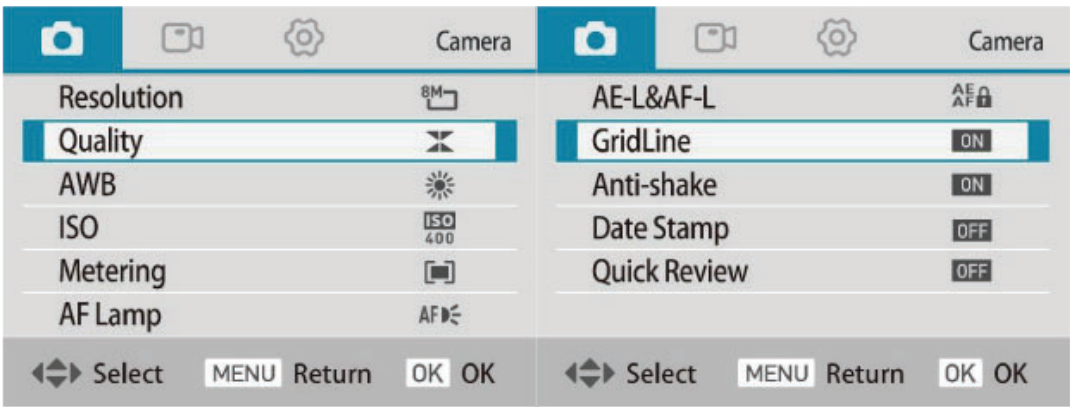

Sub-Menu	Menu Content
Resolution	64M (9200*6900), 32M (6480*4860), 16M (4608*3456), 8M (3264*2448)
Quality	Super Fine, Fine, Normal
AWB	Auto, Daylight, Cloudy, Tungsten, Fluorescent
ISO	Auto, ISO100, ISO200, ISO400, ISO800, ISO1600, ISO3200
Metering	Multi, Center, Spot Model
AF Lamp	Auto, Turn On/Turn Off
AE-L&AF-L	AE-L (Auto Exposure Lock), AF-L (Auto Focus Lock), and AE-L&AF-L (Auto Exposure and Auto Focus Lock)
GridLine	Turn On/Turn Off
Anti-shake	Turn On/Turn Off
Date Stamp	Turn On/Turn Off
Quick Review	Off, 2 seconds, 5 seconds
Color	Only available in Filter mode. Provides 13 color options
Scene Selection	Only available in Scene mode. Provides 10 scene modes

Available System Settings (cont.)

Video Settings:

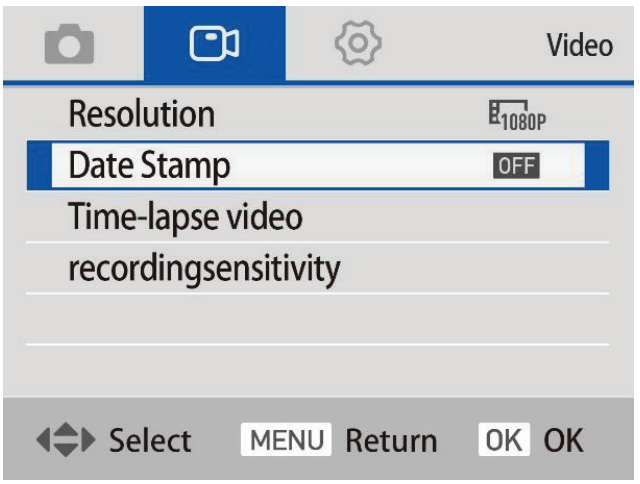

Sub-Menu	Menu Content
Resolution	4K (2880*2160), 2K (2560*1440), 1080P (1920*1080/60fps), 1080P (1920*1080/30fps), 720P
Date Stamp	Turn On/Turn Off
Time-lapse video	Off, 1 second, 3 seconds, 5 seconds
recordingsensitivity	Soft, Normal, Strong

Available System Settings (cont.)

System Settings:

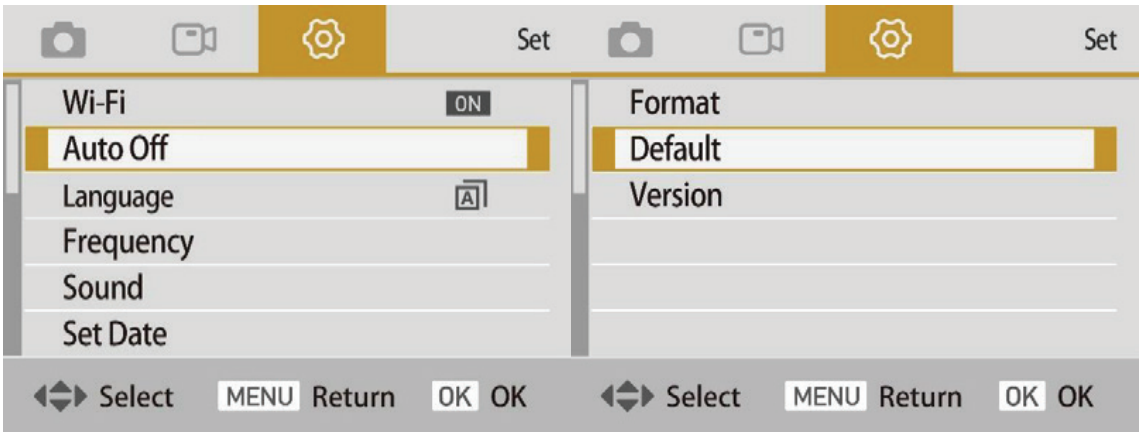

Sub-Menu	Menu Content
Wi-Fi	Turn On/Turn Off (Wifi name is VIVITAR_c88ad8bf4311, default password is 12345678)
Auto Off	Off, 3 minutes, 5 minutes, 10 minutes
Language	Provides 13 language options to choose from*.
Frequency	50 Hz, 60 Hz
Sound	Power-on sound, Shutter sound, Operating volume
Set Date	Year, Month, Date, Hour, Minute, Second
Format	Cancel or Ok
Default	Cancel or Ok
Version	VIVITAR-202404

*English/German/French/Spanish/Italian/Turkiye/Russian/Portuguese/Dutch/Simplified Chinese/Traditional Chinese/Japanese/Polish

Insert and Format the Memory Card

A class 10 or higher speed memory card is recommended for normal use.

Insert the memory card into the memory card slot until you hear a “click”. Pay attention to the edges and corners.

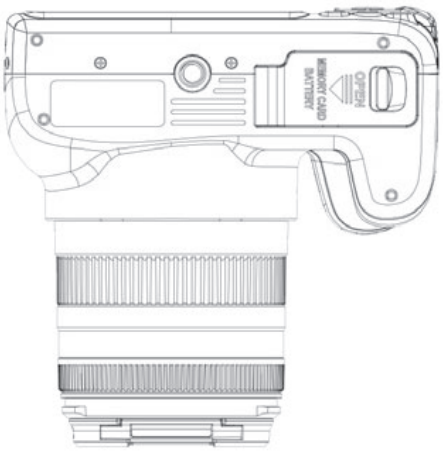

To remove the memory card: push the memory card in and it will automatically pop out.

Format the Memory Card

It is recommended to format the memory card before the first use.
To format the memory card, press the menu button to open the menu system.
Then press the Left or Right buttons repeatedly to switch to system settings. Press Up or Down to find “Format” and press OK to get the sub-menu. Select Format to format the memory card.

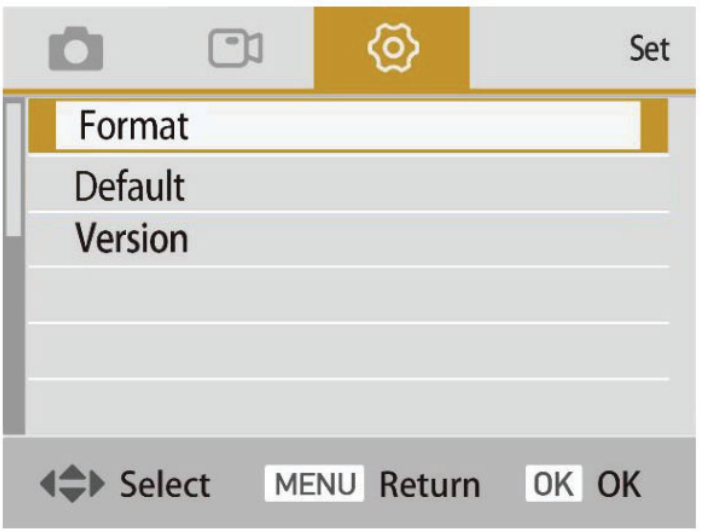

Note: if the memory card is not native format, the screen will pop-up a prompt: “Unsupported file system, do you want to format?” Please format the memory card as described above.

WARNING:
Formatting the memory card will erase all the data stored on it and the data will be irrecoverable. Save your important data to a PC before formatting.

Using the Camera

Taking a Photo

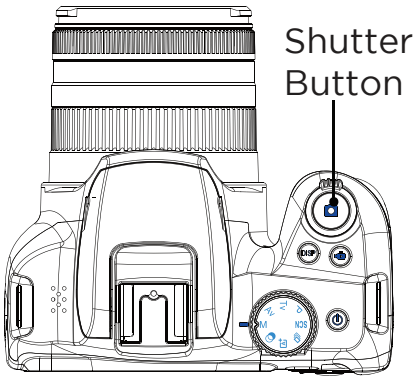

Lightly press the Shutter button to take a quick shot. Full press to take a photograph.

When taking a photo you can use the mode dial to change the current mode.

Rotate the mode dial to select the desired mode.

Icon	Mode	Description
M	Manual Exposure	Change camera to manual mode.
Av	Aperture Priority	Manually set the aperture. The camera will automatically select a fitting aperture.
Tv	Shutter Priority	Manually set the shutter speed. The camera will automatically select a fitting shutter speed.
P	Program Auto Exposure	The camera will automatically set both the shutter speed and aperture.
SCN	Scene Mode	Load a preset scene from the camera.
	Continuous Shooting Mode	The camera will continue shooting photos automatically while holding down the camera's shutter button.
	Intelligent Scene Mode	The camera selects the optimum settings automatically for the current scene.
	Filter Mode	Add or change current filters.

Using the Camera (cont.)

Taking a Video

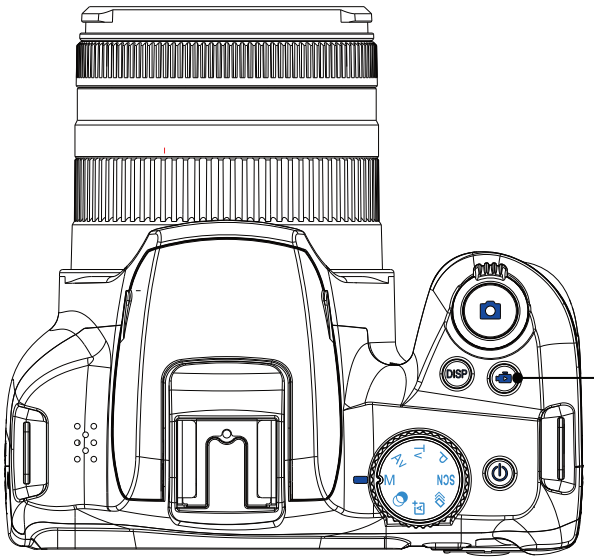

Press the Record button to start and stop recording.

Playback Mode

Press the Playback button to enter playback mode. Press again to leave playback mode.

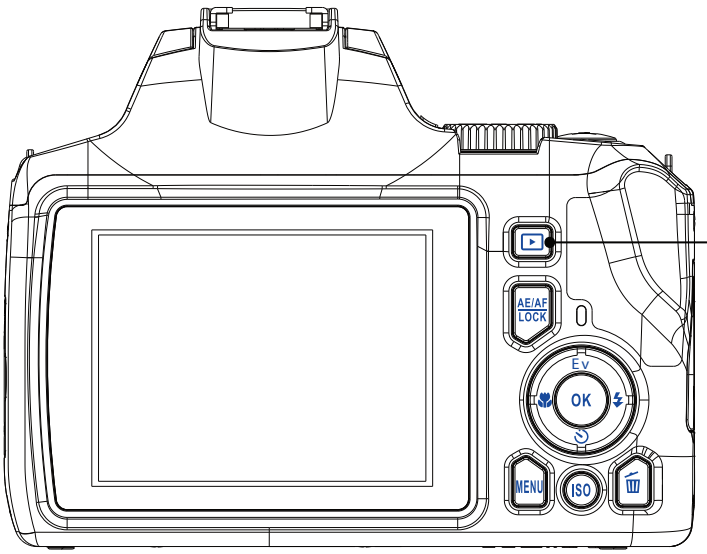

In playback mode use the Left and Right buttons to view photos and videos.

Using the Camera (cont.)

Pressing the Menu button in playback mode will display the playback menu options.

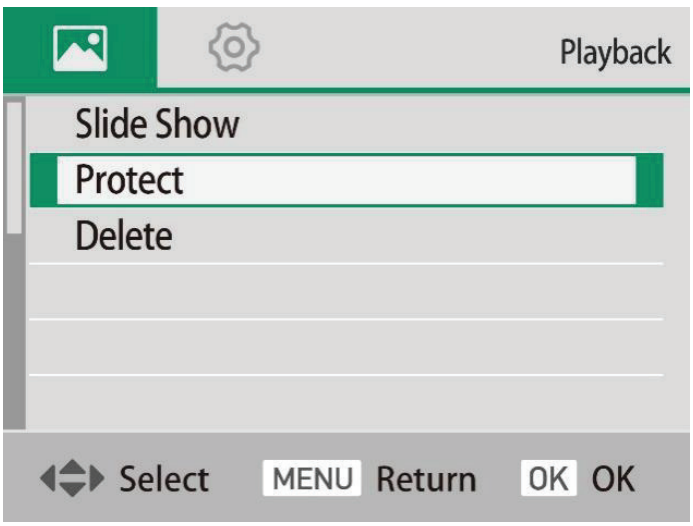

Slide Show: Select to create a slideshow from the photos saved on the camera. Set interval duration between slides and enable or disable looping.

Protect: Use to lock photos. Locked photos cannot be deleted on the camera until they are unlocked. There are four options: Lock Current, Unlock Current, Lock All, and Unlock All.

Delete: Use to delete photos and videos. There are two options: Delete Current Photo and Delete All Files.

Playback in HDTV

The high-definition interface of this camera can only be connected to a high definition TV, not to a computer.

Insert the public port of an HD cable (not included) into the HD interface of the camera, and connect the other end of the port to the HD Input Interface of the HD TV.

Note: Stop recording/playing videos before connecting/unplugging the HD cable. (The TV signal source needs to be adjusted to high-definition mode)

After connecting the HDTV, the camera display content will automatically switch to the HDTV, and the camera screen will be automatically blacked out.

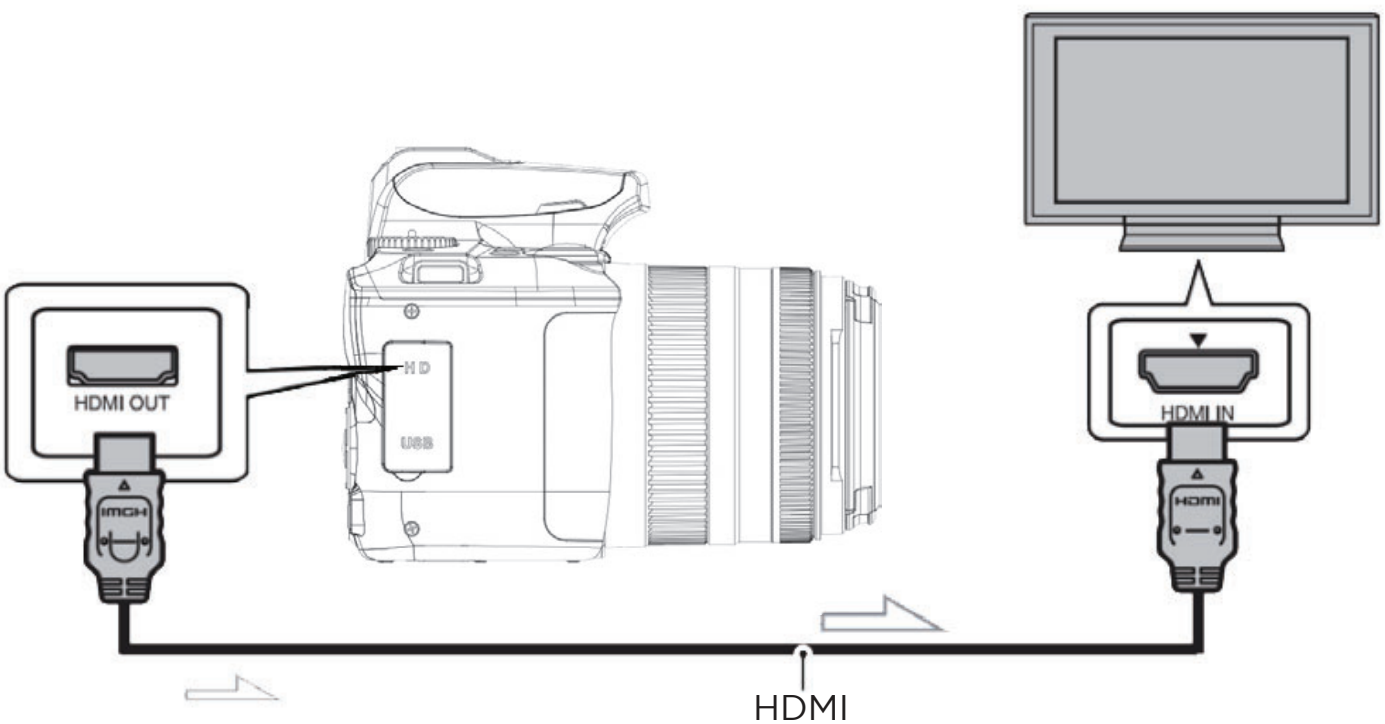

Connect to a Computer

1. Connect one end of the included USB-C cable into the USB port on your camera.

2. Connect the other end of the included USB-C cable into an available USB port on your computer.

3. The camera will automatically turn ON if OFF when connected. The screen will display two options. Press the Up/Down button to select the desired option, then press OK to confirm the selection.

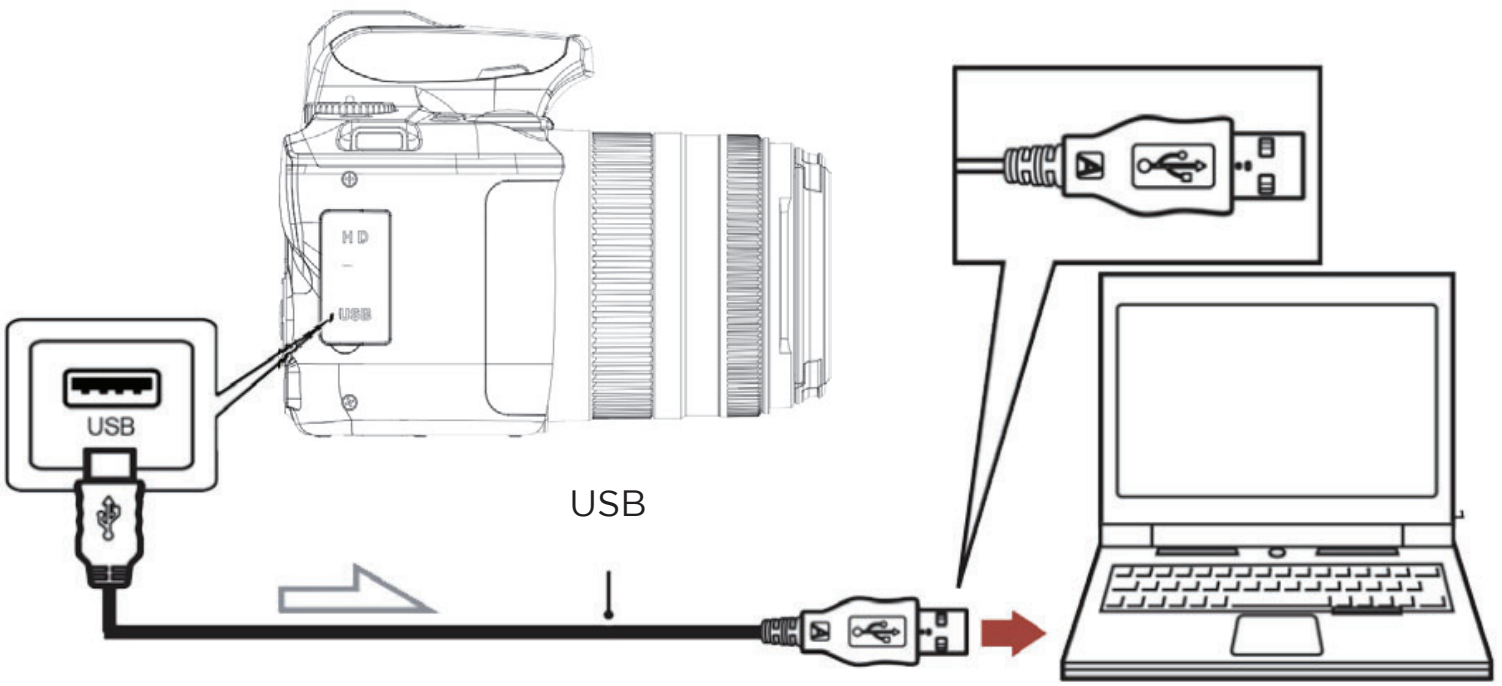

Charging Mode
Sets the camera to charging mode. If the camera is powered off while charging it will charge faster.

Mass Storage Mode
Displays the camera's memory card drive onto the computer. Transfer files from the camera to the computer.

Connecting to the App

1. Download the VD Cam App. Scan the below QR code or search for "VD Cam(Video Dimension Camera)" on the App Store. For Android search for "VD Cam" on Google Play.

2. Follow the "Help" menu on the app before use for the best user experience.

Troubleshooting

If you encounter problems with the camera, please refer to this section.

1. The camera cannot be turned on after installing the battery:

(1) The battery power is insufficient, please replace the battery with a new one or charge the battery.
(2) The battery is installed in reverse, please confirm that the battery is installed in the correct way.
(3) The battery insulating paper is not removed.

2. The battery is not charging:

(1) If the red light of the charging indicator flashes, the battery is not in place or the contact is poor. Please re-install the battery until the indicator light is on (the indicator light goes out when the battery is fully charged)
(2) The charging indicator light is off and the charger is not plugged in properly. Please check whether the charger is connected normally.
(3) The ambient temperature is lower than 10°C, which may lead to slow charging or failure to charge.

3. Camera crashes:

Quickly pressing each button of the camera may cause the camera to freeze. After it crashes, unplug the battery and reboot.
Tip: When the camera is recording or taking pictures, do not quickly press the camera button. Under normal circumstances, the camera will display a waiting icon.

4. The memory card cannot be recognized:

(1) Please check whether the memory card complies with TF card (class10), the maximum is not more than 256G.
(2) Please check whether the memory card is inserted backwards.
(3) When the memory card is used on the camera for the first time, it is recommended to format it first.

Additional Notes

(1)Do not insert any object into the slot memory card slot except the memory card.
(2)After the power is turned on, the camera may show an unstable image for a few seconds, but this is not a fault.
(3)Due to the optical properties of the lens, there may be color dispersion (magnification of chromatic aberration) at the edges of the image. This is not a camera fault.
(4)It is normal for the memory card to get hot after a long period of use.
(5)It is normal for the camera's screen to heat up after a long period of use.

FCC Compliance Statement

Changes or modifications not expressly approved by the party responsible for compliance could void the user's authority to operate the equipment.

This device complies with Part 15 of the FCC Rules. Operation is subject to the following two conditions: (1) this device may not cause harmful interference, and (2) this device must accept any interference received, including interference that may cause undesired operation.

This equipment has been tested and found to comply with the limits for a Class B digital device, pursuant to Part 15 of the FCC Rules. These limits are designed to provide reasonable protection against harmful interference in a residential installation. This equipment generates, uses and can radiate radio frequency energy and, if not installed and used in accordance with the instructions, may cause harmful interference to radio communications. However, there is no guarantee that interference will not occur in a particular installation.

If this equipment does cause harmful interference to radio or television reception, which can be determined by turning the equipment off and on, the user is encouraged to try to correct the interference by one or more of the following measures:

-- Reorient or relocate the receiving antenna.
-- Increase the separation between the equipment and receiver.
-- Connect the equipment into an outlet on a circuit different from that to which the receiver is connected.
-- Consult the dealer or an experienced radio/TV technician for help.
This equipment complies with FCC radiation exposure limits set forth for an uncontrolled environment. This equipment should be installed and operated with minimum distance 20cm between the radiator and your body

VIVITAR WARRANTY

This warranty covers the original consumer purchaser only and is not transferable.
This warranty covers products that fail to function properly UNDER NORMAL USAGE, due to defects in material or workmanship. Yourproduct will be repaired or replaced at no charge for parts or labor for a period of one year.
What Is Not Covered by Warranty:
Damages or malfunctions not resulting from defects in material or workmanship and damages or malfunctions from other than normal use, including but limited to, repair by unauthorized parties, tampering, modification or accident.
To Obtain Warranty Service and Troubleshooting Information:
Call 1-800-592-9541 or Visit our website at www.vivitar.com.
To receive Warranty service along with the name and address of an authorized product service center, the original consumer purchaser must contact us for problem determination and service procedures.
Proof of purchase in the form of a bill of sale or receipted invoice, evidencing that the Product is within the applicable Warranty period(s), MUST be presented in order to obtain the requested service.
It is your responsibility to properly package and send any defective products along with a dated copy of proof of purchase, a written explanation of the problem, and a valid return address to the authorized service center at your expense. Do not include any other items or accessories with the defective product. Any products received by the authorized service center that are not covered by warranty will be returned unrepaired.
NO WARRANTIES, WHETHER EXPRESS OR IMPLIED, INCLUDING, BUT NOT LIMITED TO, ANY IMPLIED WARRANTIES OF MERCHANTABILITY OR FITNESS FOR A PARTICULAR PURPOSE, OTHER THAN THOSE EXPRESSLY DESCRIBED ABOVE SHALL APPLY.
DISTRIBUTOR FURTHER DISCLAIMS ALL WARRANTIES AFTER THE EXPRESS WARRANTY PERIOD STATED ABOVE.
NO OTHER EXPRESS WARRANTY OR GUARANTY GIVEN BY ANY PERSON, FIRM OR ENTITY WITH RESPECT TO THE PRODUCT SHALL BE BINDING ON DISTRIBUTOR.
REPAIR, REPLACEMENT, OR REFUND OF THE ORIGINAL PURCHASE PRICE - AT DISTRIBUTOR'S SOLE DISCRETION -ARE THE EXCLUSIVE REMEDIES OF THE CONSUMER.
IN NO EVENT WILL DISTRIBUTOR, ITS MANUFACTURERS, OR SAKAR INT. BE LIABLE FOR ANY INCIDENTAL, DIRECT, INDIRECT, SPECIAL, PUNITIVE OR CONSEQUENTIAL DAMAGES (SUCH AS, BUT NOT LIMITED TO, DAMAGES FOR LOSS OF PROFITS, BUSINESS, SAVINGS, DATA OR RECORDS) CAUSED BY THE USE, MISUSE OR INABILITY TO USE THE PRODUCT.
EXCEPT AS STATED HEREIN, NO OTHER WARRANTIES SHALL APPLY.
NOTWITHSTANDING THE FOREGOING, CONSUMER'S RECOVERY AGAINST DISTRIBUTOR SHALL NOT EXCEED THE PURCHASE PRICE OF THE PRODUCT SOLD BY DISTRIBUTOR.
THIS WARRANTY SHALL NOT EXTEND TO ANYONE OTHER THAN THE ORIGINAL CONSUMER WHO PURCHASED THE PRODUCT AND IS NOT TRANSFERABLE.
Some countries, states or provinces do not allow the exclusion or limitation of incidental or consequential damages or allow limitations on warranties, so limitation or exclusions may not apply to you. This warranty gives you specific legal rights, and you may have other rights that vary from state to state or province to province. Contact your authorized retailer to determine if another warranty applies. This product is manufactured, distributed and sold by SAKAR International, Inc. All other trademarks are the property of the respective owner, who has not sponsored, endorsed or approved this product.

Technical Support

For technical support issues please visit our website at www.vivitar.com.
You can find manuals, software and FAQ's on the website.
Can't find what you are looking for?
E-mail us at support@vivitar.com and one of our technical support team members will answer your questions.
For phone support in the US please call 1-800-592-9541.

VIVITAR

© 2024 Sakar International
195 Carter Drive
Edison, NJ 08817
Support: 800 592 9541
www.vivitar.com