Test Laboratory: UnionTrust Date: 2019/5/9

System Check_H2450

DUT: Dipole 2450 MHz

Communication System: CW; Frequency: 2450 MHz;Duty Cycle: 1:1
Medium: H2450 Medium parameters used: f = 2450 MHz; σ = 1.79 mho/m; ε_r = 40.1; ρ = 1000 kg/m^3

DASY4 Configuration:
- Probe: ES3DV3 - SN3090; ConvF(4.57, 4.57, 4.57); Calibrated: 2019/4/12
- Sensor-Surface: 3mm (Mechanical Surface Detection)
- Electronics: DAE4 Sn662; Calibrated: 2019/4/11
- Phantom: SAM 1; Type: QD 000 P40 CB; Serial: TP/1378
- ; Postprocessing SW: SEMCAD, V1.8 Build 186

system check/Area Scan (51x71x1): Measurement grid: dx=12mm, dy=12mm
Maximum value of SAR (interpolated) = 7.58 mW/g

system check/Zoom Scan (5x5x7)/Cube 0: Measurement grid: dx=8mm, dy=8mm, dz=5mm
Reference Value = 50.2 V/m; Power Drift = 0.129 dB
Peak SAR (extrapolated) = 10.9 W/kg
SAR(1 g) = 5.09 mW/g; SAR(10 g) = 2.32 mW/g
Maximum value of SAR (measured) = 6.70 mW/g

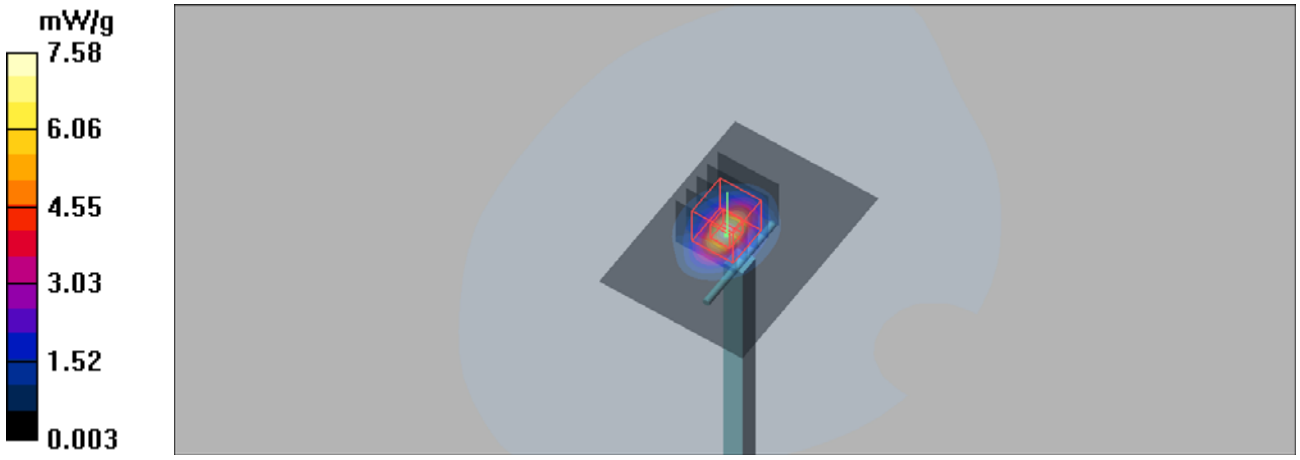

Test Laboratory: UnionTrust Date: 2019/5/9

System Check_B2450

DUT: Dipole 2450 MHz

Communication System: CW; Frequency: 2450 MHz;Duty Cycle: 1:1
Medium: MSL2450 Medium parameters used: f = 2450 MHz; σ = 2.02 mho/m; ε_r = 52.9; ρ = 1000 kg/m^3

DASY4 Configuration:
- Probe: ES3DV3 - SN3090; ConvF(4.47, 4.47, 4.47); Calibrated: 2019/4/12
- Sensor-Surface: 3mm (Mechanical Surface Detection)
- Electronics: DAE4 Sn662; Calibrated: 2019/4/11
- Phantom: SAM 2; Type: QD 000 P40 CB; Serial: TP-1376
- ; Postprocessing SW: SEMCAD, V1.8 Build 186

system check/Area Scan (51x71x1): Measurement grid: dx=12mm, dy=12mm
Maximum value of SAR (interpolated) = 8.14 mW/g

system check/Zoom Scan (5x5x7)/Cube 0: Measurement grid: dx=8mm, dy=8mm, dz=5mm
Reference Value = 60.4 V/m; Power Drift = -0.060 dB
Peak SAR (extrapolated) = 11.0 W/kg
SAR(1 g) = 5.37 mW/g; SAR(10 g) = 2.48 mW/g
Maximum value of SAR (measured) = 6.97 mW/g

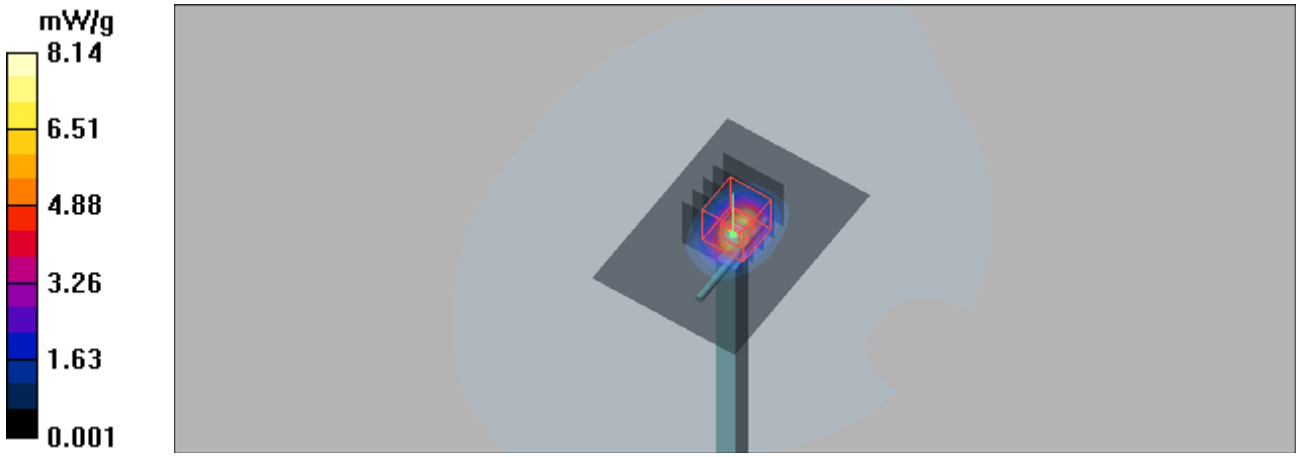

Test Laboratory: UnionTrust Date: 4/10/2019

System Check-D5GHz_H5300

DUT: Dipole D5GHzV2 SN:1280

Communication System: CW; Frequency: 5300 MHz;Duty Cycle: 1:1
Medium: H5G Medium parameters used: f = 5300 MHz; σ = 4.744 S/m; ε_r = 35.334; ρ = 1000 kg/m^3

DASY4 Configuration:
- Probe: EX3DV4 - SN7506; ConvF(5.46, 5.46, 5.46); Calibrated: 6/22/2018
- Sensor-Surface: 1.4mm (Mechanical Surface Detection)
- Electronics: DAE4 Sn1557; Calibrated: 6/5/2018
- Phantom: SAM 2; Type: QD 000 P40 CB; Serial: TP-1376
- ; Postprocessing SW: SEMCAD, V1.8 Build 186

Pin=100mW/Area Scan (91x91x1): Interpolated grid: dx=1.000 mm, dy=1.000 mm
Maximum value of SAR (interpolated) = 19.8 W/kg

Pin=100mW/Zoom Scan (8x8x7)/Cube 0: Measurement grid: dx=4mm, dy=4mm, dz=1.4mm
Reference Value = 74.72 V/m; Power Drift = -0.02 dB
Peak SAR (extrapolated) = 34.6 W/kg
SAR(1 g) = 8.08 W/kg; SAR(10 g) = 2.31 W/kg
Maximum value of SAR (measured) = 19.1 W/kg

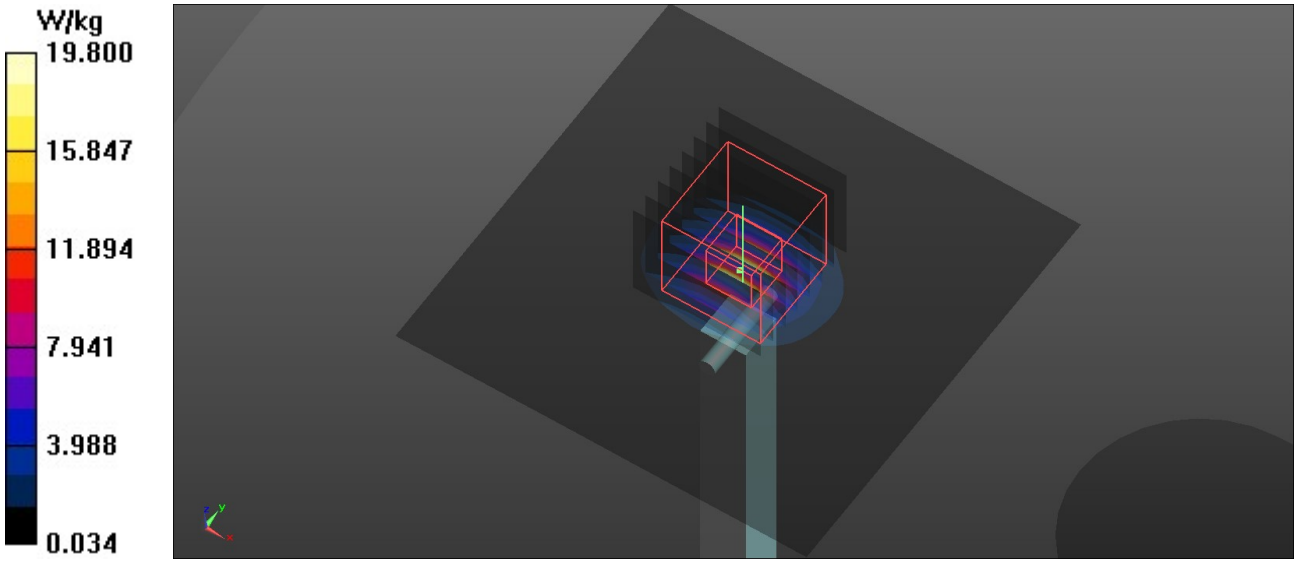

Test Laboratory: UnionTrust Date: 4/10/2019

System Check-D5GHz_H5600

DUT: Dipole D5GHzV2 SN:1280

Communication System: CW; Frequency: 5600 MHz;Duty Cycle: 1:1
Medium: H5G Medium parameters used: f = 5600 MHz; σ = 5.044 S/m; ε_r = 34.91; ρ = 1000 kg/m^3

DASY4 Configuration:
- Probe: EX3DV4 - SN7506; ConvF(4.96, 4.96, 4.96); Calibrated: 6/22/2018
- Sensor-Surface: 1.4mm (Mechanical Surface Detection)
- Electronics: DAE4 Sn1557; Calibrated: 6/5/2018
- Phantom: SAM 2; Type: QD 000 P40 CB; Serial: TP-1376
- ; Postprocessing SW: SEMCAD, V1.8 Build 186

Pin=100mWz/Area Scan (91x91x1): Interpolated grid: dx=1.000 mm, dy=1.000 mm
Maximum value of SAR (interpolated) = 20.2 W/kg

Pin=100mW/Zoom Scan (8x8x7)/Cube 0: Measurement grid: dx=4mm, dy=4mm, dz=1.4mm
Reference Value = 72.22 V/m; Power Drift = 0.05 dB
Peak SAR (extrapolated) = 36.8 W/kg
SAR(1 g) = 8.28 W/kg; SAR(10 g) = 2.35 W/kg
Maximum value of SAR (measured) = 19.9 W/kg

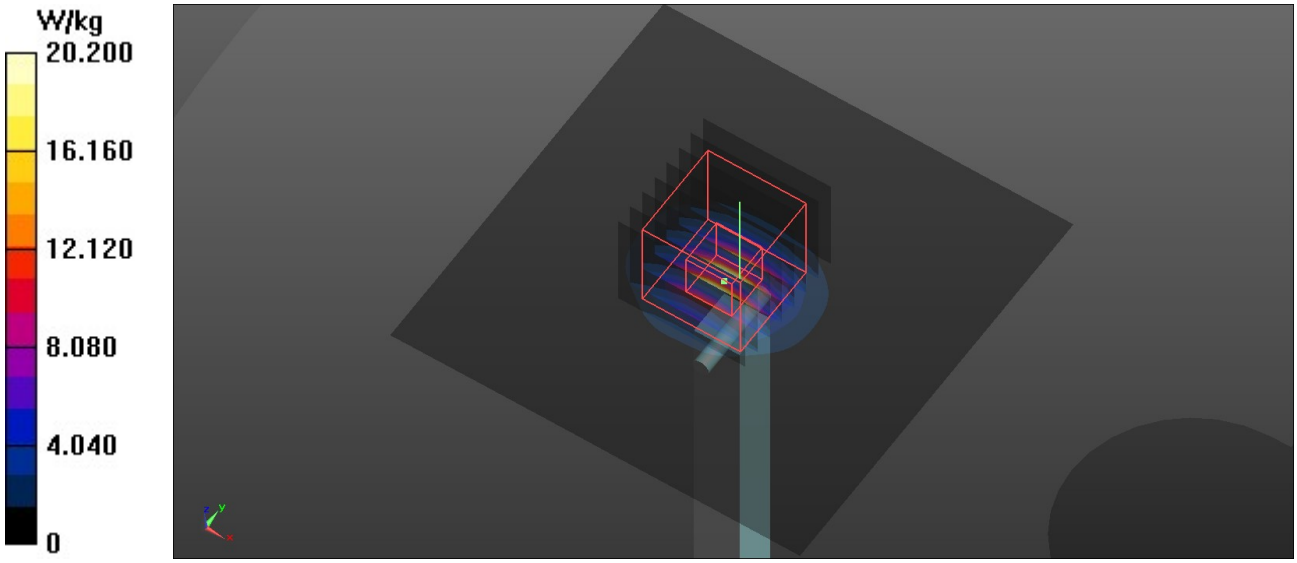

Test Laboratory: UnionTrust Date: 4/10/2019

System Check-D5GHz_H5800

DUT: Dipole D5GHzV2 SN:1280

Communication System: CW; Frequency: 5800 MHz;Duty Cycle: 1:1
Medium: H5G Medium parameters used: f = 5800 MHz; σ = 5.253 S/m; ε_r = 34.621; ρ = 1000 kg/m^3

DASY4 Configuration:
- Probe: EX3DV4 - SN7506; ConvF(5.1, 5.1, 5.1); Calibrated: 6/22/2018
- Sensor-Surface: 1.4mm (Mechanical Surface Detection)
- Electronics: DAE4 Sn1557; Calibrated: 6/5/2018
- Phantom: SAM 2; Type: QD 000 P40 CB; Serial: TP-1376
- ; Postprocessing SW: SEMCAD, V1.8 Build 186

Pin=100mW/Area Scan (91x91x1): Interpolated grid: dx=1.000 mm, dy=1.000 mm
Maximum value of SAR (interpolated) = 19.3 W/kg

Pin=100mW/Zoom Scan (8x8x7)/Cube 0: Measurement grid: dx=4mm, dy=4mm, dz=1.4mm
Reference Value = 69.32 V/m; Power Drift = 0.01 dB
Peak SAR (extrapolated) = 37.6 W/kg
SAR(1 g) = 7.92 W/kg; SAR(10 g) = 2.24 W/kg
Maximum value of SAR (measured) = 19.6 W/kg

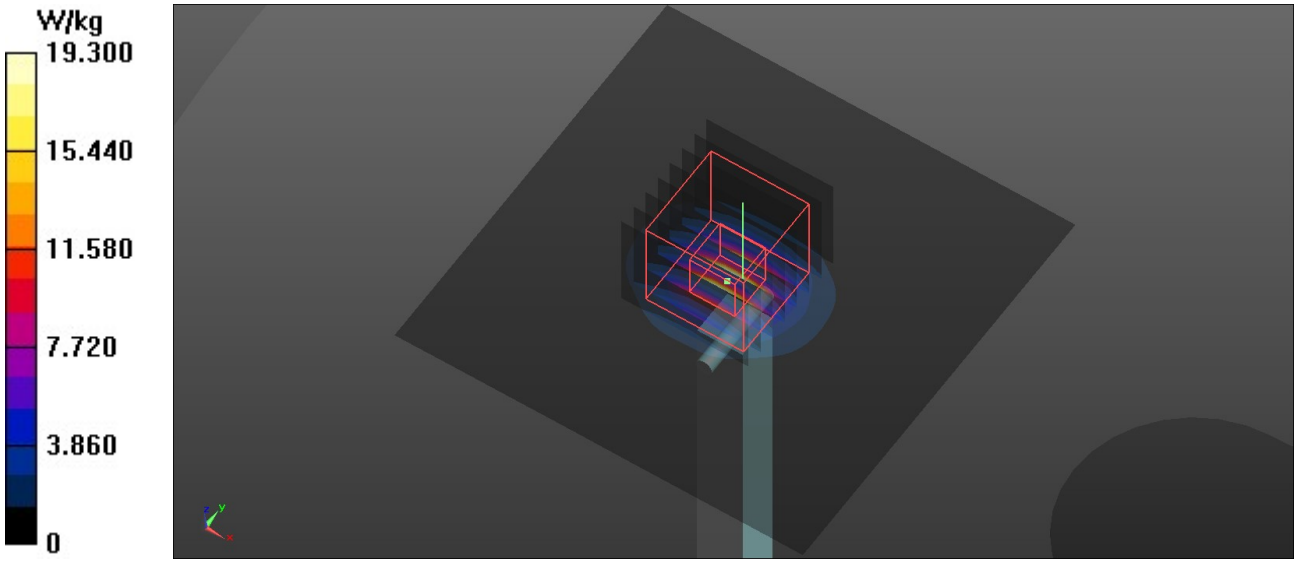

Test Laboratory: UnionTrust Date: 4/11/2019

System Check-D5GHz_B5300

DUT: Dipole D5GHzV2 SN:1280

Communication System: CW; Frequency: 5300 MHz;Duty Cycle: 1:1
Medium: B5G Medium parameters used: f = 5300 MHz; σ = 5.374 S/m; ε_r = 49.216; ρ = 1000 kg/m^3

DASY4 Configuration:
- Probe: EX3DV4 - SN7506; ConvF(4.91, 4.91, 4.91); Calibrated: 6/22/2018
- Sensor-Surface: 1.4mm (Mechanical Surface Detection)
- Electronics: DAE4 Sn1557; Calibrated: 6/5/2018
- Phantom: SAM 2; Type: QD 000 P40 CB; Serial: TP-1376
- ; Postprocessing SW: SEMCAD, V1.8 Build 186

Pin=100mW/Area Scan (91x91x1): Interpolated grid: dx=1.000 mm, dy=1.000 mm
Maximum value of SAR (interpolated) = 22.3 W/kg

Pin=100mW/Zoom Scan (8x8x7)/Cube 0: Measurement grid: dx=4mm, dy=4mm, dz=1.4mm
Reference Value = 68.32 V/m; Power Drift = 0.03 dB
Peak SAR (extrapolated) = 34.5 W/kg
SAR(1 g) = 7.38 W/kg; SAR(10 g) = 2.13 W/kg
Maximum value of SAR (measured) = 21.6 W/kg

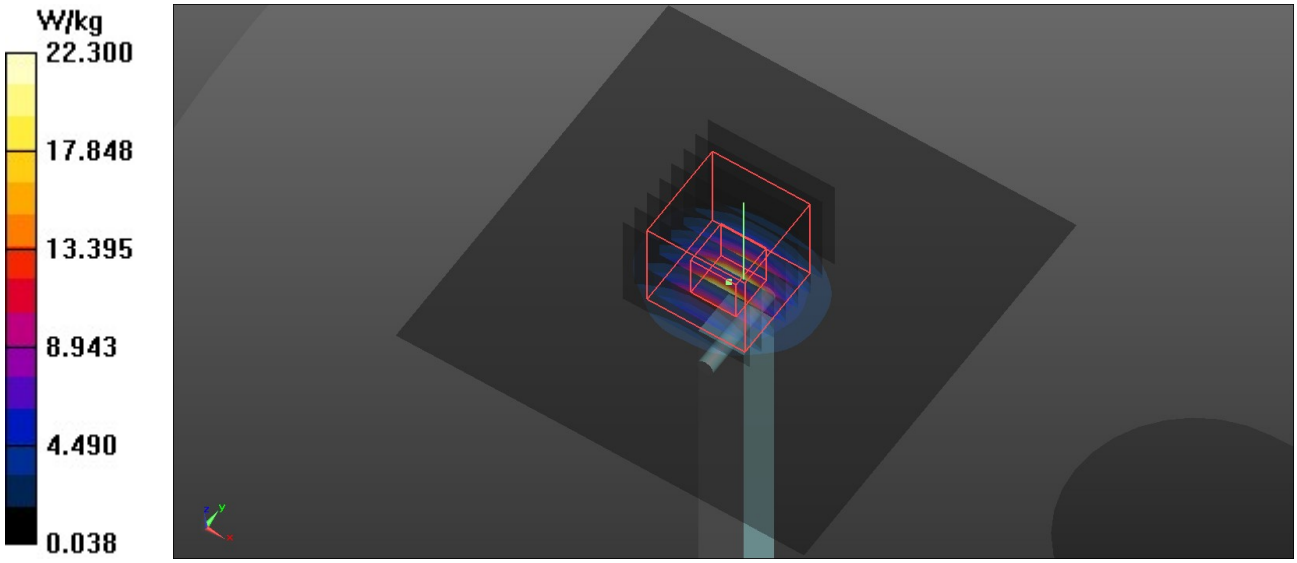

Test Laboratory: UnionTrust Date: 4/11/2019

System Check-D5GHz_B5600

DUT: Dipole D5GHzV2 SN:1280

Communication System: CW; Frequency: 5600 MHz;Duty Cycle: 1:1
Medium: B5G Medium parameters used: f = 5600 MHz; σ = 5.844 S/m; ε_r = 48.635; ρ = 1000 kg/m^3

DASY4 Configuration:
- Probe: EX3DV4 - SN7506; ConvF(4.25, 4.25, 4.25); Calibrated: 6/22/2018
- Sensor-Surface: 1.4mm (Mechanical Surface Detection)
- Electronics: DAE4 Sn1557; Calibrated: 6/5/2018
- Phantom: SAM 2; Type: QD 000 P40 CB; Serial: TP-1376
- ; Postprocessing SW: SEMCAD, V1.8 Build 186

Pin=100mW/Area Scan (91x91x1): Interpolated grid: dx=1.000 mm, dy=1.000 mm
Maximum value of SAR (interpolated) = 26.6 W/kg

Pin=100mW/Zoom Scan (8x8x7)/Cube 0: Measurement grid: dx=4mm, dy=4mm, dz=1.4mm
Reference Value = 71.60 V/m; Power Drift = -0.01 dB
Peak SAR (extrapolated) = 44.3 W/kg
SAR(1 g) = 8.01 W/kg; SAR(10 g) = 2.18 W/kg
Maximum value of SAR (measured) = 27.0 W/kg

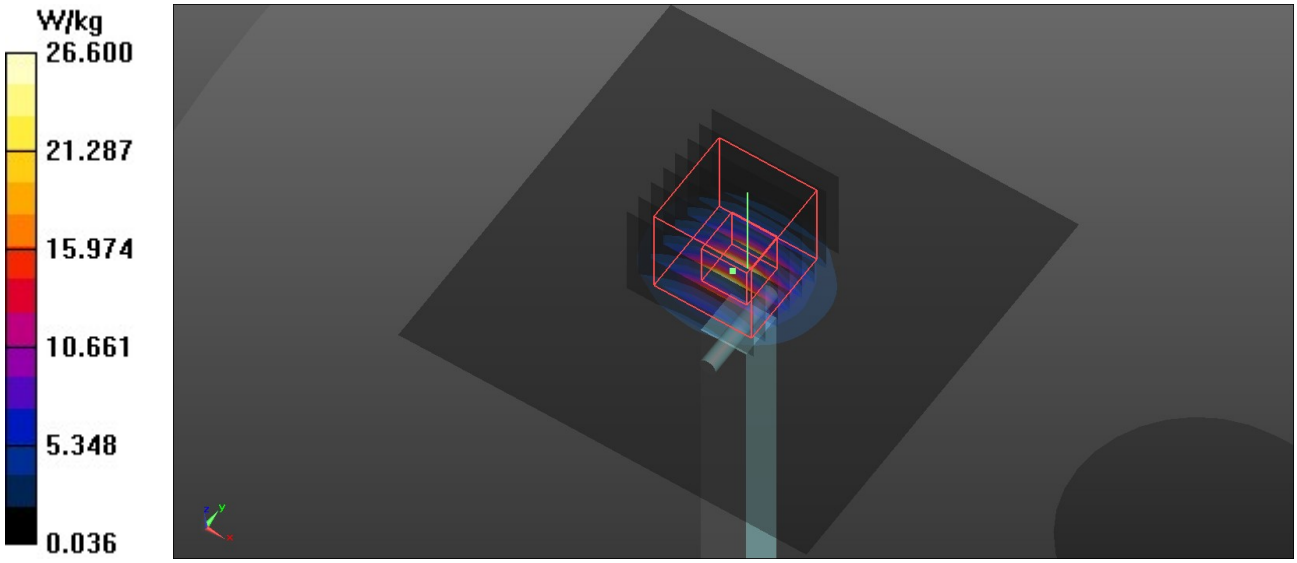

Test Laboratory: UnionTrust Date: 4/11/2019

System Check-D5GHz_B5800

DUT: Dipole D5GHzV2 SN:1280

Communication System: CW; Frequency: 5800 MHz;Duty Cycle: 1:1
Medium: B5G Medium parameters used: f = 5800 MHz; σ = 6.104 S/m; ε_r = 48.141; ρ = 1000 kg/m^3

DASY4 Configuration:
- Probe: EX3DV4 - SN7506; ConvF(4.31, 4.31, 4.31); Calibrated: 6/22/2018
- Sensor-Surface: 1.4mm (Mechanical Surface Detection)
- Electronics: DAE4 Sn1557; Calibrated: 6/5/2018
- Phantom: SAM 2; Type: QD 000 P40 CB; Serial: TP-1376
- ; Postprocessing SW: SEMCAD, V1.8 Build 186

Pin=100mW/Area Scan (91x91x1): Interpolated grid: dx=1.000 mm, dy=1.000 mm
Maximum value of SAR (interpolated) = 25.2 W/kg
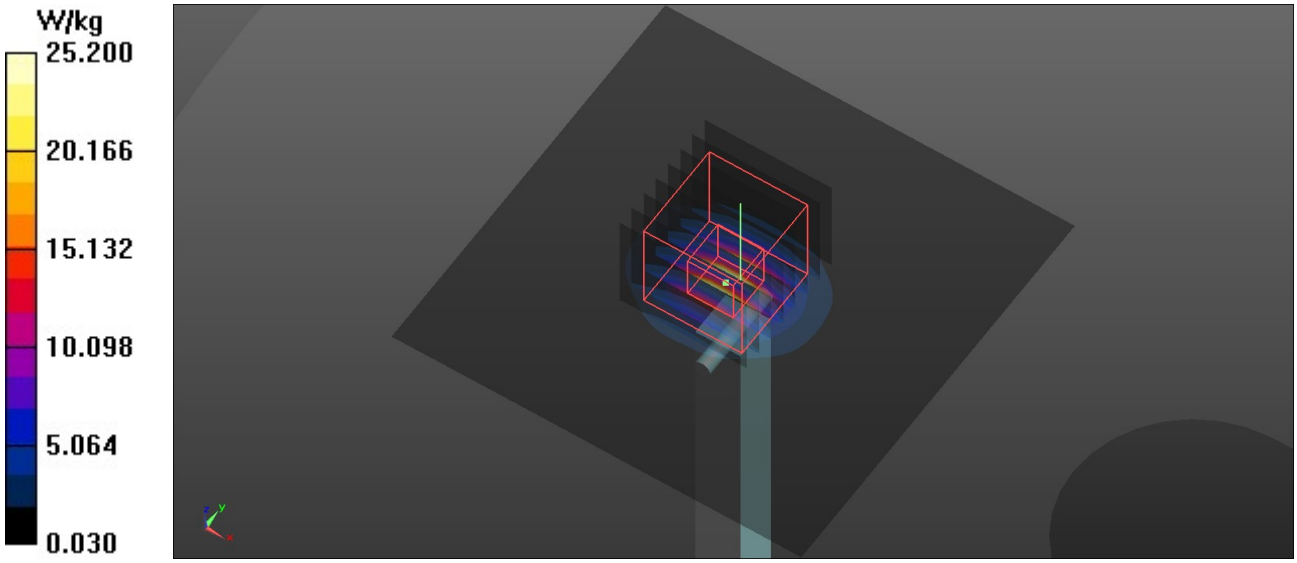
Pin=100mW/Zoom Scan (8x8x7)/Cube 0: Measurement grid: dx=4mm, dy=4mm, dz=1.4mm
Reference Value = 67.28 V/m; Power Drift = 0.08 dB
Peak SAR (extrapolated) = 42.9 W/kg
SAR(1 g) = 7.62 W/kg; SAR(10 g) = 2.14 W/kg
Maximum value of SAR (measured) = 24.6 W/kg