EMTEK
Access to the World

FCC 47 CFR PART 15 SUBPART C

CERTIFICATION TEST REPORT

For

Bluetooth Car Charger(Smart driving Edition)

MODEL No.: BFQ02RM

FCC ID: 2AIS7-2016Q2BFQ02RM

Trademark: ROIDMI

REPORT NO.: ES160415021E3

ISSUE DATE: May 10, 2016

Prepared for

Wuxi Roidmi Information Technology Co. Ltd.

Layer4, Building C8, NO.1699, Huishan Avenue, Huishan Economic Development District, Wuxi City, China

Prepared by

EMTEK (SHENZHEN) CO., LTD.

Bldg 69, Majialong Industry Zone, Nanshan District, Shenzhen, Guangdong, China
TEL: 86-755-26954280
FAX: 86-755-26954282

Table of Contents

1 TEST RESULT CERTIFICATION 3
2 EUT TECHNICAL DESCRIPTION 4
3 SUMMARY OF TEST RESULT 7
4 TEST METHODOLOGY 8
4.1 GENERAL DESCRIPTION OF APPLIED STANDARDS 8
4.2 MEASUREMENT EQUIPMENT USED 8
4.3 DESCRIPTION OF TEST MODES 9
5 FACILITIES AND ACCREDITATIONS 10
5.1 FACILITIES 10
5.2 LABORATORY ACCREDITATIONS AND LISTINGS 10
6 TEST SYSTEM UNCERTAINTY 11
7 SETUP OF EQUIPMENT UNDER TEST 12
7.1 RADIO FREQUENCY TEST SETUP 1 12
7.2 RADIO FREQUENCY TEST SETUP 2 12
7.3 CONDUCTED EMISSION TEST SETUP 14
7.4 BLOCK DIAGRAM CONFIGURATION OF TEST SYSTEM 15
7.5 SUPPORT EQUIPMENT 15
8 TEST REQUIREMENTS 16
8.1 OCCUPIED BANDWIDTH 16
8.2 RADIATED SPURIOUS EMISSION 21
8.3 CONDUCTED EMISSION TEST 30
8.4 ANTENNA APPLICATION 31

1 TEST RESULT CERTIFICATION

Applicant:	Wuxi Roidmi Information Technology Co. Ltd. Layer4, Building C8, NO.1699, Huishan Avenue, Huishan Economic Development District, Wuxi City, China
Manufacturer:	Inventec Application (Jiangning) Corporation 133, JiangJun Road, Jiangning Economic and Technological Development Zone, Nanjing 211153, P.R.China
Product Description:	Bluetooth Car Charger(Smart driving Edition)
Model Number:	BFQ02RM
File Number:	ES160415021E3
Date of Test:	April 15, 2016 to May 10, 2016

Measurement Procedure Used:

APPLICABLE STANDARDS	
STANDARD	**TEST RESULT**
FCC 47 CFR Part 2, Subpart J FCC 47 CFR Part 15, Subpart C	**PASS**

The above equipment was tested by EMTEK (SHENZHEN) CO., LTD. The test data, data evaluation, test procedures, and equipment configurations shown in this report were made in accordance with the procedures given in ANSI C63.10 (2013) and the energy emitted by the sample EUT tested as described in this report is in compliance with the requirements of FCC Rules Part 2 and Part 15.239.

The test results of this report relate only to the tested sample identified in this report

Date of Test : April 15, 2016 to May 10, 2016

Prepared by : Joe Xia /Editor

Reviewer : Jack Li /Supervisor

Approve & Authorized Signer : Lisa Wang/Manager

2 EUT TECHNICAL DESCRIPTION

Characteristics	Description
Device Type	Bluetooth 3.0 classic model
Data Rate	1Mbps for BT v2.0/v2.1/v3.0 BR FM Modulation 2Mbps for BT v2.0/v2.1/v3.0 EDR pi/4-DQPSK modulation 3Mbps for BT v2.0/v2.1/v3.0 EDR 8DPSK modulation
Modulation:	FM Modulation for BT v2.0/v2.1/v3.0 BR(1Mbps) pi/4-DQPSK modulation for BT v2.0/v2.1/v3.0 EDR(2Mbps) 8DPSK modulation for BT v2.0/v2.1/v3.0 EDR (3Mbps)
Operating Frequency Range(s):	2402-2480MHz for BT v2.0 BR /2.0+EDR; 2402-2480MHz for BT v2.1 BR /2.1+EDR; 2402-2480MHz for BT v3.0 BR /3.0+ EDR;
Number of Channels:	79 channels for BT v2.0/v2.1/v3.0 BR; 79 channels for BT v2.0/v2.1/v3.0 EDR;
Transmit Power Max:	3.854 dBm
Antenna Type	PCB Antenna
Antenna Gain	0dBi;
Power supply	☒DC supply: DC15V from adapter and DC12V from Li-on battery
	☒Adapter: Model: YJS020D-1501000C Input: 100-240V~50-60Hz 500mA Output: 15.0V-1000mA

Note: *for more details, please refer to the User's manual of the EUT.*

Characteristics	Description
Device Type	Bluetooth 4.0 BLE model
Data Rate	1Mbps;
Modulation	GFSK;
Operating Frequency Range	2402-2480MHz
Number of Channels	40 Channels
Transmit Power Max	5.097 dBm
Antenna Type	PCB Antenna
Antenna Gain	0dBi;
Power supply	☒DC supply: DC15V from adapter and DC12V from Li-on battery
	☒Adapter: Model: YJS020D-1501000C Input: 100-240V~50-60Hz 500mA Output: 15.0V-1000mA

Note: *for more details, please refer to the User's manual of the EUT.*

Characteristics	Description
Device Type	FM transmitter
Modulation:	FM
Operating Frequency Range(s):	88.1-107.9MHz
Number of Channels:	199 channels
Antenna Type	Monopole antenna
Power supply	☒DC supply: DC15V from adapter and DC12V from Li-on battery
	☒Adapter: Model: YJS020D-1501000C Input: 100-240V~50-60Hz 500mA Output: 15.0V-1000mA

Note: *for more details, please refer to the User's manual of the EUT.*

3 SUMMARY OF TEST RESULT

FCC Part Clause	Test Parameter	Verdict	Remark
15.215 (c)	Occupied Bandwidth	PASS	
15.239 (b)	Field strength of the fundamental signal	PASS	
15.239 (b) (c) 15.209	Spurious emissions	PASS	
15.207	Conducted Emission	N/A	
15.247(b)	Antenna Application	PASS	
NOTE1: N/A (Not Applicable)			

RELATED SUBMITTAL(S) / GRANT(S):

This submittal(s) (test report) is intended for FCC ID: 2AIS7-2016Q2BFQ02RM filing to comply with Section 15.239 of the FCC Part 15, Subpart C Rules.

4 TEST METHODOLOGY

4.1 GENERAL DESCRIPTION OF APPLIED STANDARDS

According to its specifications, the EUT must comply with the requirements of the following standards:
FCC 47 CFR Part 2, Subpart J
FCC 47 CFR Part 15, Subpart C

4.2 MEASUREMENT EQUIPMENT USED

4.2.1 Conducted Emission Test Equipment

EQUIPMENT TYPE	MFR	MODEL NUMBER	SERIAL NUMBER	LAST CAL.
Test Receiver	Rohde & Schwarz	ESCS30	828985/018	05/17/2015
L.I.S.N.	Schwarzbeck	NNLK8129	8129203	05/17/2015
50Ω Coaxial Switch	Anritsu	MP59B	M20531	N/A
Pulse Limiter	Rohde & Schwarz	ESH3-Z2	100006	05/17/2015
Voltage Probe	Rohde & Schwarz	TK9416	N/A	05/17/2015
I.S.N	Rohde & Schwarz	ENY22	1109.9508.02	05/17/2015

4.2.2 Radiated Emission Test Equipment

EQUIPMENT TYPE	MFR	MODEL NUMBER	SERIAL NUMBER	LAST CAL.
EMI Test Receiver	Rohde & Schwarz	ESU	1302.6005.26	05/17/2015
Pre-Amplifier	HP	8447D	2944A07999	05/17/2015
Bilog Antenna	Schwarzbeck	VULB9163	142	05/17/2015
Loop Antenna	ARA	PLA-1030/B	1029	05/17/2015
Horn Antenna	Schwarzbeck	BBHA 9170	BBHA9170399	05/17/2015
Horn Antenna	Schwarzbeck	BBHA 9120	D143	05/17/2015
Cable	Schwarzbeck	AK9513	ACRX1	05/17/2015
Cable	Rosenberger	N/A	FP2RX2	05/17/2015
Cable	Schwarzbeck	AK9513	CRPX1	05/17/2015
Cable	Schwarzbeck	AK9513	CRRX2	05/17/2015

4.2.3 Radio Frequency Test Equipment

EQUIPMENT TYPE	MFR	MODEL NUMBER	SERIAL NUMBER	LAST CAL.
Spectrum Analyzer	Agilent	E4407B	88156318	05/17/2015
Power meter	Anritsu	ML2495A	0824006	05/17/2015
Power sensor	Anritsu	MA2411B	0738172	05/17/2015
Spectrum Analyzer	Agilent	N9010A	My53470879	05/17/2015

Remark: *Each piece of equipment is scheduled for calibration once a year.*

4.3 DESCRIPTION OF TEST MODES

The EUT has been tested under its typical operating condition.
The EUT configuration for testing is installed on RF field strength measurement to meet the Commissions requirement and operating in a manner which intends to maximize its emission characteristics in a continuous normal application.

The Transmitter was operated in the normal operating mode. The TX frequency was fixed which was for the purpose of the measurements.

Test of channel included the lowest and middle and highest frequency to perform the test, then record on this report.

Pre-defined engineering program for regulatory testing used to control the EUT for staying in continuous transmitting and receiving mode is programmed.

Frequency and Channel list for FM:

Channel	Frequency (MHz)	Channel	Frequency (MHz)	Channel	Frequency (MHz)
0	88.1	89	97.0	…	…
1	88.2	90	97.1	196	107.7
2	88.3	91	97.2	197	107.8
…	…	…	…	198	107.9
Note: fc=88.1MHz+(k)×0.1MHz k=0 to 198					

Test Frequency and channel for FM:

Lowest Frequency		Middle Frequency		Highest Frequency	
Channel	Frequency (MHz)	Channel	Frequency (MHz)	Channel	Frequency (MHz)
0	88.1	90	97.1	198	107.9

5 FACILITIES AND ACCREDITATIONS

5.1 FACILITIES

All measurement facilities used to collect the measurement data are located at

Bldg 69, Majialong Industry Zone District, Nanshan District, Shenzhen, China
The sites are constructed in conformance with the requirements of ANSI C63.7, ANSI C63.10 and CISPR Publication 22.

5.2 LABORATORY ACCREDITATIONS AND LISTINGS

Site Description

EMC Lab.	:	Accredited by CNAS, 2013.10.29 The certificate is valid until 2016.10.28 The Laboratory has been assessed and proved to be in compliance with CNAS-CL01:2006 (identical to ISO/IEC 17025:2005) The Certificate Registration Number is L2291. Accredited by TUV Rheinland Shenzhen 2015.4 The Laboratory has been assessed according to the requirements ISO/IEC 17025. Accredited by FCC, April 17, 2013 The Certificate Registration Number is 709623. Accredited by FCC, July 24, 2013 The Certificate Registration Number is 406365. Accredited by Industry Canada, November 29, 2012 The Certificate Registration Number is 4480A.
Name of Firm	:	EMTEK (SHENZHEN) CO., LTD.
Site Location	:	Bldg 69, Majialong Industry Zone, Nanshan District, Shenzhen, Guangdong, China

6 TEST SYSTEM UNCERTAINTY

The following measurement uncertainty levels have been estimated for tests performed on the apparatus:

Parameter	Uncertainty
Radio Frequency	±1x10^-5
Conducted Emissions Test	±2.0dB
Radiated Emission Test	±2.0dB
Occupied Bandwidth Test	±1.0dB
All emission, radiated	±3dB
Temperature	±0.5℃
Humidity	±3%

Measurement Uncertainty for a level of Confidence of 95%

7 SETUP OF EQUIPMENT UNDER TEST

7.1 RADIO FREQUENCY TEST SETUP 1

The FM component's antenna ports(s) of the EUT are connected to the measurement instrument per an appropriate attenuator. The EUT is controlled by PC/software to emit the specified signals for the purpose of measurements.

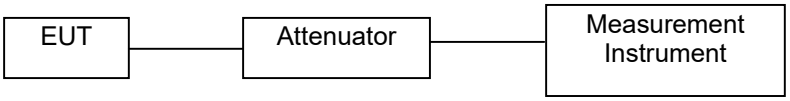

7.2 RADIO FREQUENCY TEST SETUP 2

The test site semi-anechoic chamber has met the requirement of NSA tolerance 4 dB according to the standards: ANSI C63.10. The test distance is 3m.The setup is according to the requirements in Section 13.1.4.1 of ANSI C63.10-2013 and CAN/CSA-CEI/IEC CISPR 22.

Below 30MHz：
The EUT is placed on a turntable 0.8 meters above the ground in the chamber, 3 meter away from the antenna (loop antenna). The Antenna should be positioned with its plane vertical at the specified distance from the EUT and rotated about its vertical axis for maximum response at each azimuth about the EUT. The center of the loop shall be 1 m above the ground. For certain applications, the loop antenna plane may also need to be positioned horizontally at the specified distance from the EUT.

Above 30MHz：
The EUT is placed on a turntable 0.8 meters above the ground in the chamber, 3 meter away from the antenna. The maximal emission value is acquired by adjusting the antenna height, polarisation and turntable azimuth. Normally, the height range of antenna is 1 m to 4 m, the azimuth range of turntable is 0° to 360°, and the receive antenna has two polarizations Vertical (V) and Horizontal (H).

Above 1GHz:
(Note: the FCC's permission to use 1.5m as an alternative per TCBC Conf call of Dec. 2, 2014.)
The EUT is placed on a turntable 1.5 meters above the ground in the chamber, 3 meter away from the antenna. The maximal emission value is acquired by adjusting the antenna height, polarisation and turntable azimuth. Normally, the height range of antenna is 1 m to 4 m, the azimuth range of turntable is 0° to 360°, and the receive antenna has two polarizations Vertical (V) and Horizontal (H).

(a) Radiated Emission Test Set-Up, Frequency Below 30MHz

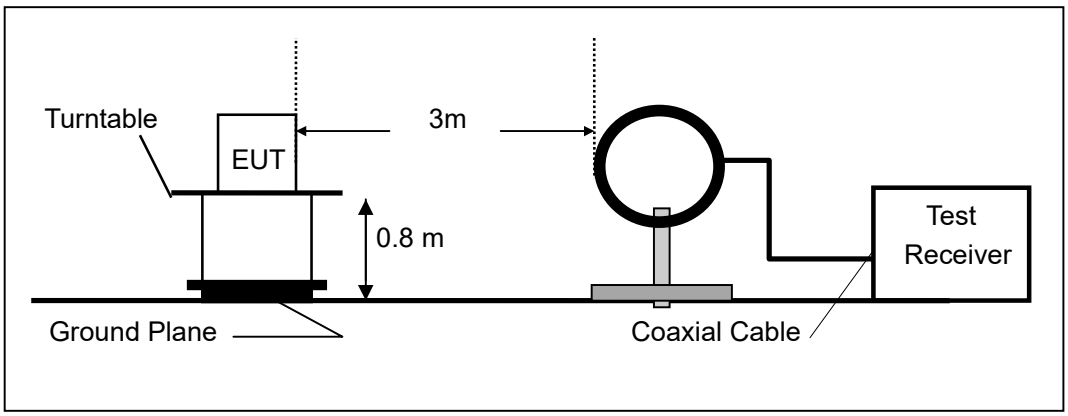

(b) Radiated Emission Test Set-Up, Frequency Below 1000MHz

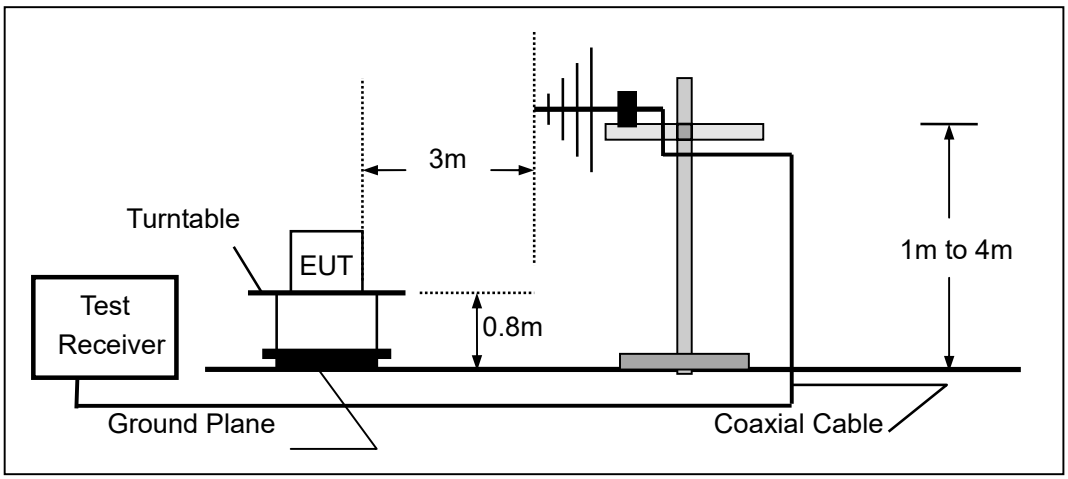

(c) Radiated Emission Test Set-Up, Frequency above 1000MHz

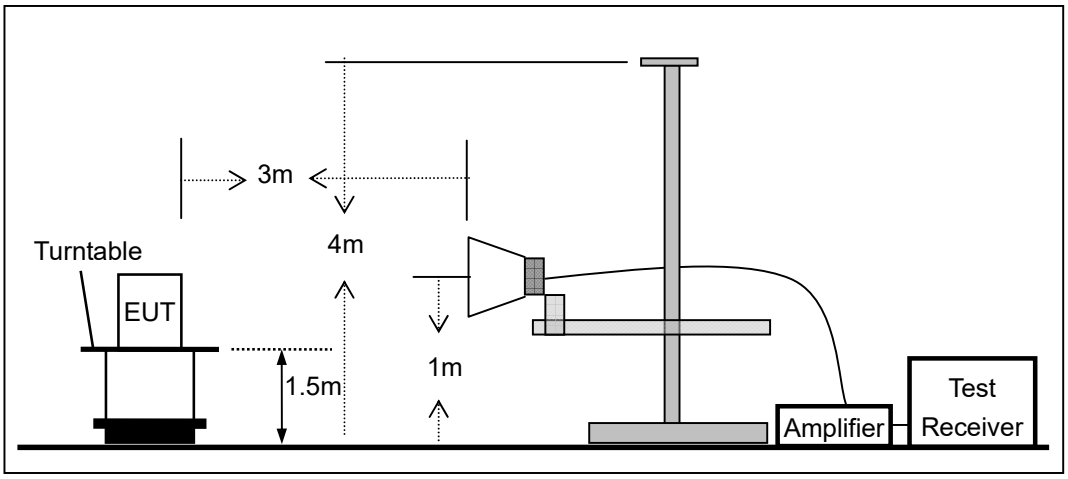

7.3 CONDUCTED EMISSION TEST SETUP

The mains cable of the EUT (Bluetooth Car Charger(Smart driving Edition)) must be connected to LISN. The LISN shall be placed 0.8 m from the boundary of EUT and bonded to a ground reference plane for LISN mounted on top of the ground reference plane. This distance is between the closest points of the LISN and the EUT. All other units of the EUT and associated equipment shall be at least 0.8m from the LISN.

Ground connections, where required for safety purposes, shall be connected to the reference ground point of the LISN and, where not otherwise provided or specified by the manufacturer, shall be of same length as the mains cable and run parallel to the mains connection at a separation distance of not more than 0.8 m.

According to the requirements in Section 13.1.4.1 of ANSI C63.10-2013 Conducted emissions from the EUT measured in the frequency range between 0.15 MHz and 30 MHz using CISPR Quasi-Peak and average detector mode.

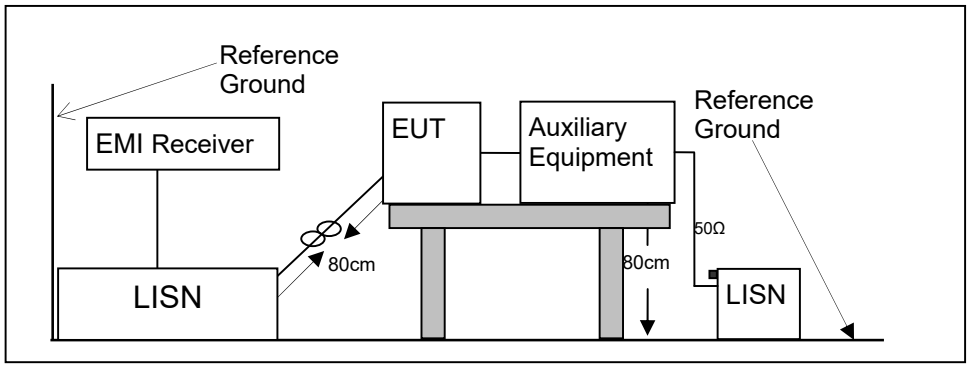

7.4 BLOCK DIAGRAM CONFIGURATION OF TEST SYSTEM

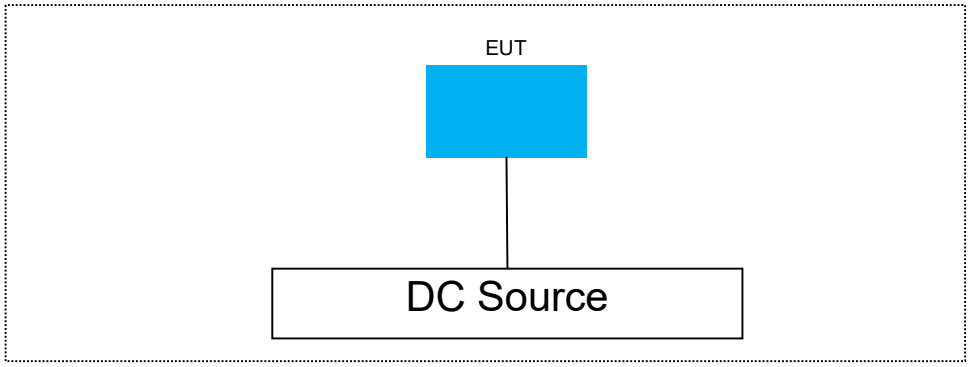

7.5 SUPPORT EQUIPMENT

Item	Equipment	Mfr/Brand	Model/Type No.	FCC ID	Note
N/A	N/A	N/A	N/A	N/A	N/A

Notes:

1. *All the equipment/cables were placed in the worst-case configuration to maximize the emission during the test.*
2. *Grounding was established in accordance with the manufacturer's requirements and conditions for the intended use.*

8 TEST REQUIREMENTS

8.1 OCCUPIED BANDWIDTH

8.1.1 Applicable Standard

According to FCC Part15 C Section 15.215(c)

8.1.2 Conformance Limit

200kHz

8.1.3 Test Configuration

Test according to clause 7.1 radio frequency test setup 1

8.1.4 Test Procedure

The RF output of EUT was connected to the spectrum analyzer by RF cable and attenuator. The path loss was compensated to the results for each measurement.
Set to the maximum power setting and enable the EUT transmit continuously
RBW≥ 1% of the 20 dB bandwidth
VBW≥RBW
Set Span= approximately 2 to 3 times the 20 dB bandwidth
Set Detector function = RMS
Set Trace mode = max hold.
Set Sweep = auto couple.
The EUT should be transmitting at its maximum data rate. Allow the trace to stabilize. Use the marker-to-peak function to set the marker to the peak of the emission. Use the marker-delta function to measure 20 dB down one side of the emission. Reset the markerdelta function, and move the marker to the other side of the emission, until it is (as close as possible to) even with the reference marker level. The marker-delta reading at this point is the 20 dB bandwidth of the emission.
If this value varies with different modes of operation (e.g., data rate, modulation format, etc.), repeat this test for each variation.
Measure and record the results in the test report.

Test Results

Temperature:	24℃	Test Date:	April 30, 2016
Humidity:	53 %	Test By:	King Kong

Modulation Mode	Channel Number	Channel Frequency (MHz)	Measurement Bandwidth (kHz)	Occupied Bandwidth (kHz)	Limit (kHz)	Verdict
FM	00	81.1	149.64	125.28	200	PASS
	90	97.1	149.52	124.20	200	PASS
	198	107.9	150.00	126.60	200	PASS
Note: N/A (Not Applicable)						

Test Model	20dB Bandwidth FM Transmitter Channel 0: 81.1MHz	FM Modulation

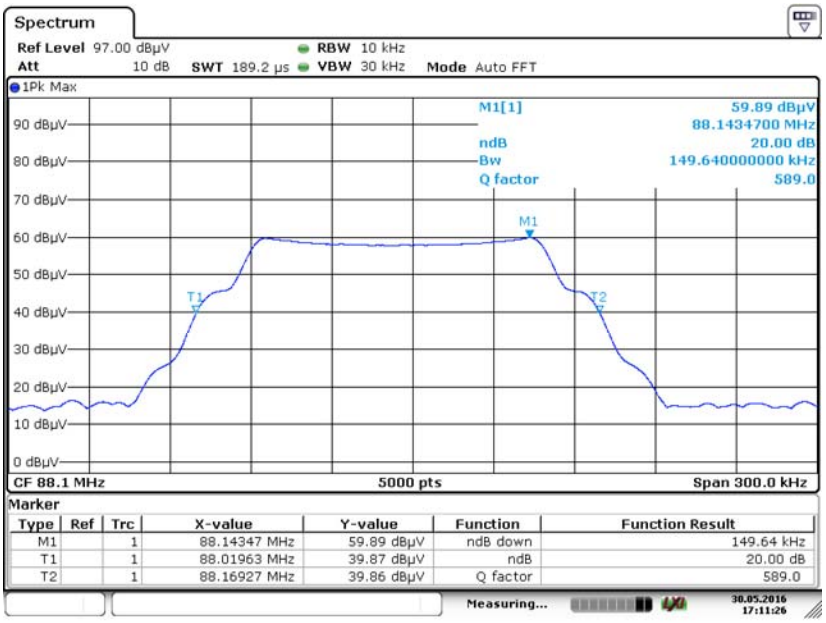

Date: 30.MAY.2016 17:11:26

Test Model	20dB Bandwidth FM Transmitter Channel 90: 97.1MHz	FM Modulation

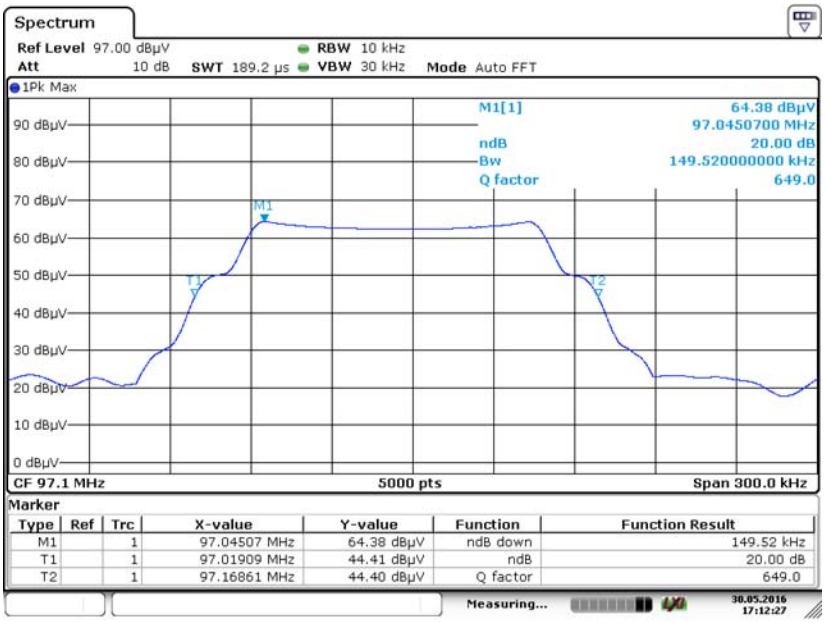

Date: 30.MAY.2016 17:12:26

Test Model	20dB Bandwidth FM Transmitter Channel 198: 107.9MHz	FM Modulation

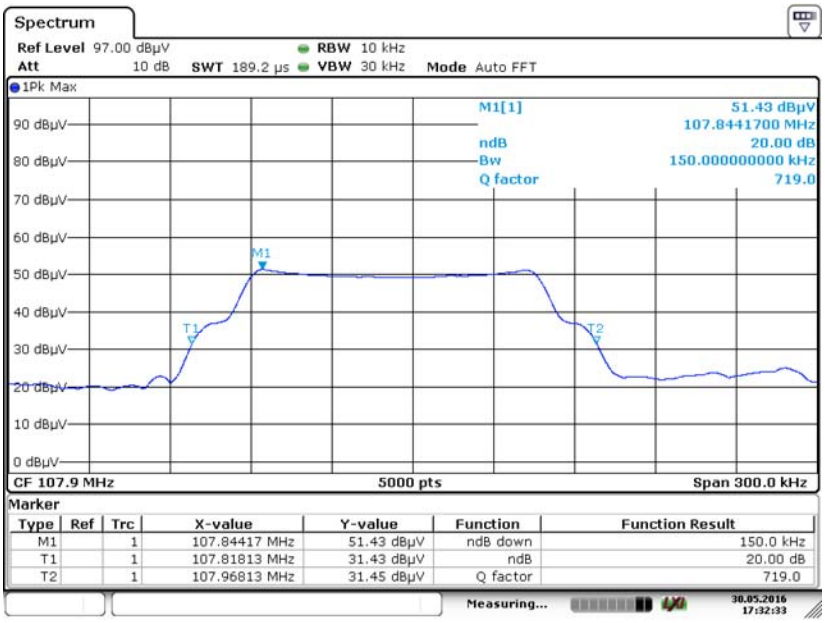

Date: 30.MAY.2016 17:32:33

Test Model	99% Bandwidth FM Transmitter Channel 0: 81.1MHz	FM Modulation

Date: 30.MAY.2016 17:10:42

Test Model	99% Bandwidth FM Transmitter Channel 90: 97.1MHz	FM Modulation

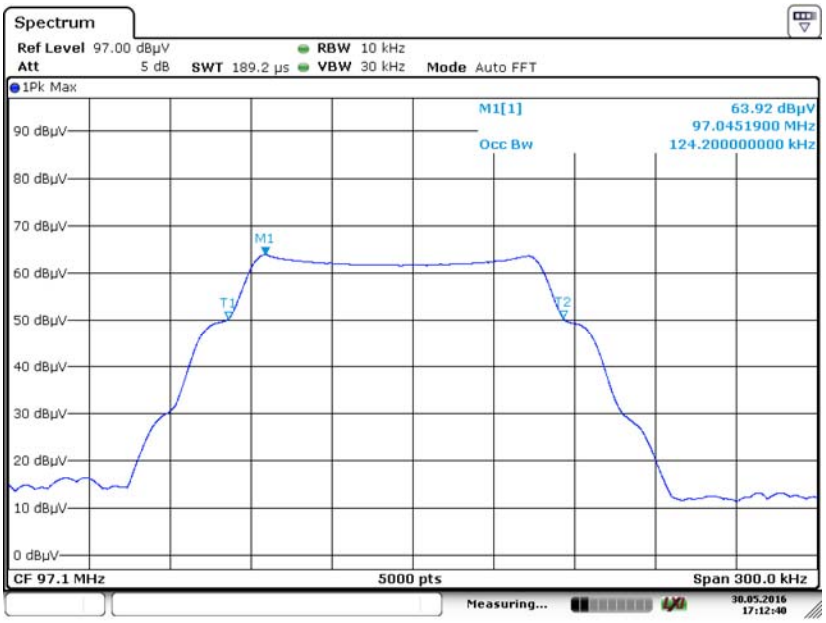

Date: 30.MAY.2016 17:12:40

Test Model	99% Bandwidth FM Transmitter Channel 198: 107.9MHz	FM Modulation

Date: 30.MAY.2016 17:13:45

8.2 RADIATED SPURIOUS EMISSION

8.2.1 Applicable Standard

According to FCC Part 15.239(b) (c) and 15.209

8.2.2 Conformance Limit

Field strength of the fundamental signal shall not exceed the level of the emission specified in the following table

Frequency	Limit (dBuV/m@3m)	Remark
88-108MHz	68	Peak Value
	48	Average Value

According to FCC Part 15.239(c): radiated emissions which fall in the restricted bands, as defined in §15.205(a), must also comply with the radiated emission limits specified in §15.209(a) (see §15.205(c)).
According to FCC Part15.205, Restricted bands.

MHz	MHz	MHz	GHz
0.090-0.110	16.42-16.423	399.9-410	4.5-5.15
10.495-0.505	16.69475-16.69525	608-614	5.35-5.46
2.1735-2.1905	16.80425-16.80475	960-1240	7.25-7.75
4.125-4.128	25.5-25.67	1300-1427	8.025-8.5
4.17725-4.17775	37.5-38.25	1435-1626.5	9.0-9.2
4.20725-4.20775	73-74.6	1645.5-1646.5	9.3-9.5
6.215-6.218	74.8-75.2	1660-1710	10.6-12.7
6.26775-6.26825	123-138	2200-2300	14.47-14.5
8.291-8.294	149.9-150.05	2310-2390	15.35-16.2
8.362-8.366	156.52475-156.52525	2483.5-2500	17.7-21.4
8.37625-8.38675	156.7-156.9	2690-2900	22.01-23.12
8.41425-8.41475	162.0125-167.17	3260-3267	23.6-24.0
12.29-12.293	167.72-173.2	3332-3339	31.2-31.8
12.51975-12.52025	240-285	3345.8-3358	36.43-36.5
12.57675-12.57725	322-335.4	3600-4400	(2)
13.36-13.41			

According to FCC Part15.205, the level of any transmitter spurious emission in Restricted bands shall not exceed the level of the emission specified in the following table

Restricted Frequency(MHz)	Field Strength (μV/m)	Field Strength (dBμV/m)	Measurement Distance
0.009-0.490	2400/F(KHz)	20 log (uV/m)	300
0.490-1.705	24000/F(KHz)	20 log (uV/m)	30
1.705-30	30	29.5	30
30-88	100	40	3
88-216	150	43.5	3
216-960	200	46	3
Above 960	500	54	3

8.2.3 Test Configuration

Test according to clause 7.2 radio frequency test setup 2

8.2.4 Test Procedure

This test is required for any spurious emission that falls in a Restricted Band, as defined in Section 15.205. It must be performed with the highest gain of each type of antenna proposed for use with the EUT. Use the following spectrum analyzer settings:
For Above 1GHz:
The EUT was placed on a turn table which is 1.5m above ground plane.

Maximum procedure was performed on the highest emissions to ensure EUT compliance.
Span = wide enough to fully capture the emission being measured
RBW = 1 MHz
VBW ≥ RBW
Sweep = auto
Detector function = peak
Trace = max hold
For Below 1GHz:
The EUT was placed on a turn table which is 0.8m above ground plane.
Maximum procedure was performed on the highest emissions to ensure EUT compliance.
Span = wide enough to fully capture the emission being measured
RBW = 100 kHz for
VBW ≥ RBW
Sweep = auto
Detector function = peak
Trace = max hold
For Below 30MHz:
The EUT was placed on a turn table which is 0.8m above ground plane.
Maximum procedure was performed on the highest emissions to ensure EUT compliance.
Span = wide enough to fully capture the emission being measured
RBW = 9kHz
VBW ≥ RBW
Sweep = auto
Detector function = peak
Trace = max hold
For Below 150KHz:
The EUT was placed on a turn table which is 0.8m above ground plane.
Maximum procedure was performed on the highest emissions to ensure EUT compliance.
Span = wide enough to fully capture the emission being measured
RBW = 200Hz
VBW ≥ RBW
Sweep = auto
Detector function = peak
Trace = max hold
Follow the guidelines in ANSI C63.10-2013 with respect to maximizing the emission by rotating the EUT, measuring the emission while the EUT is situated in three orthogonal planes (if appropriate), adjusting the measurement antenna height and polarization, etc. A pre-amp and a high pass filter are required for this test, in order to provide the measuring system with sufficient sensitivity. Allow the trace to stabilize. The peak reading of the emission, after being corrected by the antenna factor, cable loss, pre-amp gain, etc., is the peak field strength, which must comply with the limit specified in Section 15.35(b). Submit this data.
Now set the VBW to 10 Hz, while maintaining all of the other instrument settings. This peak level, once corrected, must comply with the limit specified in Section 15.209. If the dwell time per channel of the hopping signal is less than 100 ms, then the reading obtained with the 10 Hz VBW may be further adjusted by a “duty cycle correction factor”, derived from 20log(dwell time/100 ms), in an effort to demonstrate compliance with the 15.209 limit. Submit this data.
Repeat above procedures until all frequency measured was complete.

8.2.5 Test Results

■ Spurious Emission below 30MHz (9KHz to 30MHz)

Temperature:	24℃	Test Date:	April 30, 2016
Humidity:	53 %	Test By:	KK
Test mode:	TX Mode		

Freq. (MHz)	Ant.Pol. H/V	Emission Level(dBuV/m)		Limit 3m(dBuV/m)		Over(dB)	
		PK	AV	PK	AV	PK	AV
--	--	--	--	--	--	--	--

Note: the amplitude of spurious emission that is attenuated by more than 20dB below the permissible limit has no need to be reported.
Distance extrapolation factor =40log(Specific distance/ test distance)(dB);
Limit line=Specific limits(dBuV) + distance extrapolation factor

■ Spurious Emission below 1GHz (30MHz to 1GHz) and Field strength of the fundamental signal

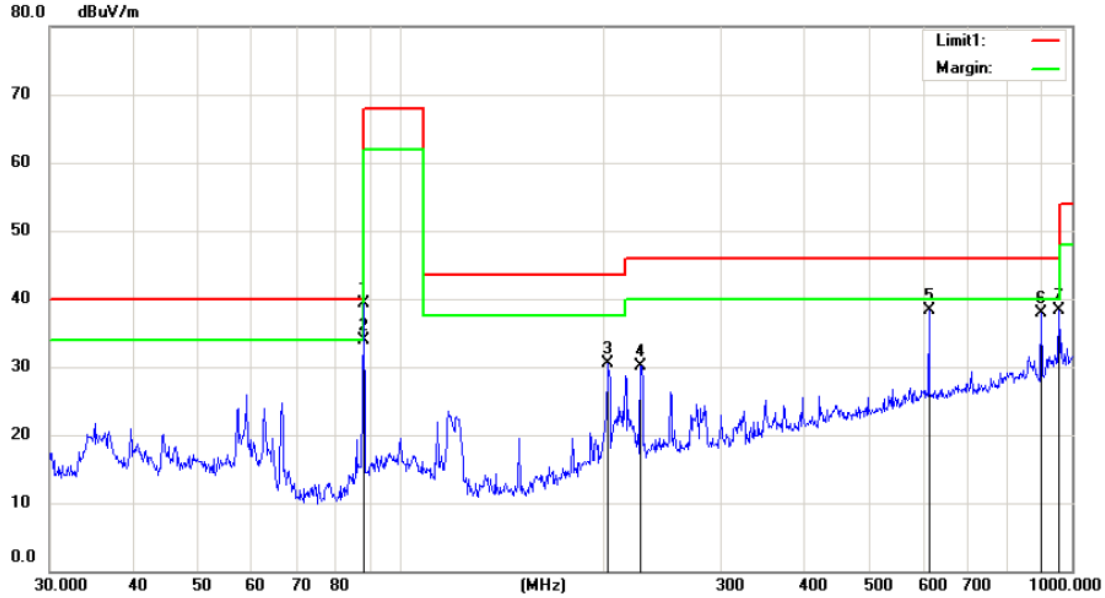

Site 3m Chamber #1 Polarization: *Horizontal* Temperature: 22 C

Limit: (RE)FCC PART 15 CLASS B(FM) Power: DC 12V Humidity: 50 %

EUT: Bluetooth Car Charger(Smart driving Edition)

M/N: BFQ02RM

Mode:88.1MHz

Note:

No.	Mk.	Freq.	Reading Level	Correct Factor	Measure-ment	Limit	Over		Antenna Height	Table Degree	
		MHz	dBuV	dB	dBuV/m	dBuV/m	dB	Detector	cm	degree	Comment
1		88.0330	53.46	-14.24	39.22	68.00	-28.78	QP			
2		88.0330	48.09	-14.24	33.85	48.00	-14.15	AVG			
3		203.5226	43.17	-12.76	30.41	43.50	-13.09	QP			
4		227.6905	41.71	-11.51	30.20	46.00	-15.80	QP			
5	*	612.0641	41.87	-3.61	38.26	46.00	-7.74	QP			
6		900.1473	37.37	0.62	37.99	46.00	-8.01	QP			
7		955.4380	36.66	1.55	38.21	46.00	-7.79	QP			

*:Maximum data x:Over limit !:over margin Operator: KK

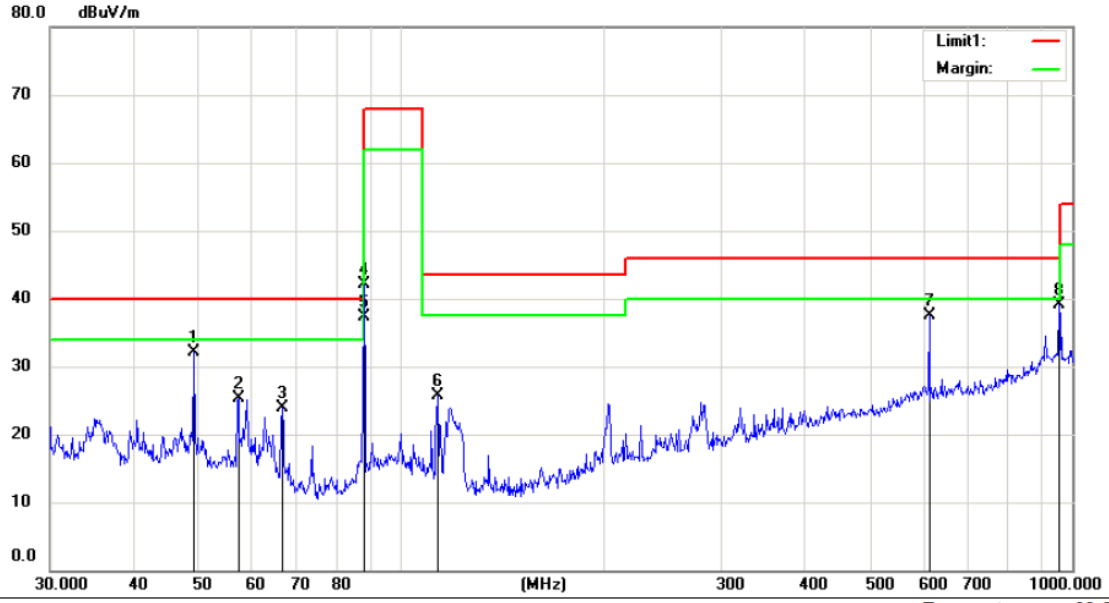

Site 3m Chamber #1 Polarization: *Vertical* Temperature: 22 C

Limit: (RE)FCC PART 15 CLASS B(FM) Power: DC 12V Humidity: 50 %

EUT: Bluetooth Car Charger(Smart driving Edition)

M/N: BFQ02RM

Mode:88.1MHz

Note:

No.	Mk.	Freq.	Reading Level	Correct Factor	Measure-ment	Limit	Over		Antenna Height	Table Degree	
		MHz	dBuV	dB	dBuV/m	dBuV/m	dB	Detector	cm	degree	Comment
1		49.0144	44.53	-12.51	32.02	40.00	-7.98	QP			
2		57.1914	38.14	-12.92	25.22	40.00	-14.78	QP			
3		66.4990	39.49	-15.59	23.90	40.00	-16.10	QP			
4		88.0330	56.26	-14.24	42.02	68.00	-25.98	QP			
5		88.0330	51.49	-14.24	37.25	48.00	-10.75	AVG			
6		113.3161	39.11	-13.44	25.67	43.50	-17.83	QP			
7		612.0641	41.03	-3.61	37.42	46.00	-8.58	QP			
8	*	955.4380	37.49	1.55	39.04	46.00	-6.96	QP			

*:Maximum data x:Over limit !:over margin Operator: KK

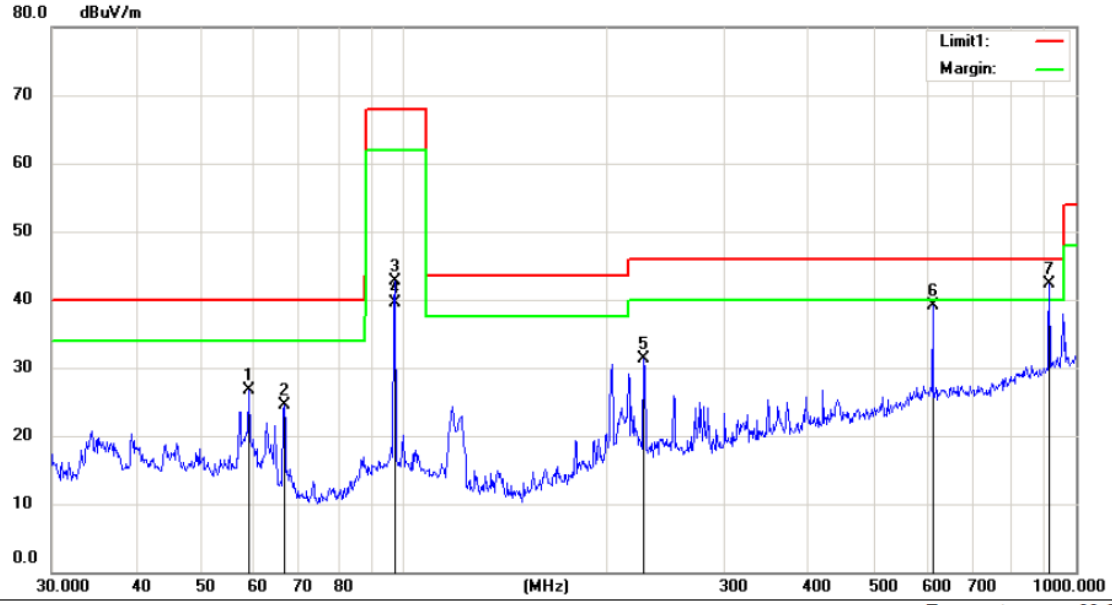

Site 3m Chamber #1 Polarization: ***Horizontal*** Temperature: 22 C

Limit: (RE)FCC PART 15 CLASS B(FM) Power: DC 12V Humidity: 50 %

EUT: Bluetooth Car Charger(Smart driving Edition)

M/N: BFQ02RM

Mode:97.1MHz

Note:

No.	Mk.	Freq.	Reading Level	Correct Factor	Measure-ment	Limit	Over		Antenna Height	Table Degree	
		MHz	dBuV	dB	dBuV/m	dBuV/m	dB	Detector	cm	degree	Comment
1		58.8185	39.58	-12.86	26.72	40.00	-13.28	QP			
2		66.4990	40.12	-15.59	24.53	40.00	-15.47	QP			
3		97.1148	55.04	-12.41	42.63	68.00	-25.37	QP			
4		97.1148	51.86	-12.41	39.45	48.00	-8.55	AVG			
5		227.6905	42.74	-11.51	31.23	46.00	-14.77	QP			
6		612.0641	42.69	-3.61	39.08	46.00	-6.92	QP			
7	*	912.8620	41.39	0.95	42.34	46.00	-3.66	QP			

*:Maximum data x:Over limit !:over margin Operator: KK

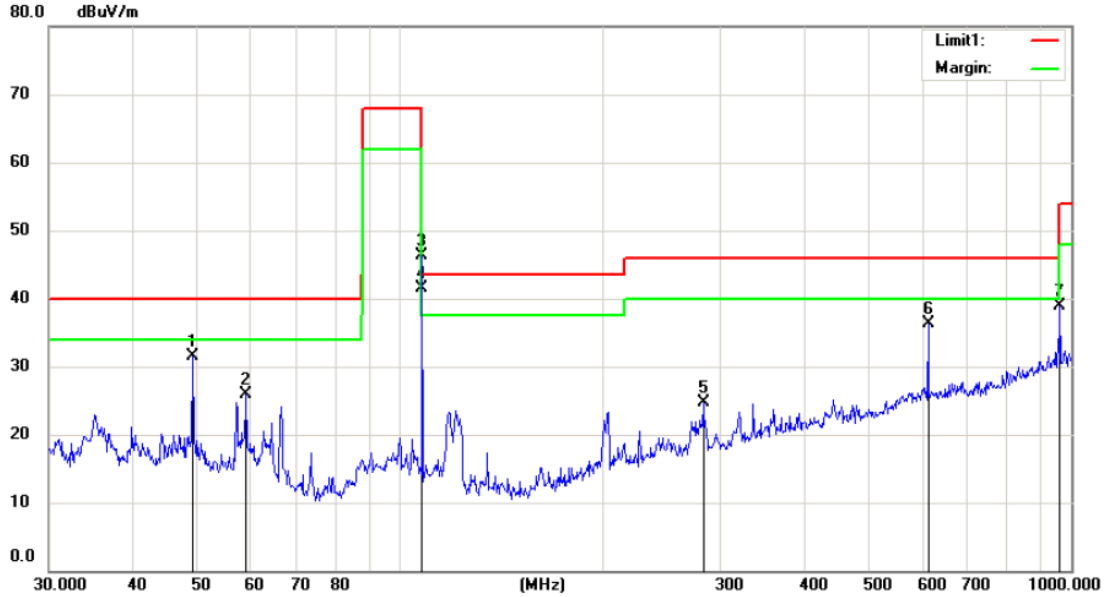

Site 3m Chamber #1 Polarization: *Vertical* Temperature: 22 C

Limit: (RE)FCC PART 15 CLASS B(FM) Power: DC 12V Humidity: 50 %

EUT: Bluetooth Car Charger(Smart driving Edition)

M/N: BFQ02RM

Mode: 107.9MHz

Note:

No.	Mk.	Freq.	Reading Level	Correct Factor	Measure-ment	Limit	Over		Antenna Height	Table Degree	
		MHz	dBuV	dB	dBuV/m	dBuV/m	dB	Detector	cm	degree	Comment
1	*	49.1865	44.10	-12.54	31.56	40.00	-8.44	QP			
2		59.0251	38.80	-12.86	25.94	40.00	-14.06	QP			
3		107.8877	59.21	-12.84	46.37	68.00	-21.63	QP			
4		107.8877	54.34	-12.84	41.50	48.00	-6.50	AVG			
5		282.9851	34.57	-9.87	24.70	46.00	-21.30	QP			
6		612.0641	39.92	-3.61	36.31	46.00	-9.69	QP			
7		962.1622	37.25	1.68	38.93	54.00	-15.07	QP			

*:Maximum data x:Over limit !:over margin Operator: KK

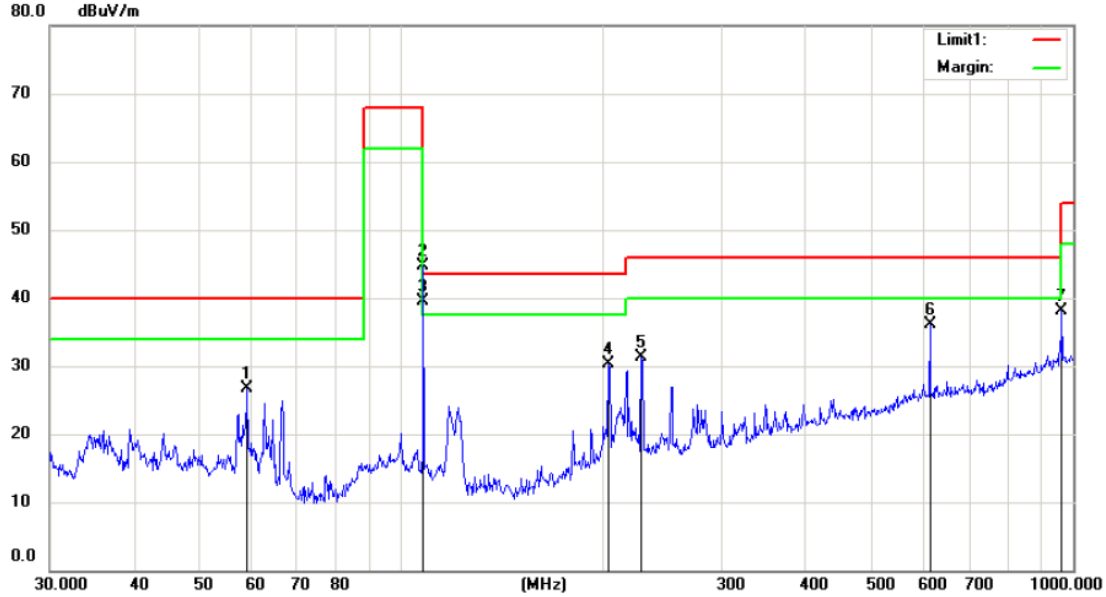

Site 3m Chamber #1 Polarization: *Horizontal* Temperature: 22 C

Limit: (RE)FCC PART 15 CLASS B(FM) Power: DC 12V Humidity: 50 %

EUT: Bluetooth Car Charger(Smart driving Edition)

M/N: BFQ02RM

Mode: 107.9MHz

Note:

No.	Mk.	Freq.	Reading Level	Correct Factor	Measure-ment	Limit	Over		Antenna Height	Table Degree	
		MHz	dBuV	dB	dBuV/m	dBuV/m	dB	Detector	cm	degree	Comment
1		59.0251	39.54	-12.86	26.68	40.00	-13.32	QP			
2		107.8877	57.56	-12.84	44.72	68.00	-23.28	QP			
3		107.8877	52.34	-12.84	39.50	48.00	-8.50	AVG			
4		203.5227	43.07	-12.76	30.31	43.50	-13.19	QP			
5		227.6906	42.80	-11.51	31.29	46.00	-14.71	QP			
6	*	612.0641	39.62	-3.61	36.01	46.00	-9.99	QP			
7		962.1622	36.38	1.68	38.06	54.00	-15.94	QP			

*:Maximum data x:Over limit !:over margin Operator: KK

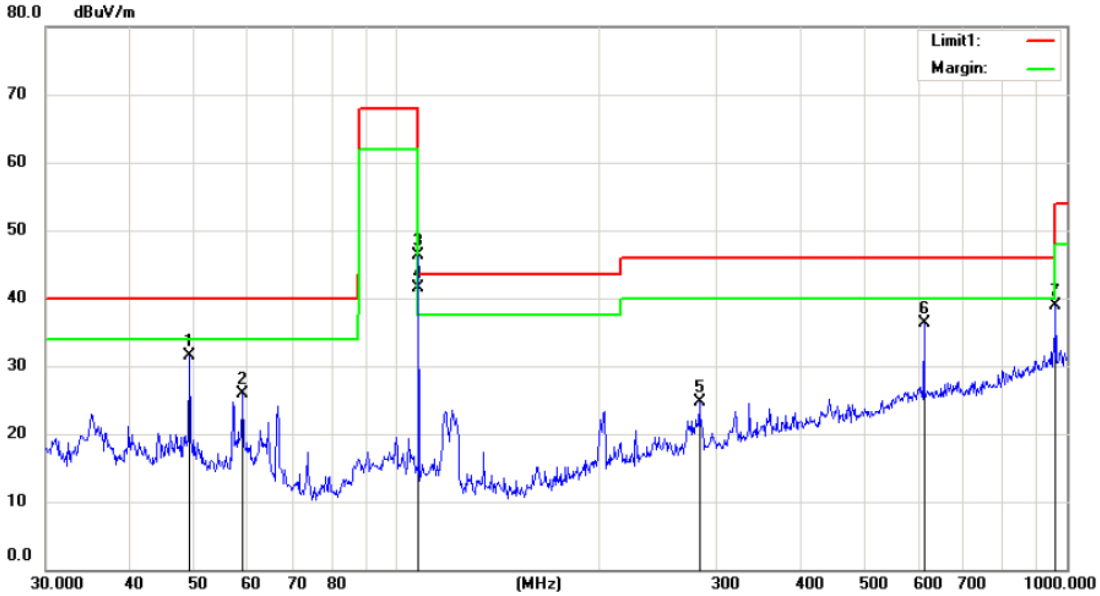

Site 3m Chamber #1 Polarization: *Vertical* Temperature: 22 C

Limit: (RE)FCC PART 15 CLASS B(FM) Power: DC 12V Humidity: 50 %

EUT: Bluetooth Car Charger(Smart driving Edition)

M/N: BFQ02RM

Mode: 107.9MHz

Note:

No.	Mk.	Freq.	Reading Level	Correct Factor	Measure-ment	Limit	Over		Antenna Height	Table Degree	
		MHz	dBuV	dB	dBuV/m	dBuV/m	dB	Detector	cm	degree	Comment
1	*	49.1865	44.10	-12.54	31.56	40.00	-8.44	QP			
2		59.0251	38.80	-12.86	25.94	40.00	-14.06	QP			
3		107.8877	59.21	-12.84	46.37	68.00	-21.63	QP			
4		107.8877	54.34	-12.84	41.50	48.00	-6.50	AVG			
5		282.9851	34.57	-9.87	24.70	46.00	-21.30	QP			
6		612.0641	39.92	-3.61	36.31	46.00	-9.69	QP			
7		962.1622	37.25	1.68	38.93	54.00	-15.07	QP			

*:Maximum data x:Over limit !:over margin Operator: KK

8.3 CONDUCTED EMISSION TEST

8.3.1 Applicable Standard

According to FCC Part 15.207(a)

8.3.2 Conformance Limit

Conducted Emission Limit		
Frequency(MHz)	Quasi-peak	Average
0.15-0.5	66-56	56-46
0.5-5.0	56	46
5.0-30.0	60	50
Note: 1. The lower limit shall apply at the transition frequencies 2. The limit decreases in line with the logarithm of the frequency in the range of 0.15 to 0.50MHz.		

8.3.3 Test Configuration

Test according to clause 7.3 conducted emission test setup

8.3.4 Test Procedure

The EUT was placed on a table which is 0.8m above ground plane.
Maximum procedure was performed on the highest emissions to ensure EUT compliance.
Repeat above procedures until all frequency measured were complete.

8.3.5 Test Results

Not applicable.

The EUT power supply is DC 12V/24V.

8.4 ANTENNA APPLICATION

8.4.1 Antenna Requirement

Standard	Requirement
FCC CRF Part 15.203	An intentional radiator shall be designed to ensure that no antenna other than that furnished by the responsible party shall be used with the device. The use of a permanently attached antenna or of an antenna that uses a unique coupling to the intentional radiator shall be considered sufficient to comply with the provisions of this section. The manufacturer may design the unit so that a broken antenna can be replaced by the user, but the use of a standard antenna jack or electrical connector is prohibited. This requirement does not apply to carrier current devices or to devices operated under the provisions of §15.211, §15.213, §15.217, §15.219, or §15.221. Further, this requirement does not apply to intentional radiators that must be professionally installed, such as perimeter protection systems and some field disturbance sensors, or to other intentional radiators which, in accordance with §15.31(d), must be measured at the installation site. However, the installer shall be responsible for ensuring that the proper antenna is employed so that the limits in this part are not exceeded.

For intentional device, according to FCC 47 CFR Section 15.203, an intentional radiator shall be designed to ensure that no antenna other than that furnished by the responsible party shall be used with the device.

8.4.2 Result

PASS.

The EUT has 1 antenna: a Monopole antenna for FM;

Note: ☒ Antenna use a permanently attached antenna which is not replaceable.
☐ Not using a standard antenna jack or electrical connector for antenna replacement
☐ The antenna has to be professionally installed (please provide method of installation)

which in accordance to section 15.203, please refer to the internal photos.