Operating Instructions

Honeywell

OELD
Smart Junction Box

(3018M5000_1-3)

Content

1 Safety 2
1.1 Safety Warnings and Information 2
1.2 Disposal 2
1.3 Waste Electrical and Electronic Equipment (WEEE) Directive 3
1.4 Important Information 3
2 Overview 5
2.1 Introduction 5
2.2 Optional Accessories 7
2.2.1 Pipe Mount Kit (1226A0358) 7
2.2.2 Ceiling Mount Bracket Kit (1226A0355) 7
2.2.3 Sunshade (94000-C-1018) 7
3 Installation 8
3.1 Siting 8
3.2 Mechanical Installation 8
3.2.1 Installation to a Flat Surface 8
3.2.2 Optional pipe and celling mount installation 9
3.2.3 Using Excel Mounting Plate 9
3.3 Electrical Installation 10
4 Electrical Connections 11
4.1 Power Supply 12
4.1.1 Example Cable Length Calculation 12
4.2 Cabling Recommendation 12
4.3 Earth Regimes 13
4.4 Fix the 4-20mA Input 13
5 Configuration 14
5.1 General 14
5.2 Configuration Process 15
6. Operation 16
6.1 LCD 16
6.1.1 Start-up 16
6.1.2 Normal Operation 17
6.1.3 Display Screen 17
6.2 BLE Communication (Optional) 18
6.3 Alternative communications (SHC-1) 18
7. OELD Mobile App 20
7.1 Install mobile App 20

7.2 Run OELD Mobile App 20
8. Maintenance 24
8.1 General 24
8.2 Display Module Replacement 24
9. Faults and Warning 25
10 Specifications 26
11. Ordering Information 28

1 Safety

1.1 Safety Warnings and Information

WARNING

1. Installation must be in accordance with the recognized standards of the appropriate authority in the country concerned. For Europe see EN 60079-14 and EN 60079-29-2.
2. Do not open the enclosure when energized or when an explosive atmosphere may be present.
3. Operators should be fully aware of the action to be taken if the gas concentration exceeds the alarm level.
4. Do not modify or alter the construction of the product as essential safety and certification requirements may be invalidated.
5. Assessed under ATEX only for ignition hazards.
6. Access to the interior of the product, when carrying out any work, must be conducted only by trained personnel.
7. Do not use the OELD LCD backlit status indication for safety-related purposes.
8. In order to maintain electrical safety, the unit must not be operated in atmospheres of more than 21% oxygen.
9. To minimize the risk of electrostatic charge, provisions shall be made for an adequate grounding, equipment shall be installed in a manner so that accidental discharge shall not occur

Special Conditions for Safe Use – Terminals

In order to comply with the ATEX Certification, the following special conditions of use must be adhered to: -

1. Not more than one single or multiple strand lead shall be connected into either side of any terminal, unless multiple conductors have been joined in a suitable manner, e.g. two conductors into a single insulated crimped boot lace ferrule.

2. Leads connected to the terminals shall be insulated for the appropriate voltage and this insulation shall extend to within 1 mm of the terminal throat.

3. All terminal screws, used and unused, shall be tightened down to between 0.5 N m and 0.7 N m.

4. The terminals shall only be installed and wired with cable in an ambient temperature of -10 °C to +80 °C.

1.2 Disposal

Dispose of the product in accordance with local regulations. The materials used are: -

Enclosure	Aluminum or SS316
Lid	Aluminum or SS316
Continuity plate	Zinc plated steel

1.3 Waste Electrical and Electronic Equipment (WEEE) Directive

This symbol indicates that this product and/or parts of the product may not be treated as household or municipal waste. Waste electrical products (end of life) should be recovered/recycled where suitable specialist WEEE disposal facilities exist. For more information about recycling of this product, contact your local authority, our agent/distributor or the manufacturer.

1.4 Important Information

This manual is for use with the OELD junction box only.

Honeywell Analytics can take no responsibility for installation and/or use of its equipment if not done so in accordance with the appropriate issue and/or amendment of the Operating Instructions.

The reader of these Operating Instructions should ensure that it is appropriate in all details for the exact equipment to be installed and/or operated. If in doubt, contact Honeywell Analytics for advice.

The following types of notices are used throughout these Operating Instructions:

WARNING

Identifies a hazardous or unsafe practice which could result in severe injury or death to personnel.

Caution: Identifies a hazardous or unsafe practice which could result in minor injury to personnel, or product or property damage.

Note: Identifies useful/additional information.

Every effort has been made to ensure the accuracy of this document, however, Honeywell Analytics can assume no responsibility for any errors or omissions in this document or their consequences.

Honeywell Analytics would greatly appreciate being informed of any errors or omissions that may be found in the content of this document.

For information not covered in this document, or if there is a requirement to send comments/corrections about this document, please contact Honeywell Analytics using the contact details given on the back page.

Honeywell Analytics reserve the right to change or revise the information supplied in this document without notice and without obligation to notify any person or organization of such revision or change. If information is required that does not appear in this document, contact the local distributor/agent or Honeywell Analytics.

1.5 FCC Information

This device complies with part 15 of the FCC Rules. Operation is subject to the following two conditions.

1) This device may not cause harmful interference, and
2) This device must accept any interference received, including interference that may cause undesir ed operation.

This transmitter must not be co-located or operated in conjunction with any other antenna or transmitter. This equipment complies with FCC radiation exposure limits set forth for an uncontrolled environment. End users must follow the specific operating instructions for satisfying RF exposure compliance.

NOTE: This equipment has been tested and found to comply with the limits for a Class A digital device, pursuant to part 15 of the FCC Rules. These limits are designed to pro-vide reasonable protection against harmful interference when the equipment is operated in a commercial environment.

This equipment generates, uses, and can radiate radio frequency energy and, if not installed and used in accordance with the instruction manual, may cause harmful interference to radio communications. Operation of this equipment in a residential area is likely to cause harmful interference in which case the user will be required to correct the interference at his own expense.

CAUTION : Changes or modifications not expressly approved by the manufacturer responsible for compliance could void the user's authority to operate the equipment.

1.6 IC Information

This device complies with Industry Canada's lisence-exempt RSSs. Operation is subject to the following two conditions:
1) This device may not cause interference; and
2) This device must accept any interference, including interference that may cause undesired operation of the device

WARNING

OELD has been tested and meets applicable limits for radio frequency (RF) exposure. According to the RF Exposure report, minimum 20 cm separate distance is required.

2 Overview

2.1 Introduction

OELD is an ATEX certified Ex d junction box for use with sensors that feature a 4-20mA output. The sensor is Searchpoint Optima Plus or Searchline Excel. It provides a local visual status indication, and a Bluetooth low energy interface for remote monitoring and configuration using mobile device. OELD is ATEX approved for use in either Zone 1 (gas) or Zone 21 (dust) hazardous areas as well as cULus approved for use in Class I Division 1 or Class II Division 1.

OELD has five entries – either M25 or NPT3/4. It is supplied with three Ex d certified blanking plugs. Transport plugs are fitted to the other two entries, which must be replaced with a sensor, suitable cable glands or blanking plugs before use.

Internally, the box has a continuity plate with two earth connection points, and a 12-way terminal block. The OELD features a three-color backlit (green, yellow and red), and customized 7-segment liquid crystal display. In operation, the LCD backlit provides a status indication as follows:

- Green – Normal operation or Warning
- Yellow – Fault or Inhibit
- Red – Alarm (level is configurable)
- Blue – BLE pairing / connection

WARNING

Do not use the OELD LCD backlit status indication for safety-related purposes.

The OELD is configured using mobile device over Bluetooth Low Energy. The following parameters can be configured:

- Threshold for local alarm indicator (red lights)
- 4-20mA input level for local display
- Gas name and measurement units for local display

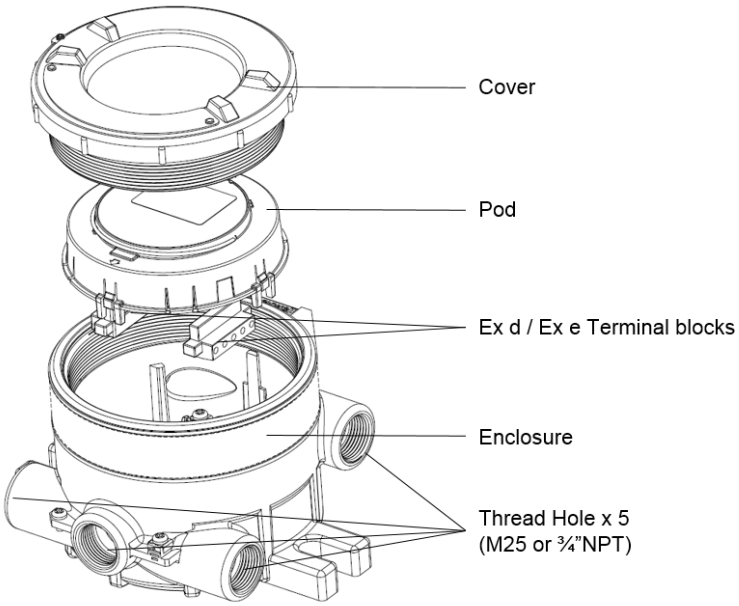
Cover
Pod
Ex d / Ex e Terminal blocks
Enclosure
Thread Hole x 5
(M25 or ¾"NPT)

2.2 Optional Accessories

2.2.1 Pipe Mount Kit (1226A0358)

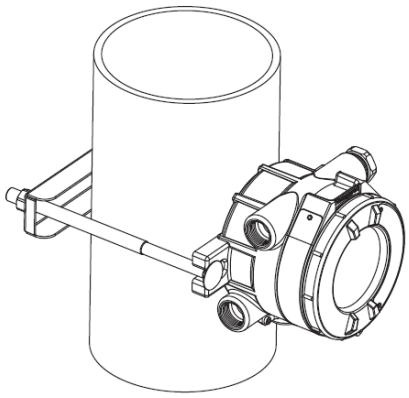

The Pipe Mount kit (1226A0358) allows the OELD to be mounted to pipe from 2”-6” (50-150mm) in diameter. The kit includes the pipe mount bracket, two carriage bolts, nuts, and lock washers.

2.2.2 Ceiling Mount Bracket Kit (1226A0355)

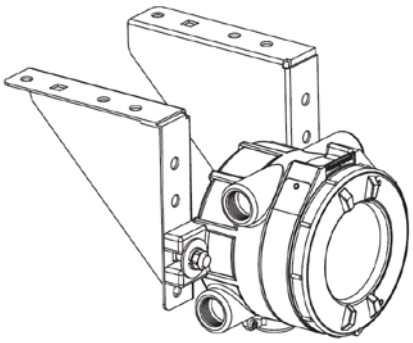

The optional Ceiling Mount Bracket Kit (1226A0355) allows the OELD Transmitter to be mounted to the ceiling. The kit includes two stainless steel ceiling mount brackets, bolts, and nuts.

2.2.3 Sunshade (94000-C-1018)

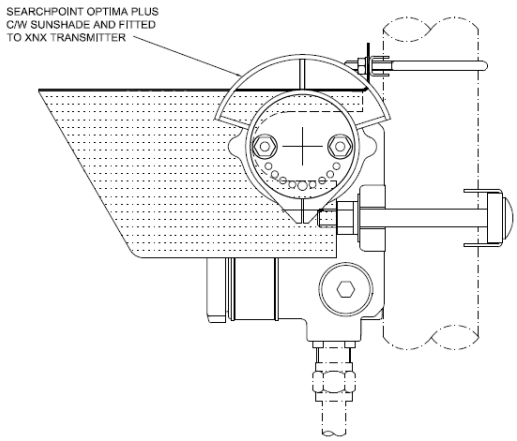

An optional sunshade is available which covers the OELD and can extend over either side to also protect a Searchpoint Optima or Searchline Excel

The sunshade slots over the OELD mounting bolts so no additional fixings are required. The sunshade is stainless steel 316.

Use the sunshade to reduce the effects of direct solar heating.

3 Installation

3.1 Siting

The placement of gas detectors should be determined following the advice of:

- experts having specialist knowledge of gas dispersion
- experts having knowledge of the process plant system and equipment involved
- safety personnel
- engineering personnel

The agreement reached on the location of detectors should be recorded.

Guidance on the positioning of gas detectors to provide the best detection coverage is contained in IEC/EN 60079-29-2 and other national Codes of Practice. It is recommended that the installation designer consults these Codes of Practice when determining where detectors are to be located.

3.2 Mechanical Installation

The OELD can be mounted in a number of ways using the integral mounting tabs. The OELD can be attached to flat wall surfaces or to Unistrut®. With the optional Pipe Mount kit, the unit can be mounted to pipe of diameter 2” to 6” (50 to 150mm). A ceiling mount bracket kit (1226A0358) is also available.

3.2.1 Installation to a Flat Surface

OELD may be fixed directly to a suitable flat surface, using the integral mounting points (dimensions shown below).

Note: When installing OELD ensure that the correct sensor orientation is considered. Refer to the sensor manufacturer’s instructions.

Ensure that mounting bolts are fully tightened and suitable locking washers are used.

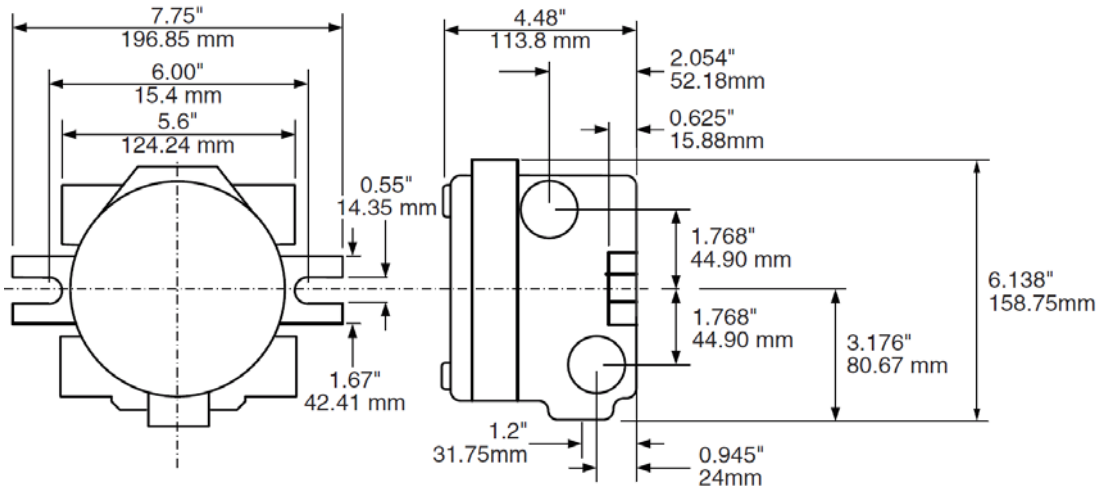

3.2.2 Optional pipe and celling mount installation

OELD may be fixed to a vertical pipe of 50 to 150 mm (2 to 6 inches) in diameter using the optional Pipe Mounting Bracket. The pipe mounting bracket kit (1226A0358) consists of one bracket, two sets of carriage bolts, nuts and lock washers.

The optional Ceiling Mount Bracket Kit (1226A0355) allows the OELD to be mounted to the ceiling. Kit includes: (2) Stainless Steel Ceiling Mount Brackets, bolts and nuts.

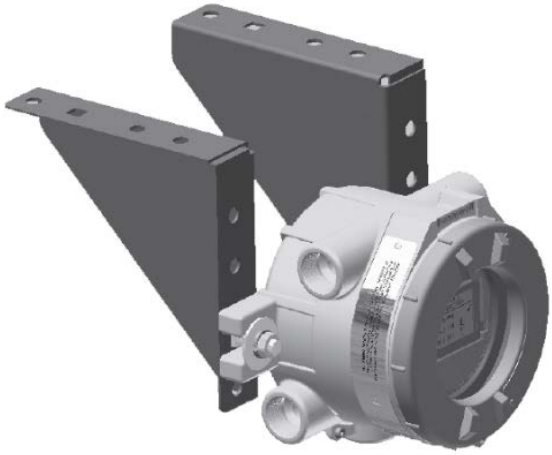

3.2.3 Using Excel Mounting Plate

OELD may be fixed to the Excel mounting plate (2104D0237) which is available to be ordered with Excel. Two of M10 tapped holes, ‘K’, is for OELD. Refer Excel technical manual for other details. The mounting plate fixings are not supplied.

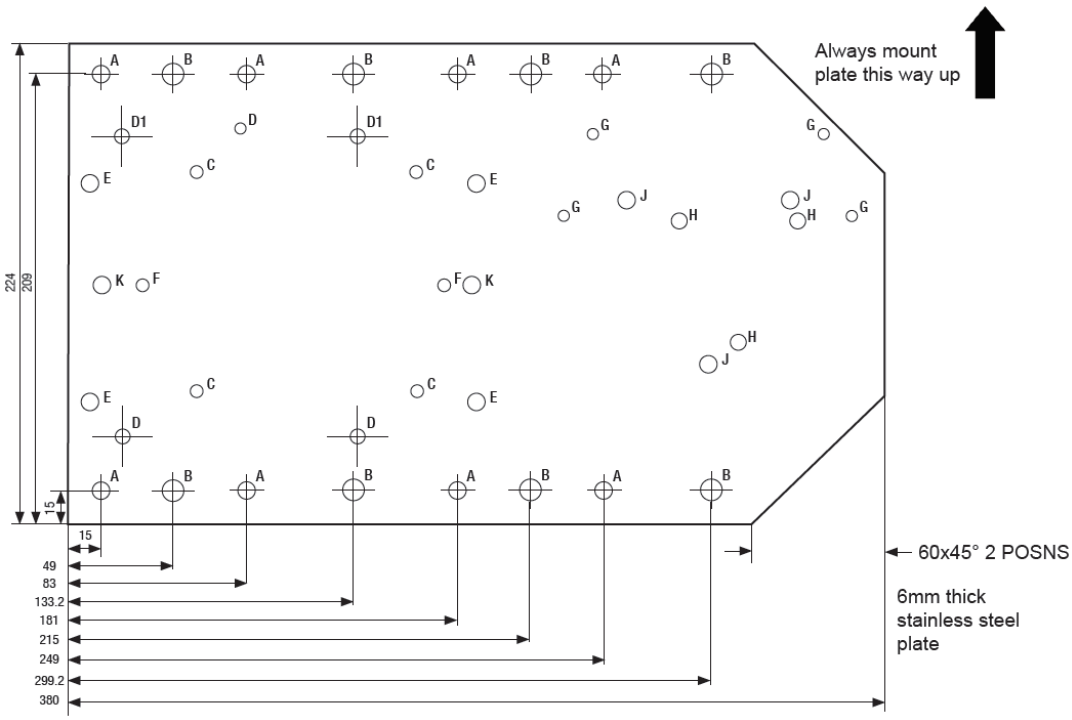

3.3 Electrical Installation

1. Remove the lid.
2. Lift the handle and take out the internal display module.
3. Fit a suitable approved Ex d cable gland to the required cable entry for the field cable.
4. Fit a sensor (the Optima Plus or Excel) to a suitable entry. (Refer to sensor manual for specific information). Use sealing washers where necessary to maintain the ingress protection rating (IP66/67). Use one of the supplied locking rings to connect to the earth continuity plate.
5. Fit approved Ex d blanking plugs to all unused cable entries. Use sealing washers where necessary to maintain the ingress protection rating (IP66/67).

Caution: Ensure that all red transport plugs have been replaced with the correct blanking plugs, sensor or cable glands.

6. Make electrical connections (see Chapter 4).
7. Carefully replace the display module and fully tighten the lid

Caution: Take care to avoid trapping cables when replacing the display module.

4 Electrical Connections

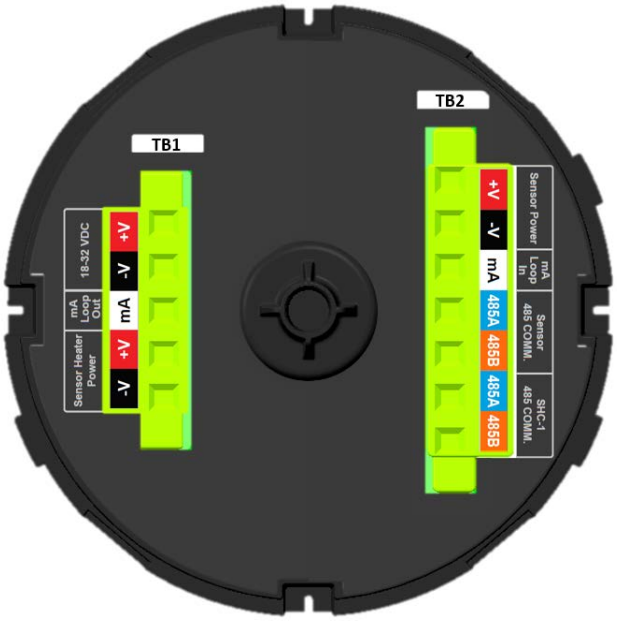

Terminal Block 1			
Number	Marking	Color	Description
1	V+	Red	V+ Field Power
2	V-	Black	V- Field Power
3	mA	White	mA Signal to Field Wiring
4	V+	Red	Reserved for Excel Cross-duct Heater
5	V-	Black	Reserved for Excel Cross-duct Heater
Terminal Block 2			
Number	Marking	Color	Description
1	V+	Red	V+ Sensor Power
2	V-	Black	V- Sensor Power
3	mA	White	mA Signal to Sensor
4	485A	Blue	RS485+ to Sensor
5	485B	Orange	RS485- to Sensor
6	485A	Blue	Reserved for SHC-1
7	485B	Orange	Reserved for SHC-1

Note: OELD is reverse polarity protected.

Spare conductors must be terminated in a spare terminal. Wiring must be in accordance with local, national and/or company regulations. Bare conductors must be avoided.

Refer to individual sensor manuals for sensor wiring details. Specific wiring diagrams for some commonly used sensors are provided in the Appendix.

The mA loop voltage is Max 32 VDC and current is Max 22 mA.

4.1 Power Supply

OELD requires an isolated voltage supply of 18 - 32 Vdc (nominal 24 Vdc), which is suitably approved for the region (for example, UL approved). Power consumption is 2 W maximum.

Refer to individual sensor manuals for sensor specific limits and power consumption.

Ensure that the minimum required supply voltage is present at the sensor, taking into account the voltage drop due to cable resistance.

Note: Make allowance for the insertion loss resistance.

The maximum loop resistance in the field cable is calculated as follows:

$$R_{loop} = \frac{V_{controller} - V_{detector\ min}}{I_{detector}}$$

4.1.1 Example Cable Length Calculation

Example – OELD with Searchpoint Optima Plus:

Searchpoint Optima Plus requires a voltage supply of 18 – 32 Vdc. Its power consumption is 5 W. Therefore total power consumption including OELD is 7 W maximum.

The controller is supplying a nominal 24 Vdc (V controller) and the detector minimum allowable voltage is 18 Vdc (V detector min), therefore the maximum allowable voltage drop between the controller and detector is 6 Vdc; this means a voltage drop of 3 V in each core (+ve core and -ve core).

Power consumption of the detector is 7 W. The current required to drive the detector at the minimum voltage is (I = P / V), 7 / 18 = 388 mA (I detector).

So, the maximum field cable loop resistance (R loop) = 6 / 0.388 = 15.4 Ω, or 7.7 Ω per core.

The following tables show the maximum cable distances between the controller and OELD with Searchpoint Optima Plus for different cable options, assuming a voltage drop of 3 V in each core. The tables are examples only and actual cable parameters and source power supply voltage for the application should be used to calculate the maximum cable distance allowed at the installation site.

Maximum cable length for the example calculation above			
Typical cable data		Maximum cable length (L)	
Cable size (cross sectional area)	Cable resistance Ω/km (Ω/mile)	Metres	Feet
0.5 mm2 (20 AWG*)	36.8 (59.2)	245	808
1.0 mm2 (17 AWG*)	19.5 (31.4)	462	1516
1.5 mm2 (16 AWG*)	12.7 (20.4)	709	2326
2.0 mm2 (14 AWG*)	10.1 (16.3)	891	2923
2.5 mm2 (13 AWG*)	8.0 (12.9)	1125	3691
*nearest equivalent			

Note: Sufficient operational margins should be allowed

4.2 Cabling Recommendation

The cable used must be appropriate for the hazardous area classification and meet local, national and/or company regulations. The use of industrial grade, screened field cable is recommended.

For example, three-core copper cable with screen (minimum 90% coverage) and suitable mechanical protection (e.g. steel wire armor) to suit M20 gland entry.

The conductor size for the terminals is 0.2 – 2.5 mm^2 (24 - 12 AWG). The OELD terminals will accept only copper wire sizes in the range 0.2 – 2.5 mm^2 (solid core), 0.2 – 2.5 mm^2 (stranded core), or 24 – 12 AWG and temperature rating of conductor is greater than 80°C. The terminals should be torqued to 5.5kgf.cm (5 lb-in).

Ensure the cable gland is installed correctly and fully tightened. All unused cable/conduit entries must be sealed with a suitable certified blanking plug.

4.3 Earth Regimes

Caution: Any earthing regime employed must avoid earth loops.

The following information is provided to assist with proper earthing of OELD:

• OELD has a continuity plate which is in contact with the internal earth points provided (see Electrical Connections). This is to facilitate connection of the sensor to protective earth.

• Locking rings are supplied which can be used to connect a sensor body or cable gland to the continuity plate where necessary.

• Field cable screens should be connected to instrument earth at the control room. The other end of the field cable screen may be terminated in a spare terminal of OELD. It should not be connected to the continuity plate.

4.4 Fix the 4-20mA Input

After electrical commission it is recommended to calibrate current input to OELD by using mobile device.

The electrical adjustment procedure is as follows.

1. Short or open the current input ports at the OELD
2. Carry out mA input calibration with mobile device (**Configure->Local display->Calibrate mA input**)
3. Re-wire the current input (mA)

For more information please refer to 7 OELD Mobile App

5 Configuration

5.1 General

OELD has several configurable parameters, which are set using mobile device only. These are the threshold for local alarm indication, mA input level settings, RS485 communication settings, confidence signal of the green light and sensor settings such as full scale range, measurement unit and gas name.

1. Threshold for local alarm indication

The gas reading at which OELD indicates an alarm (flashing red lights) can be set between 10 and 65 %FSD. The default setting is 20 %FSD.

Note: This setting is local to OELD and applies only to the red lights in the OELD backlit. Changing the level will have no effect on alarm levels configured in the sensor, or in the control room.

2. mA input level settings

The sensors transmit specific mA output to indicate the sensor status. The mA input to OELD can be determined to specific sensor status according to the configured mA input level settings. The mA input settings are sensor status (warning, fault or inhibit) and message on OELD local display. The default settings are as below.

Sensor Status	mA input settings		
	Optima Plus Non-HART	Optima Plus HART	Searchline Excel
Fault	0-1mA	x	0mA
Inhibit	2mA	2mA	2mA
Warning	3mA	3mA	x
Beam Block	x	x	2.5mA
Low Signal	x	x	3mA
Gas Reading	4-20mA	4-20mA	4-20mA
Over-Range	21mA +	21mA +	21mA +

3. Confidence signal of the green light

The green lights indicating normal operation can be set to confidence signal to indicate OELD is alive by flashing green lights. The flashing interval is 10 seconds. If set the green backlit will flash every 10 seconds in normal condition

4. Sensor settings

The sensor settings are full scale range, measurement unit, display resolution and gas name. The sensor settings are used to convert the 4-20mA input to gas concentration and to show it on OELD LCD.

WARNING

Do not use the OELD LCD backlit status indication for safety-related purposes.

5.2 Configuration Process

Note: Configuration is done by using mobile device only. There is no local interface to configure OELD.

To configure OELD, it should be connected to mobile device over Bluetooth Low Energy first. The blue backlit of OELD will flash when a mobile device pairs with OELD so that an operator can easily find out and identify the target OELD. When OELD is connected to mobile device successfully the blue backlight will stay on in normal condition. If the sensor is in abnormal condition, appropriate backlit of OELD will flash according to sensor status instead of indicating BLE connection.

1. Tab the OELD mobile app icon on the mobile device to execute the app
2. Log in the mobile app by entering appropriate user ID and password
3. Scan the BLE devices nearby
4. Select the target OELD in the scanned BLE device list
5. Find out and identify the OELD flashing blue backlit
6. If the identified OELD is correct one, confirm the connection
7. Mobile app will establish the connection with OELD then move to main status screen

For detailed connection procedure refer to section 6.2 BLE communication.

If OELD is connected to mobile device, a user can configure OELD via configure menu on the mobile application. For more details on operation of mobile application, refer to 7 OELD Mobile App

After successful configuration, terminate the BLE connection from the OELD so that other mobile device can communicate with the OELD.

Note: After configuration it is recommended to read back and check the configuration from OELD to make sure that the intended configuration changes are applied correctly.

Caution: Only one BLE connection is allowed. Terminate the BLE connection when a configuration activity is done

6. Operation

6.1 LCD

6.1.1 Start-up

OELD's start-up sequence takes approximately 60 seconds depending on the sensor outputs. The first step of the start-up sequence is LCD and backlit test. During LCD test each segment of LCD will be on one by one while LCD backlit will flash in various colors. And OELD shows software version and various configuration information as below. During start-up sequence except LCD test, the green light will be on. After the start-up period the lights will indicate the sensor output status.

Note: Depending on the duration of the sensor start up routine, the sensor may still be initialising. Therefore OELD may indicate Fault or Inhibit for a short time before indicating Normal status.

6.1.2 Normal Operation

During normal operation, the LCD backlit provides an indication of the sensor status based on the sensor 4-20 mA output as follows:

Sensor Output	OELD Backlit		Typical Status
	Color	Flashing	
Less than 1.5mA	Yellow	Yes	Fault
1.5 to less than 2.5mA	Yellow	No	Inhibit
2.5 to less than 3.5mA	G Y G	Alternating Yellow	Warning
3.5mA to less than Alarm Threshold*	Green	No	Normal
Greater than or equal to Alarm Threshold*	Red	Yes	Hazardous Gas Concentration
3.5mA to less than Alarm Threshold**	Blue	No	Normal

* Alarm threshold is configurable between 10 and 65 %FSD (5.6 mA to 14.4 mA)

**When sensor output is normal and BLE connection is established, the OELD backlit will be Blue

Note: The tolerance on the switching thresholds is ±0.3 mA as default. A user can change the switching threshold by changing the mA input range.

Note: The visual output of OELD is dependent on the sensor 4-20 mA output and OELD unit status. Use the Bluetooth Low Energy communications to the OELD (where supported) to gain further diagnostic information for the connected sensor and OELD.

6.1.3 Display Screen

The OELD display features an LCD with numeric/bar-graph gas concentration data, alpha-numeric warning and status indication. The LCD also has a backlit with hi-intensity multi-color LED to show NORMAL, ALARM and FAULT status.

During normal operation the instrument LCD shows a steady GREEN backlight. In case of Gas Alarm or Fault it displays a flashing RED / YELLOW backlight. The screen is visible through the window of the OELD top cover. The display shows the gas concentration (both graphically and numerically), full scale range, measurement units, alarm/ fault status and etc.

Note: The OELD display may become sluggish in sub-zero temperatures and possibly unclear at temperatures below -40 °C. The display is not damaged and recovers when the temperature increases.

Note: The refresh rate of OELD display will change up to 6 seconds at lower temperature so that LCD readability at lower temperature can be maintained

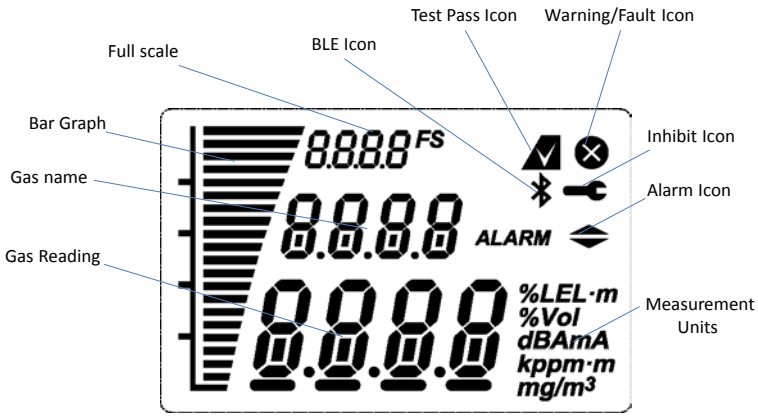

6.2 BLE Communication (Optional)

OELD features an optional BLE interface that allows non-intrusive connection of mobile device to a sensor that supports RS485 communication. The OELD bridges message transactions between mobile device and sensor by converting the BLE packet to RS485 message and repeating it onto RS485 interface, and vice versa. OELD does not interpret any RS485 messages from mobile device and sensor.

The BLE interface is accessed by mobile device that supports Bluetooth Low Energy.

Refer to the OELD Mobile App manual for BLE communication information.

Note: The BLE (Bluetooth Low Energy) is different from Bluetooth Classic. Make sure the mobile device has an operating system that supports BLE.

Note: Bluetooth feature should be enabled in the mobile device to allow it to scan BLE devices nearby.

Refer to the Mobile device user's manual for details of how to use the Bluetooth on the mobile device.

Note: OELD is compatible with the BLE Point-to-Point mode of operation only. If OELD is connected with one mobile device, it won't be scanned by other mobile device

If there is no valid BLE communication for 10 minutes, OELD will terminate BLE connection automatically

Note: BLE communication range will vary depending on the field situation and installation location of OELD. It is recommended to use BLE interface in the line of sight

6.3 Alternative communications (SHC-1)

If the sensor features an RS485 interface (i.e. Honeywell Analytics optical products) this can be accessed using the Honeywell Analytics SHC1 Handheld Interrogator and the SHC Protection Device, by direct connection to the terminals inside the OELD.

Note: OELD does not support XPIS terminal. If XPIS terminal is required, an appropriate junction box should be used instead

WARNING

Do not use BLE communication when the SHC1 Handheld Interrogator is connected to RS485 terminal on the OELD

Refer to the individual sensor manual for details of how to use the SHC1 Handheld Interrogator.

7. OELD Mobile App

7.1 Install mobile App

Mobile App on the mobile device is used to configure OELD and sensor connected to an OELD. The OELD configuration is done as part of sensor configuration by mobile app. The sensor considers an OELD as local display accessory with BLE.

Mobile app runs under Android OS that supports Bluetooth Low Energy. Android OS version should be 4.3 or higher. OELD Mobile App is available in Google App store.

Installation procedure is as below.

1. Search and download Honeywell OELD Mobile App from Google store
2. OELD mobile app will be automatically installed on the mobile device

7.2 Run OELD Mobile App

1. Tap the OELD mobile app icon
2. Upon start-up it will ask a user to agree with EULA (end user license agreement)
3. Confirm the EULA and proceed
4. Log in screen will appear to ask a user to log in the app
5. Create a user account if there is no existing account and you'll get activation email from Honeywell
6. Confirm the account activation email by clicking on the link in the email
7. Activate / register OELD instrument by scanning the QR code in the registration sheet in the packaging box

Note: First time log-in requires internet connection to register a user and to activate OELD device

8. It will download user certificate from the Honeywell server.
9. Scan the BLE device nearby and connect target OELD
10. After successful connection to OELD, a user can configure OELD and sensor connected to the OELD

Note: A user can connect to OELD devices that have been registered to the user account.

For detailed configuration procedure by mobile device, refer to OELD Mobile App user's manual or help of OELD mobile app.

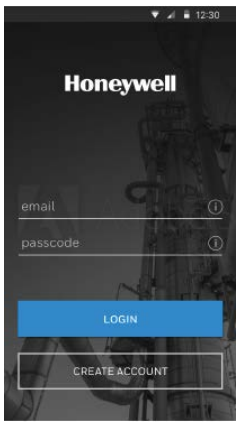

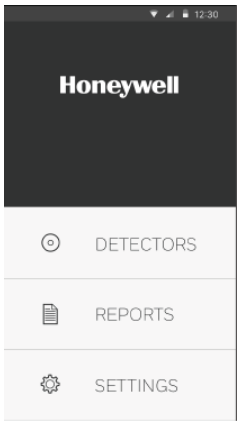

7.3 Configure OELD device

OELD has several configurable parameters, which are set using mobile device only. The configurable parameters are as shown in the table below.

Configuration Parameters	Min Value	Max Value	Step Size
Device type	Generic 4to20mA transmitter, Optima Plus or Searchline Excel		
Alarm Threshold*	10%	100%	1%
Alarm Trigger*	Rising, falling, disabled		
Gas name on display			
Full Scale Range for 20mA			
Display resolution			
Measurement units			
Inhibit Current	0mA	3mA	.05mA
Warning Current	0mA	6mA	.05mA
Beam block current	0mA	6mA	.05mA
Over-range Current	20mA	21.6mA	.05mA
Green LED in normal	Off or on		

*Note

Alarm threshold and trigger is for local indication at OELD. They do not affect the operation of connected sensor and other alarm devices.

7.4 Configure Optima Plus

OELD mobile helps a user to configure Optima Plus connected to OELD. The configurable parameters are as shown in the table below. A user can configure Optima Plus as he/she does with SHC1 handheld device.

Configuration Parameters	Min Value	Max Value	Step Size
Auto Zero	Enabled or Disabled		
Alarm Threshold	10%	100%	1%
Inhibit Current	0mA	3mA	.05mA
Warning Current	0mA	6mA	.05mA
Over-range Current	20mA	21.6mA	.05mA
Protocol Address	0	255	1

Note: Make sure Optima Plus is connected to RS485 terminal on the OELD.

7.5 Calibrate Optima Plus

OELD mobile app allows a user to calibrate the Optima Plus same as SHC1 handheld device.

1. After connecting to OELD device, go to Calibrate menu on the mobile app
2. Click on “Zero” button to start zeroing
3. Mobile app will initiate zero calibration after inhibiting the 4-20mA output of the Optima Plus
4. After successful zeroing, click on “Span” button to perform span calibration
5. Apply calibration gas to the Optima Plus
6. Wait until span calibration is complete

Refer to Optima Plus User’s manual prior to carrying out gas calibration

Caution: Searchpoint Optima Plus is factory calibrated and does not require routine calibration. In most cases, a re-zero will correct any inaccuracy in the gas reading. It is strongly recommended that a span calibration is not carried out

WARNING

As some calibration gases may be hazardous, ensure that outlets from gassing accessories exhaust safely.

WARNING

A compressed air cylinder (20.9%Vol oxygen) should be used to perform the zero calibration if the area where the detector is located contains any residual amount of the target gas.

8. Maintenance

8.1 General

Periodically inspect OELD and cabling for signs of physical damage. Clean the glass window with a damp cloth. Do not use solvents or abrasive cleaners.

OELD has no user serviceable parts. Honeywell Analytics recommend that the unit's configuration and operation are checked annually.

The gas detectors connected to OELD should be checked and if necessary zero and span calibrated by following the procedures detailed in their operating instructions.

8.2 Display Module Replacement

The display module can be replaced, for example in the event of failure of the LCD and backlit.

1. Remove the power from OELD and carefully remove the lid.
2. Lift the handle and take out the internal display module with no strain on the internal cables.
3. Disconnect the all wires from the terminal block at the bottom of display module
4. It is recommended to make a note of the original serial number of display module and mark the serial number inside the enclosure. Retain a record of the original serial number in the maintenance record for the installation (refer to IEC/EN 60079-29-2).
6. Connect the all wires to the terminal block of the replacement display module in accordance with Chapter 4 Electrical Connections.
7. Carefully replace the display module with no strain on the cables.
8. Fully tighten the lid

Caution: Take care to avoid trapping cables when replacing the display module.

Note: The replacement lid will have default settings for the threshold for local alarm indication and mA input level settings, RS485 communication settings, confidence signal of the green light and sensor settings. It may be necessary to re-program the configuration by using mobile device.

9. Faults and Warning

Message	Code	Description	Remedial Action
Over Rang	W-01	Over-range warning	Check the sensor by referring to sensor manual
bEAm Bloc	W-02*	Beam block signal detected	Check the sensor by referring to sensor manual
Curr Warn	W-03	Warning level input from the detector	Check the sensor by referring to sensor manual
Comm Err	F-01	Internal Comm. failure	Reset OELD. If fault still appears, replace the display module
Curr FLt	F-02	Fault level input from the detector	Check the sensor by referring to sensor manual
Curr High	F-03	Input current is too high	Check the sensor by referring to sensor manual
Volt Err	F-04	Supply voltage fault or Internal power supply fault	Reset OELD. If fault still appears, replace the power module
RAM Err	F-05	RAM read/write fault	Reset OELD. If fault still appears, replace the display module
Mem Err	F-06	Info. memory corrupted	Reset OELD. If fault still appears, replace the display module
Code Err	F-07	Code Memory corrupted	Reset OELD. If fault still appears, replace the display module
Cert Err	F-08	Device certificate corrupted	Contact manufacturer

*Note: Warning for beam block is only available when the connected sensor type is Searchline Excel.

10 Specifications

OELD Specification	
Material	Marine-grade aluminium alloy or 316 stainless steel with 5-coat painted finish
Weight	Aluminium version 2.3 kg (5 lb), stainless steel version 5.0 kg (11 lb)
Dimensions	159 x 197 x 114 mm (6 ¼ x 7 ¾ x 4 ½ inch)
Cable entries	5 x M25 (ATEX/IECEx version) or 5 x ¾" NPT (cULus version). One reserved for sensor connection. 3 blanking plugs supplied for unused entries.
Termination	2 x pluggable rising-clamp type for connection to gas detector and field wiring. Accepts cable sizes of 0.5 to 2.5mm^2, 12 to 28 AWG
Storage Temperature	-25 to +65 °C (-13 to 149 °F)
Operational temperature	-40 to +65 °C (-40 to 149 °F) -60 to +65 °C (-76 to 149 °F) with optional heater module$^+$
Humidity	(non-condensing) 20 to 90% RH continuous, 0 to 99% RH intermittent
Display	LCD module showing digital readout of sensor output, bar chart representation, units of measurement, status icons for alarm, maintenance and active Bluetooth connection.
Configurable displayed information	Displayed information fully user-configurable using the OELD mobile app. Units of measurement (select from %LEL, mg/m3, g/m3, %Vol, ppm, mA, A, kppm, LEL.m, dB, dBA, ppm.m) Gas name (up to 4 alpha-numeric characters) Measurement range
Visual indication	Green/amber/red/blue multi-colour backlight to display for indication of detector and OELD status. Green (normal) indication can be disabled via app.
Power supply	18 to 32 Vdc (24 Vdc nominal), <2 W
Interfaces	Bluetooth® (BLE) non-intrusive connection to suitable mobile device running the OELD mobile app. Range up to 10 m (mobile device dependant) Internal RS-485 connection to Searchpoint Optima Plus or Searchline Excel via SHC-1 through the protection device
Environmental Protection	IP66 / Type 4X
Core Approvals	EN 50270: 2015 (EMC) IEC/EN/UL/CSA 61010 (Electrical Safety) FCC$^+$ RoHS China RoHS$^+$
Safety Approvals	ATEX [DEMKO 16 ATEX 1693X] Ex II 2 GD Ex db IIC T6 (flameproof Ex d version) Ex tb IIIC T85°C (flameproof Ex d version) T_{amb} -40 to +65°C cULus [E484838] Class I, Div 1, B, C & D Class II, E, F & G Class III T_{amb} -55 to +65°C IECEx [IECEx UL 16.0066X] Ex db IIC T6 (flameproof Ex d version) Ex tb IIIC T85°C (flameproof Ex d version) T_{amb} -40 to +65°C CU TR-Ex (Russian Customs Union), T_{amb} -60 to +65°C* CCCF* Inmetro* NEPSI$^+$* PESO$^+$* Assessed to have no effect on functional safety of connected gas sensor

Maritime Approvals*	Type approved to DNV, BV+, Lloyds+, ABS EN 60945 (EMC) IEC 60092-504
Other Approvals	BT SIG (Bluetooth), RED, FCC+, country-specific wireless approvals
Bluetooth communication security	Certificate-based mutual authentication. Encryption to AES128.

11. Ordering Information

Part Number	Description
OELDBXXXXXADMAX	OELD Smart Junction Box, Display, Ex d, Aluminum, 5 x M25 Cable Entries, Bluetooth, ATEX/IECEx
OELDBXXXXXSDMAX	OELD Smart Junction Box, Display, Ex d, Painted 316SST, 5 x M25 Cable Entries, Bluetooth, ATEX/IECEx
OELDBXXXXXAEMAX	OELD Smart Junction Box, Display, Ex e, Aluminum, 5 x M25 Cable Entries, Bluetooth, ATEX/IECEx
OELDBXXXXXSEMAX	OELD Smart Junction Box, Display, Ex e, Painted 316SST, 5 x M25 Cable Entries, Bluetooth, ATEX/IECEx
OELDBXXXXXADNUX	OELD Smart Junction Box, Display, C1D1 Z1, Aluminum, 5 x 3/4" Cable Entries, Bluetooth, cULus
OELDBXXXXXSDNUX	OELD Smart Junction Box, Display, C1D1 Z1, Painted 316SST, 5 x 3/4" Cable Entries, Bluetooth, cULus
OELDBXXXXXADMRX	OELD Smart Junction Box, Display, Ex d, Aluminum, 5 x M25 Cable Entries, Bluetooth, CU-TR Ex
OELDBXXXXXSDMRX	OELD Smart Junction Box, Display, Ex d, Painted 316SST, 5 x M25 Cable Entries, Bluetooth, CU-TR Ex

Find out more at www.honeywellanalytics.com

Contact Honeywell Analytics:

Europe, Middle East, Africa, India
Life Safety Distribution AG
Javastrasse 2
8604 Hegnau
Switzerland
Tel: +41 (0)44 943 4300
Fax: +41 (0)44 943 4398
gasdetection@honeywell.com

Customer Service
Tel: +800 333 222 44 (Freephone number)
Tel: +41 44 943 4380 (Alternative number)
Fax: +800 333 222 55
Middle East Tel: +971 4 450 5800 (Fixed Gas Detection)
Middle East Tel: +971 4 450 5852 (Portable Gas Detection)
India Tel: +91 124 4752700

Americas
Honeywell Analytics Inc.
405 Barclay Blvd.
Lincolnshire, IL 60069
USA
Tel: +1 847 955 8200
Toll free: +1 800 538 0363
Fax: +1 847 955 8210
detectgas@honeywell.com
www.honeywell.com

Asia Pacific
Honeywell Analytics Asia Pacific Co., Ltd.
7F SangAm IT Tower
434 Worldcup Buk-ro, Mapo-gu,
Seoul 03922,
South Korea
Tel: +82 (0)2 6909 0300
Fax: +82 (0)2 2025 0388
analytics.ap@honeywell.com

Technical Services
EMEAI: HAexpert@honeywell.comUS
US: ha.us.service@honeywell.com
AP: ha.ap.service@honeywell.com

Please Note:

While every effort has been made to ensure accuracy in this publication, no responsibility can be accepted for errors or omissions. Data may change, as well as legislation and you are strongly advised to obtain copies of the most recently issued regulations, standards and guidelines. This publication is not intended to form the basis of a contract

Issue 3_06/2015

H_MAN0XXX_EMEA

3011M5001 A0XXXX

© 2016 Honeywell Analytics