Honeywell
THE POWER OF CONNECTED

Sensepoint XRL

Fixed Gas Detector

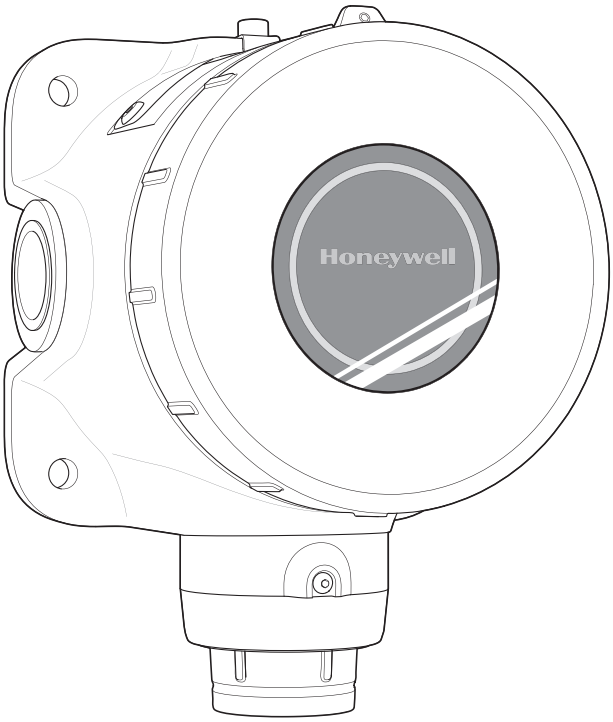

Installation Manual

About This Manual

This manual describes how to install and use the Sensepoint XRL gas detector and should be read by anyone who installs, operates, or maintains these products.

Read and understand this manual in full before you install the product. While every effort has been made to ensure the accuracy of this document, Honeywell can assume no responsibility for any errors or omissions or their consequences. Honeywell would greatly appreciate being informed of any errors or omissions that may be found in the content of this document. For information not covered in this document, or to send comments or corrections, please contact Honeywell using the contact details given on the back page.

Honeywell reserves the right to change or revise the information supplied in this document without notice and without obligation to notify any person or organization of such revision or change.

Contents

About This Manual 2

Contents 3

1 Introduction 5

1.1 Features 5
1.2 Appearance 6
1.3 Accessories 6
1.4 Detectable Gases 7
1.5 Detector Versions 7
Analog (mA) Output Versions 7
Modbus Output Versions 8
1.6 Specifications 8
Dimensions and Weight 8
Power Supply 9
Outputs 9
Maximum Power Consumption 9
Operating Environment 10
Recommended Wall-Mounting Screws 10
Cable Gland 10
Gas 10

2 Installation 11

2.1 Safety Information 11
2.2 Installation Layout 14
2.3 Power Cable Specification 14
2.4 Main Electronics Module 16
2.5 Wiring of mA Output Versions 16
Power Connection 16
Inhibit Level Selection 17
Current Source/Sink Selection 17
2.6 Wiring of Modbus Output Versions 20
Modbus Connection 20

Cable Specification for Modbus Connection 20
Terminal Resistor 20
2.7 Securing the Detector to a Wall 21
2.8 Cable Connections 21
2.9 Ground Connections 23
2.10 Finalizing Installation 24

3 Commissioning 26

4 Maintenance 28
4.1 Using the Control Buttons 28
4.2 Maintenance Status Indicator 29
4.3 Calibration Cap 30
4.4 Calibration 32
4.5 Bump Test 33
4.6 Replacing the Sensor 34
4.7 Resetting Alarms and Faults 37

5 Mobile App 38

Appendix

A Detector Parameters 39

B Troubleshooting 42
B.1 Warning 42
B.2 Fault 42

C Ordering Information 43
C.1 Detectors 43
C.2 Accessories 44
C.3 Consumables 45
C.4 Spares 45

D Warranty 46

E Safety Information for Wireless Devices 47
E.1 FCC Compliance 47
E.2 RED Compliance 48

F Certification 49

G Contact Information 51

Chapter 1
Introduction

1.1 Features

Sensepoint XRL is a single-sensor fixed gas detector, which supports the following interfaces dependent on the model:

Analog output: Sensepoint XRL features current loop output, supporting signals in the range 0 to 22 mA. Typically this interface is referred to as 4 to 20 mA.

Digital output: Sensepoint XRL supports Modbus RTU digital communications.

Mobile app: A mobile app is available to commission and maintain the Sensepoint XRL gas detector.

1.2 Appearance

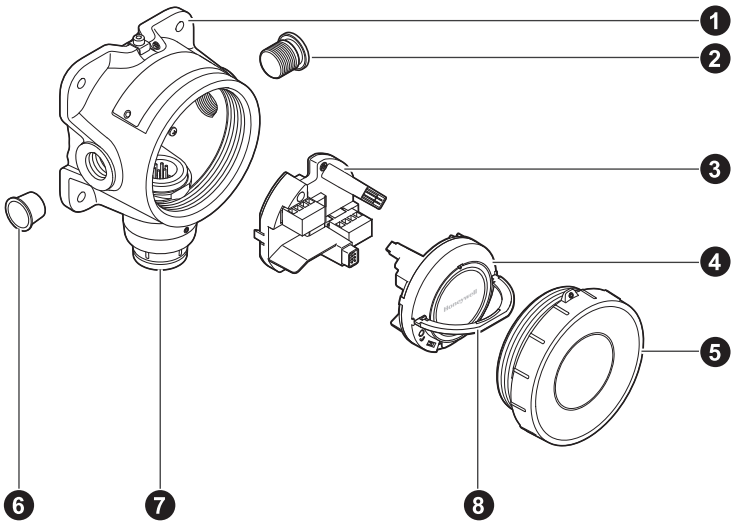

1) Housing	2) Blanking plug
3) Connector module	4) Main electronics module
5) Front cover	6) Thread protector
7) Sensor cap	8) Handle

1.3 Accessories

Part number	Description
SPXRLCAL	Sensepoint XRL Calibration Cap
SPXRLFLW	Sensepoint XRL Flow Housing
SPXRLDMK	Sensepoint XRL Duct Mount Kit
2308B0923	Pole Mount Bracket Kit

1.4 Detectable Gases

Sensepoint XRL is available for the detection of the following gases:

- Oxygen (O_2)
- Toxic gases
  - Carbon monoxide (CO)
  - Hydrogen (H_2)
  - Hydrogen sulfide (H_2S)
  - Nitrogen dioxide (NO_2)
- Combustible gases
  - Methane (CH_4)

For additional combustible gas availability, contact Honeywell Analytics.

1.5 Detector Versions

The 4-way terminal block(s) provide connection for both the gas detector output and the power supply. Assignment of the terminals and additional terminal blocks will vary dependent on the version.

Analog (mA) Output Versions

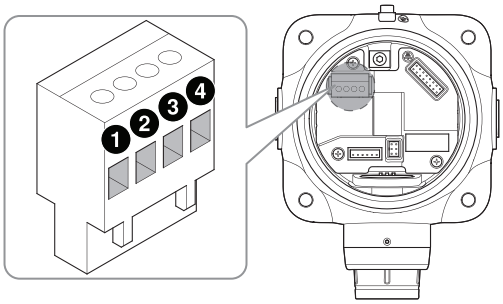

1) +24 V DC or 24 V AC	2) 0 V or 24 V AC
3) 4 to 20 mA	4) Common

For details on wiring for the analog output version, see **Wiring of mA Output Versions** on page 16 and also **Current Source/Sink Selection** on page 17.

Modbus Output Versions

NOTE

Use of the mobile app is required to change the configuration settings of the Modbus RTU interface.

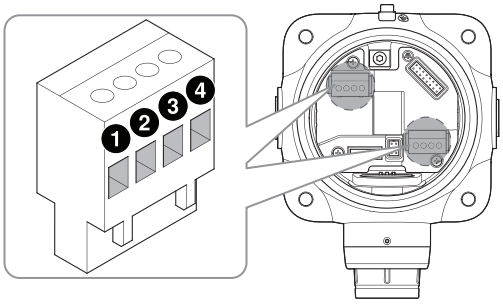

1) +24 V DC or 24 V AC	2) 0 V or 24 V AC
3) A	4) B

1.6 Specifications

Dimensions and Weight

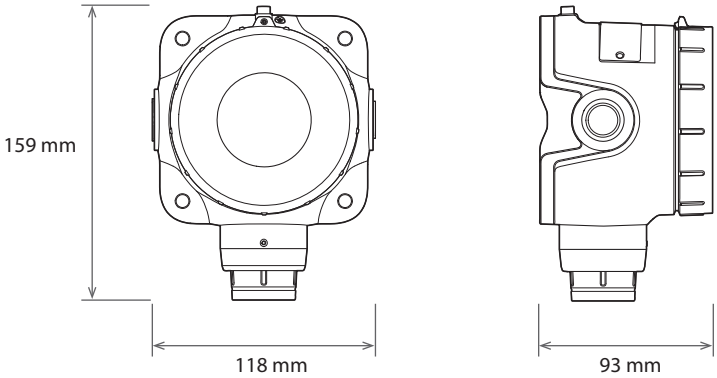

Length	118 mm (4.4 in)
Height	159 mm (6.2in)
Depth	93 mm (3.6 in)
Weight	1400 g (3.1 lb)

Power Supply

Sensepoint XRL requires an isolated power supply unit that is certified by a national or international standard, such as UL.

Nominal DC input voltage	24 V DC[†]
Nominal AC input voltage	24 V AC[‡], 50/60 Hz
Inrush current	Less than 850 mA

[†]mA versions: 11 to 32 V DC, Modbus versions: 9 to 32 V DC
[‡]20 to 27 V AC

Outputs

Analog output	0 to 22 mA sink or source (configurable)
Digital output	Modbus RTU

Modbus RTU Default Communication Setting

Baud rate	9600
Parity	None
Data bits	8
Stop bits	2
Flow control	None

Maximum Power Consumption

The power consumption varies, depending on output version and sensor type.

Analog Output Version

	In normal state	During an alarm
Electrochemical-cell-type sensors	0.8 W	1.5 W
Catalytic-type sensors	1.9 W	2.6 W
Infrared-type sensors	1.3 W	2.0 W

Digital Output Version

	In normal state	During an alarm
Electrochemical-cell-type sensors	0.5 W	1.0 W
Catalytic-type sensors	1.6 W	2.0 W
Infrared-type sensors	1.0 W	1.5 W

Operating Environment

Operating temperature	-40 to 65 °C (-40 to 140 °F)
Storage temperature	0 to 30 °C (32 to 86 °F)
Humidity	0 to 99% (non-condensing)†
Atmospheric pressure	90 to 110 kPa
Installation category	II (UL/CSA/IEC/EN 61010-1)
Pollution degree	2 (UL/CSA/IEC/EN 61010-1)

†Flammable catalytic versions: 10 to 90% RH. Operating the detector outside of this range may result in increased drift and a reduction in detector accuracy.

Recommended Wall-Mounting Screws

Type	Countersunk, pan head
Size	6 mm (No. 14) diameter × 38 mm (1.5 in) min.

Cable Gland

ATEX/IECEx	M20
cULus	¾ NPT

Gas

See **Detector Parameters** on page 39 for a full list of detectable gases, ranges and other information.

Chapter 2
Installation

2.1 Safety Information

⚠ CAUTION

FOR SAFETY REASONS THIS EQUIPMENT MUST BE OPERATED AND SERVICED BY QUALIFIED PERSONNEL ONLY. READ AND UNDERSTAND INSTRUCTION MANUAL COMPLETELY BEFORE OPERATING OR SERVICING.

⚠ CAUTION

HIGH OFF-SCALE READING MAY INDICATE EXPLOSIVE CONCENTRATION.

Observe these precautions:

- To minimize the risk of electrostatic charge, provision shall be made for adequate grounding and equipment shall be installed in such a manner so that accidental discharge shall not occur.
- When Sensepoint XRL reaches the end of its life, it should be disposed of in accordance with local regulations.
- Do not use cleaning solvents or abrasives to clean the gas detector.
- Do not attempt to modify the product in any way from the manufacturers design or specification. Warranty will be void and malfunction of the gas detector may result.
- Use only genuine spare parts and accessories with Sensepoint XRL. Malfunction may result if non-standard parts are used.

⚠ WARNING

- Sensepoint XRL is designed for installation and use in Zone 1 or 2 hazardous areas in many countries including Europe and for Class 1 Division 1 or 2 area applications in North America.
- Installation must be in accordance with the recognized standards of the appropriate authority in the country concerned.
- Access to the interior of the detector, when carrying out any work, must only be conducted by trained personnel.
- Before carrying out any work ensure local regulations and site procedures are followed. Appropriate standards must be followed to maintain the overall certification of the detector.
- For installations where conduit is used, and the sensor is mounted directly to the Sensepoint XRL, there must be a “Seal Fitting” installed for each of the cable gland entries within 18 inches of the Sensepoint XRL. The total distance of the location of these Seal Fittings is 18 inches. (e.g. If both gland entries are to be used, 2 Seal Fittings should be located, each within 6 inches of the wiring entrance).
- In order to maintain electrical safety, the product must not be operated in atmospheres with more than 21% oxygen. Oxygen deficient atmospheres (Combustible: less than 10%V/V, Toxic: less than 6%V/V) may suppress the sensor output.
- If using an anti-seize compound, the threads should be thinly coated with an approved silicone free compound e.g. petroleum jelly
- To reduce the risk of ignition of hazardous atmosphere, de-classify the area or disconnect the equipment from the supply circuit before opening the detector enclosure. Keep assembly tightly closed during operation.
- Never attempt to open a junction box/enclosure or replace/refit the sensor in potentially hazardous atmospheres while power is still applied to the transmitter.
- The detector must be earthed/grounded for electrical safety and to limit the effects of radio frequency interference. Earth/ground points are provided inside and outside the unit. The internal grounding shall be used as the primary equipment ground. The external terminal is only a supplemental bonding connection where local authorities permit or require such a connection.
- Ensure that all screens/instrument earth/clean earth wiring is earthed/grounded at a single point (either at the controller or detector, BUT NOT BOTH) to prevent false readings or alarms that may occur due to potential earth/ground loops.

- Take care when handling sensors as they may contain corrosive solutions. Do not tamper with or in any way disassemble the sensor.
- Do not expose to temperatures outside the recommended ranges.
- Do not expose sensors under storage conditions to organic solvents or flammable liquids.
- At the end of their working life, replacement electrochemical sensors for oxygen and toxic gas must be disposed of in an environmentally safe manner. Disposal should be according to local waste management requirements and environmental legislation.
- Alternatively, old replaceable sensors may be securely packaged and returned to Honeywell Analytics clearly marked for environmental disposal.
- Electrochemical sensors should NOT be incinerated as this action may cause the cell to emit toxic fumes.
- Refer to the local or national regulations relative to the installation at the site. For Europe see EN60079-29-2, EN60079-14, EN45544-4 and EN61241-14.
- This equipment is designed and constructed as to prevent ignition sources arising, even in the event of frequent disturbances or equipment operating faults.
- Only the combustible gas detection portion of this instrument has been assessed for performance in CSA C22.2 No. 152.
- The pellistors used in the catalytic flammable gas sensor can suffer from a loss of sensitivity when in the presence of poisons or inhibitors, e.g. silicones, sulphides, chlorine, lead, or halogenated hydrocarbons.

Installation must be in accordance with the recognized standards of the appropriate authority in the country concerned. For Europe, see EN60079-14, EN60079-29-2, and EN61241-14. For installations in North America, the National Electrical Code (NFPA 70) should be strictly observed. All the appropriate local and national regulations should be observed.

2.2 Installation Layout

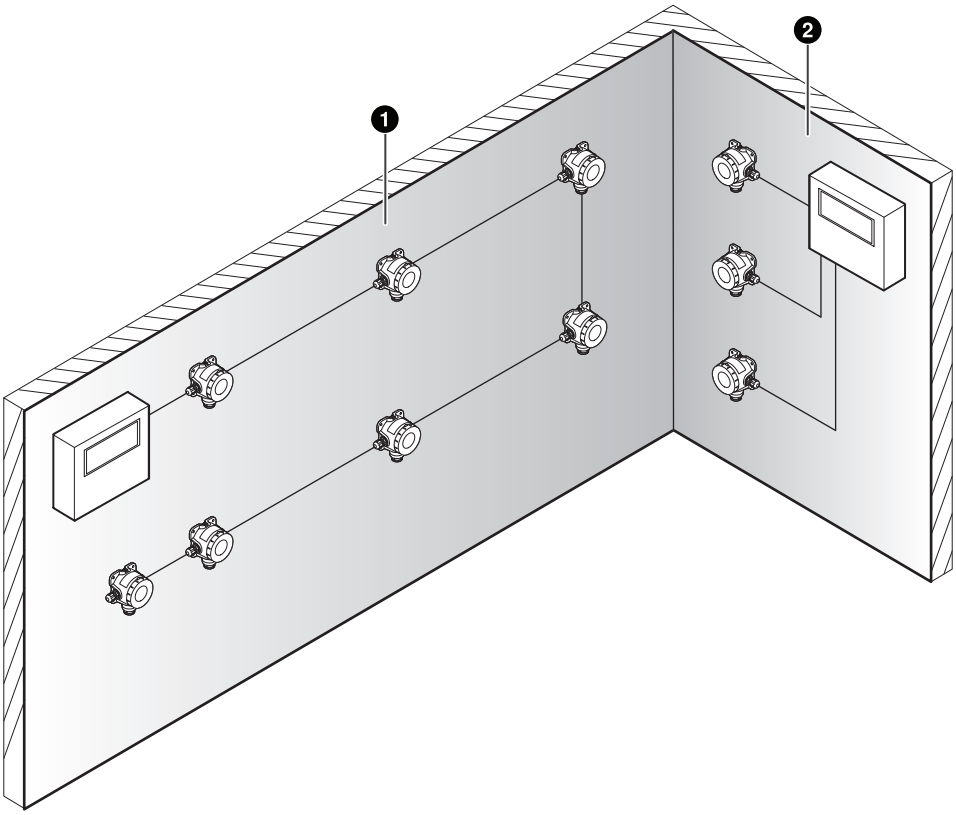

1) A gas detection system using Modbus RTU. Detectors are wired on a single cable run.
2) A gas detector system using analog current loop principle. Each detector is individually wired to the controller on its own cable.

Final positioning of gas detectors should be indicated by the characteristics of the gas being detected and other environmental factors. Seek advice from experts where necessary.

⚠ CAUTION

Sensepoint XRL shall be installed on the flat surface or integral mounting plate consisting of four mounting holes on the transmitter body. Installation shall ensure the top case of Sensepoint XRL to be seen in front.

2.3 Power Cable Specification

Sensepoint XRL requires a power supply from the controller of specified supply voltage range in Section 1.6. Ensure that a minimum supply

voltage is measured at the Sensepoint XRL, taking into account voltage drops due to cable resistance.

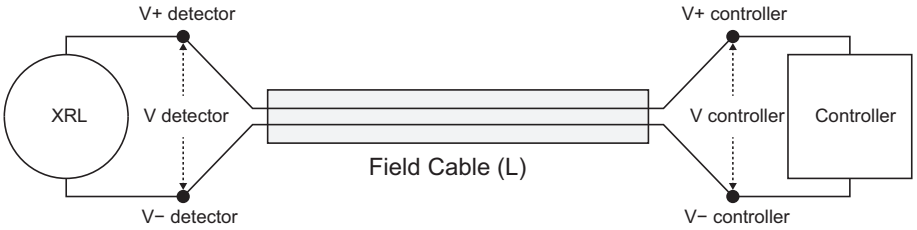

The maximum loop resistance ($R_{loop\ max}$) in the field cable is calculated as follows:

$$R_{loop\ max} = (V_{controller} - V_{detector\ min}) \div I_{detector\ max}$$

$$I_{detector\ max} = W_{detector\ max} \div V_{detector\ min}$$

Example

The controller is supplying a nominal 24 V DC ($V_{controller}$), and the minimum allowable voltage of XRL is 11 V DC ($V_{detector\ min}$). Therefore the maximum allowable voltage drop across the cable between the controller and detector is $V_{controller} - V_{detector\ min}$ = 13 V DC. Power consumption of the detector is maximum 2.6 W ($W_{detector\ max}$). The maximum current required to drive the XRL at the minimum voltage is 2.6 W ÷ 11 V DC = 236.4 mA ($I_{detector\ max}$). So the maximum field cable loop resistance ($R_{loop\ max}$) is 13 V DC ÷ 0.2364 = 55 Ω. Therefore, the maximum cable length for any given cable type can be found by dividing the maximum allowable cable resistance per core by the cable resistance provided by the cable manufacturer.

The following table shows the typical maximum cable distances for our example.

Cable size (cross sectional areal)	Typical cable resistance	Maximum cable length (L)
0.5 mm^2 (20 AWG†)	36.8 Ω/km	747 m
1.0 mm^2 (17 AWG†)	19.5 Ω/km	1410 m
1.5 mm^2 (16 AWG†)	12.7 Ω/km	2165 m
2.0 mm^2 (14 AWG†)	10.1 Ω/km	2722 m
2.5 mm^2 (13 AWG†)	8.0 Ω/km	3437 m

†nearest equivalent

2.4 Main Electronics Module

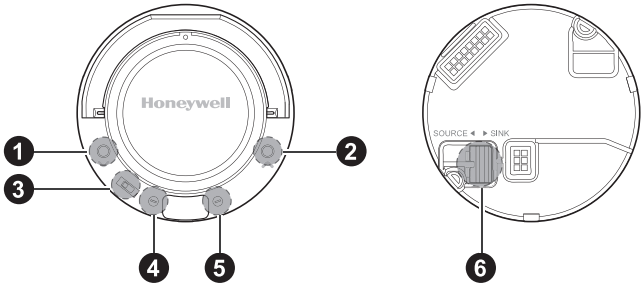

1) DOWN button
2) UP button
3) Inhibit level switch
4) Positive voltage output
5) Negative voltage output
6) Current sink/source selection switch

2.5 Wiring of mA Output Versions

Power Connection

When connecting to DC power, make sure that the polarity is correct.

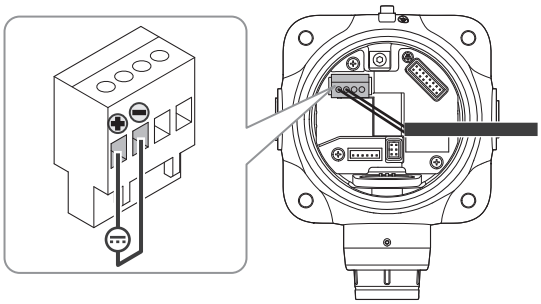

If AC power is used, ensure that terminal 4 “Common” is used to connect the power and controller grounds together.

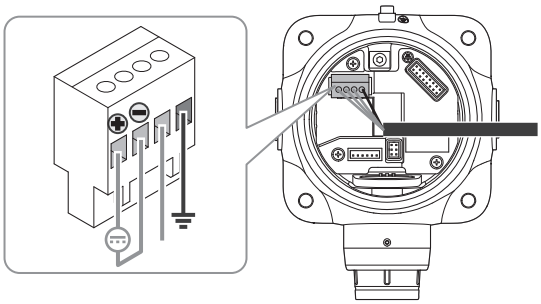

Refer to the circuit diagrams on page 18 and 19.

Inhibit Level Selection

Use the inhibit level switch to set the level of current which is required when inhibit is active.

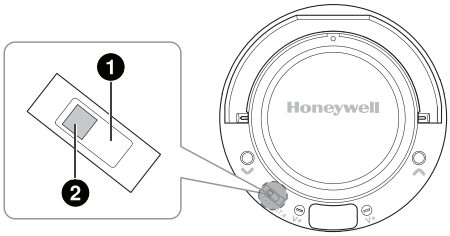

1) With this switch in the lower position, a current of 4 mA is output in inhibit mode. In the case of oxygen versions only, 17.4 mA is used.
2) With this switch in the upper position, a current of 2 mA is output in inhibit mode on all versions.

Current Source/Sink Selection

Use the current source/sink switch to choose between source mode and sink mode.

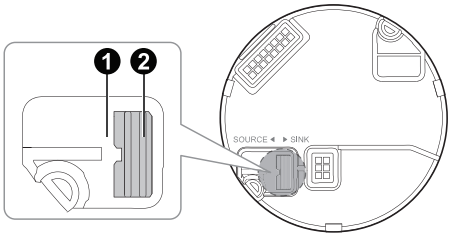

1) Detector source mode: With this switch in the outer position, the analog output draws current through the controller sensing circuit.
2) Detector sink mode: With this switch in the inner position, the analog output drives current through the controller sensing circuit.

NOTE

The load resistance of the controller must be between 33 Ω and 250 Ω. When the mA output is not being used, a 33 Ω, 0.125 W load resistor should be connected between terminal 3 (4–20 mA) and terminal 2 (0 V) for source mode or terminal 1 (+24 V DC) for sink mode. Failure to do so will cause the unit to enter a fault condition.

Detector Source Mode with DC Power

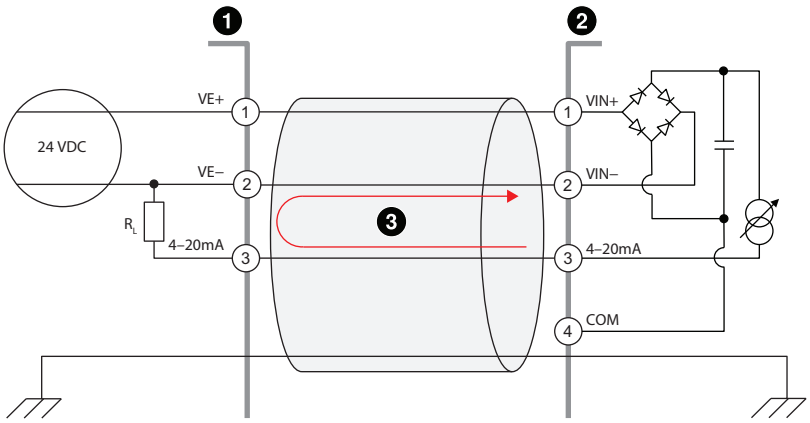

1) System controller
2) Sensepoint XRL detector
3) Current flow

Detector Sink Mode with DC Power

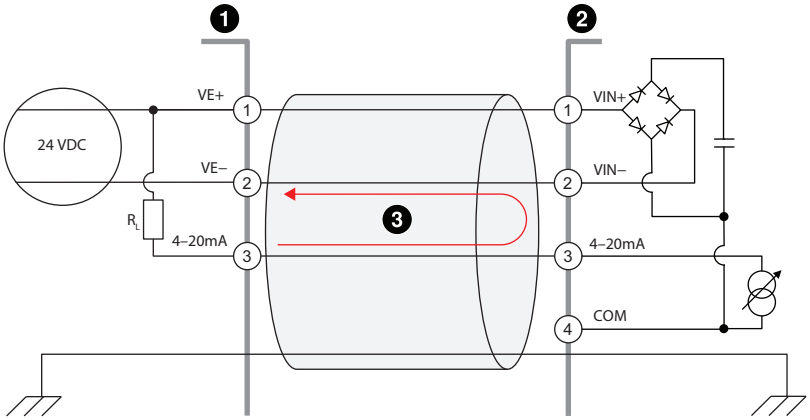

1) System controller
2) Sensepoint XRL detector
3) Current flow

Detector Source Mode with AC Power

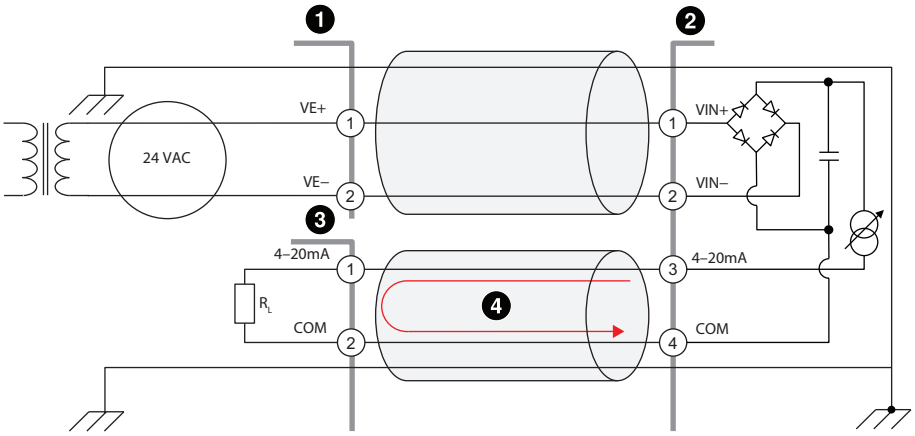

1) External power supply	2) Sensepoint XRL detector
3) System controller	4) Current flow

Detector Sink Mode with AC Power

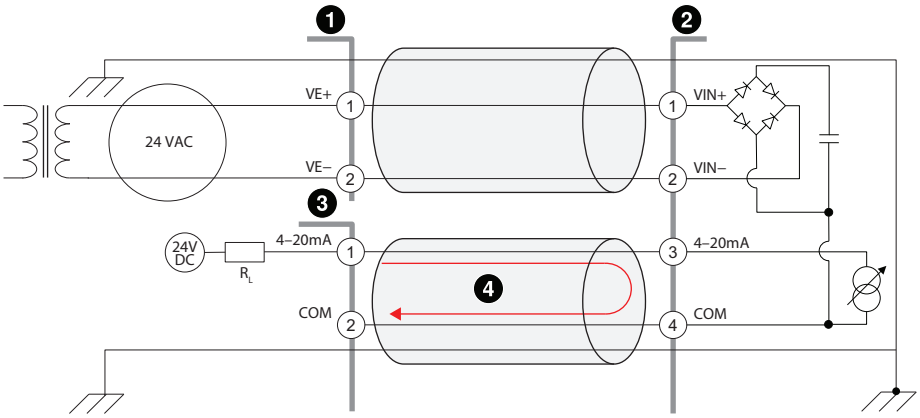

1) External power supply	2) Sensepoint XRL detector
3) System controller	4) Current flow

2.6 Wiring of Modbus Output Versions

Modbus Connection

For Modbus versions, up to 32 Sensepoint XRL detectors can be connected in serial as shown in the diagram below.

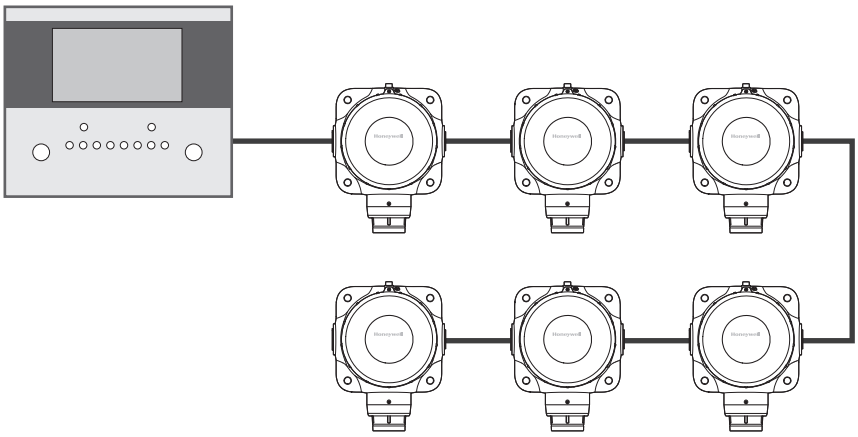

Cable Specification for Modbus Connection

Type	Cable Spec	Max Length
Modbus	0.5 mm^2 to 2.5 mm^2 twist pair shield cable	1000 m

Terminal Resistor

Attach a 120 Ω, 0.25 W terminal resistor between the A and B terminals at the end of the line.

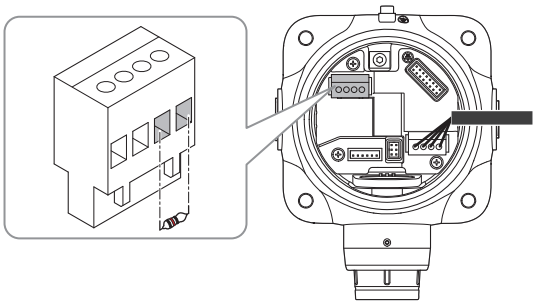

2.7 Securing the Detector to a Wall

⚠ CAUTION

Before starting installation, make sure that the system controller or external power source is switched off.

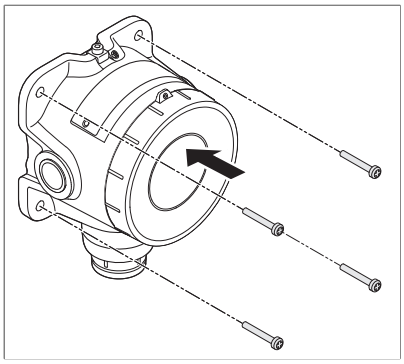

1. Determine where the detector is to be placed using the drill template.
2. Secure the detector in its mounting position with suitable fixings appropriate to the mounting surface. Do not over-tighten.

2.8 Cable Connections

The cable used must be appropriate for the hazardous area classification and meet local, national and/or company regulations. The use of industrial grade, screened field cable is recommended. Make sure that cable has a suitable insulation as cable can be connected to metal parts of Sensepoint XRL enclosure inside.

An example would be 4-core copper cable with screen (minimum 90% coverage) and suitable mechanical protection (e.g. steel wire armor) to suit an M20 or 3/4″ NPT gland entry or conduit.

The allowable conductor size for the terminals is 0.2–2.5 mm^2 (24–12 AWG). The Sensepoint XRL terminals will accept only wire sizes (solid-core or stranded) in this range. The temperature rating of the conductors should be greater than 80 °C. The terminals should be torqued between 0.5 N·m to 0.6 N·m.

Ensure the cable gland is installed correctly and fully tightened. All unused cable/conduit entries must be sealed with a suitable certified blanking plug.

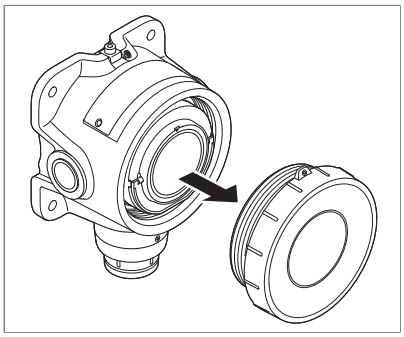

1. Unscrew the front cover counterclockwise until it is open.

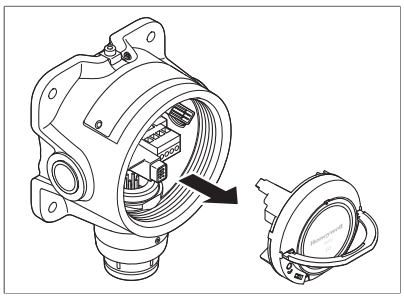

2. Hold the handle of the main electronics module and pull it outward with a steady force. Do not pull sharply.

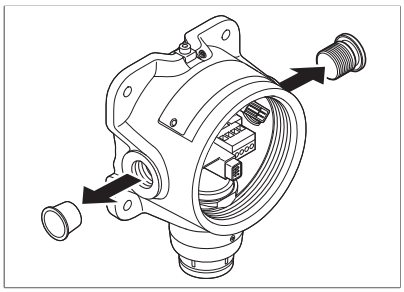

3. Pull out the thread protector from the left cable entry, and remove the blanking plug from the right by turning it counterclockwise. Fit the blanking plug into an unused cable entry later on.

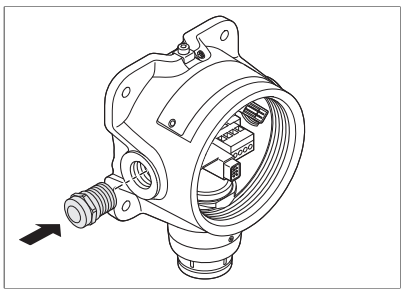

4. Fit suitable cable glands or conduit appropriate to the application and type of cable being utilized to the opened cable entry.

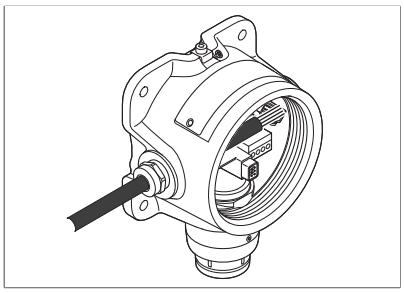

5. Feed the cable through the cable gland.

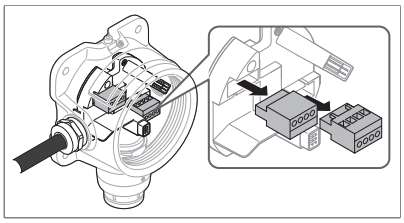

6. Pull the terminal blocks to remove them from the connector module.

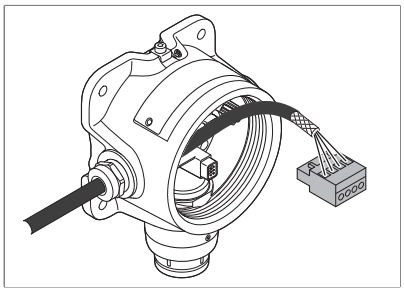

7. Connect the cable to the appropriate terminal block, referring to the relevant wiring diagram. Strip and insert the end of each wire into the corresponding terminal hole. Using a flat-blade terminal screwdriver, tighten the terminal screw until the wire is secured. Use a ferrule on the wire where necessary.

⚠ CAUTION

Do not over-tighten the terminal screw.

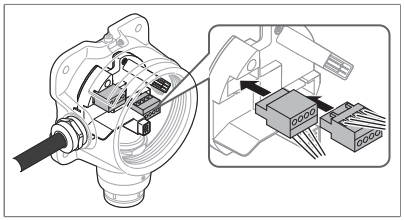

8. Replace the terminal blocks in their correct positions.

2.9 Ground Connections

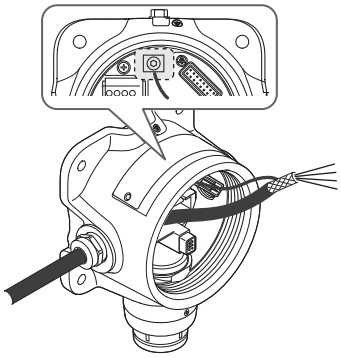

Effective grounding is crucial to ensure stable Modbus communications and to limit the effects of radio frequency interference. A ground point is provided inside the housing. In order to prevent false readings or alarms as a result of ground loops, ensure that the shield of all cables are grounded at a single point, preferably at the controller. Consideration should also be given to how conduit, glands and the internal earth plate are also grounded.

NOTE

A connection for safety earth is provided at the top of the outside of the enclosure. This must be used to connect the enclosure to electrical safety earth. Any earth regime must avoid earth loops.

Internal Ground connection

Utilize the shield of the wiring cable recommended in the wiring instructions. For connection to this terminal, twist the shield wire to avoid stray shield wires. Loosen the screw sufficiently and wrap the wire around the screw in a “U” shape. Raise the clamp and place the wire between the clamp and ground base, lower the clamp and tighten the screw to 6.9 lb-in torque (0.78 N·m).

External Ground Connection

If required by local authority, Use a No 14 AWG copper (stranded or solid-core) wire to make a connection to this point. Loosen the screw sufficiently to enable wrapping the wire around the screw in a “U” shape. Raise the clamp and place the wire between the clamp and ground base, lower the clamp and tighten the screw to 10.4 lb-in torque (1.17 N·m).

2.10 Finalizing Installation

⚠ CAUTION

When installing multiple Sensepoint XRL detectors simultaneously, make sure that every main electronics module is placed back in its original unit. If misplaced in any other unit, the detector does not operate properly.

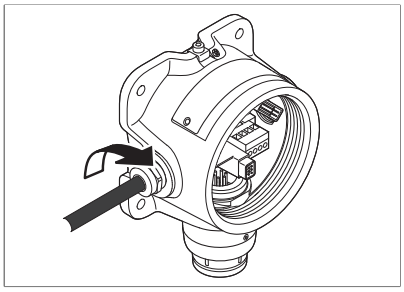

1. Where used, tighten the sealing nut of the cable gland to secure the cable.

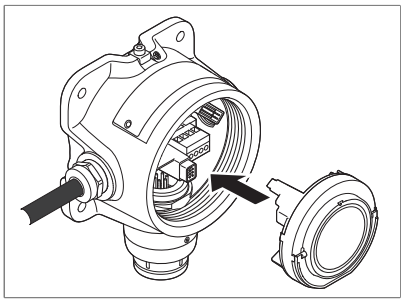

2. Fit the main electronics module to the connector module.

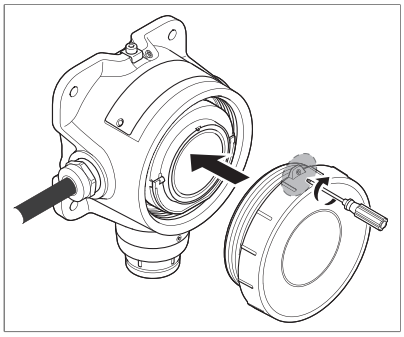

3. Replace the front cover by turning it clockwise ensuring that it is tight.
4. Lock the front cover in position by tightening the grub screw.

Chapter 3

Commissioning

NOTE

The Sensepoint XRL gas detector is supplied from the factory pre-calibrated. However, it is strongly recommended that the detector response is checked and if necessary, re-calibrated before placing it into service. Refer to Calibration on page 32 for details on the correct calibration procedure.

There is a status indicator on the face of the gas detector. The operating state of the detector is indicated by one of four colors, either steady or flashing.

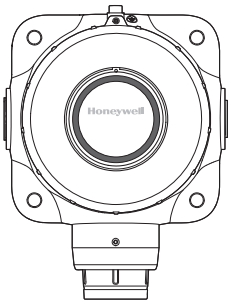

Normal: The indicator flashes green every 20 seconds when the concentration of the target gas is within normal range.

NOTE

Using the mobile Sensepoint app, you can change how the green indicator behaves during normal operation. Select between confidence flash (default setting), steady green or off.

Warning: The indicator alternatively flashes green and yellow when the gas detector is in a warning state.

Fault: The indicator flashes yellow when the gas detector is in a fault state.

- **Inhibited**: The indicator is on steady yellow when the user has placed the detector into the inhibit state for maintenance or repair.
- **Alarm**: The indicator flashes red when the gas concentration is beyond the alarm-level threshold.
- **Out-of-range alarm**: The indicator rapidly flashes red when the gas concentration is beyond the full scale deflection of the detector.
- **Bluetooth pairing**: The indicator flashes blue when Bluetooth pairing between the gas detector and an Android device is in progress.
- **Bluetooth connected**: The indicator is on steady blue when a Bluetooth connection is established and the detector is in a normal condition.

Chapter 4

Maintenance

⚠ WARNING

When it is required to open the front cover of the Sensepoint XRL for any reason or purpose, make sure there is no doubt that the Sensepoint XRL is in fresh air. If there is any doubt of the quality of the atmosphere, ensure to remove power to the Sensepoint XRL before opening the front cover.

4.1 Using the Control Buttons

It is possible to perform basic maintenance functions on the Sensepoint XRL gas detector without the use of the mobile app. This is achieved through the use of two buttons on the face of the detector. Familiarize yourself fully on the operation of these buttons before attempting to use them.

NOTE

Make sure that the inhibit level is set to the desired level. See Inhibit Level Selection on page 17.

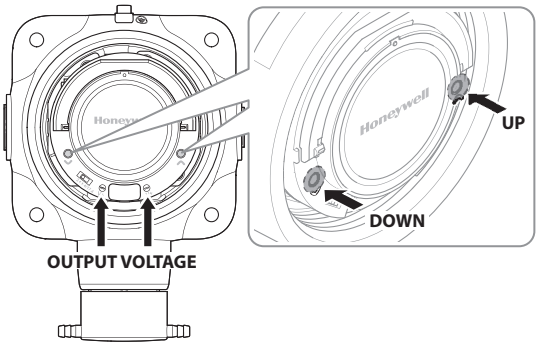

To inhibit the detector output: Press and hold the UP button for 2

seconds.

To increase the output voltage: Briefly press the UP button. Pressing once increases by 0.02 V.

To decrease the output voltage: Briefly press the DOWN button. Pressing once decreases by 0.02 V.

To move to the next stage: Press and hold the UP button for 2 seconds. If a change has been made, it is saved automatically before proceeding to the next stage.

To escape and discard all changes: This escape function can be used at any time during the procedures detailed in the following sections. Press and hold the DOWN button for 5 seconds.

4.2 Maintenance Status Indicator

When performing maintenance, such as calibration or sensor replacement, using the control buttons, refer to the status indicator to determine the status of the detector.

Inhibit mode

While in inhibit mode, the indicator is on steady yellow .

Sensor replacement mode

While in sensor replacement mode, the indicator slowly flashes yellow . When in warm-up, the indicator is on steady yellow .

Zero calibration

During zero calibration, the indicator flashes long yellow followed by two short yellow flashes . First short yellow flash indicates zero status and second flash indicates span status . The indicator flashes long yellow followed by short green flash and short yellow flash when the zero calibration is successfully completed, but flashes long yellow followed by short red flash and short yellow flash if it fails.

Span calibration

During span calibration, the indicator flashes yellow . The indicator flashes green with two short pauses when the span calibration is

successfully completed, but flashes red with two short pauses if it fails.

Calibration gas purge

While the calibration gas is purged, the indicator is on steady yellow .

Cancel

When a task is cancelled, the indicator flashes yellow with three short pauses.

4.3 Calibration Cap

The following table shows the recommended flow rate and stabilization time for each of the gas types.

Gas Type	Recommended Flow Rate	Recommended Stabilization Time
O_2	500 ml/min	5 min
CH_4	500 ml/min	5 min
CO	500 ml/min	5 min
H_2S	500 ml/min	5 min
H_2	500 ml/min	6 min
NO_2	500 ml/min	10 min

NOTE

Always use a flow regulator, tubing and fittings appropriate for the type of gas being applied.

A calibration cap accessory is available for the application of reference gas for the purpose of calibration. To fit the calibration cap, follow the steps below.

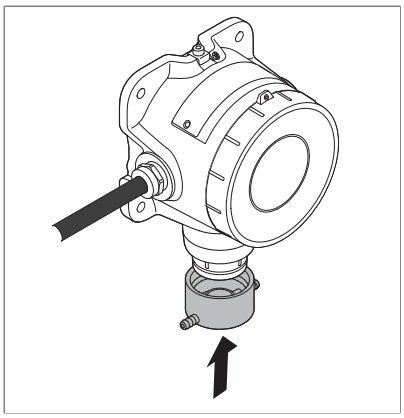

1. Put the calibration cap on the sensor cap.

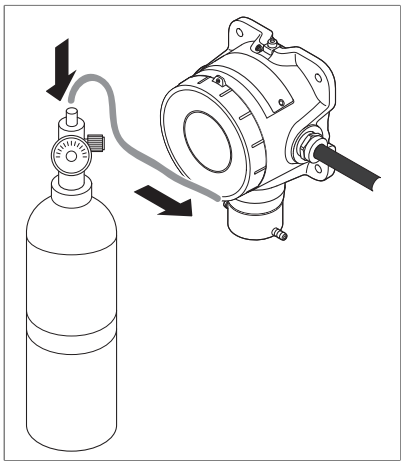

2. Connect a tube from a cylinder of calibration gas to either of the calibration cap's gassing ports.

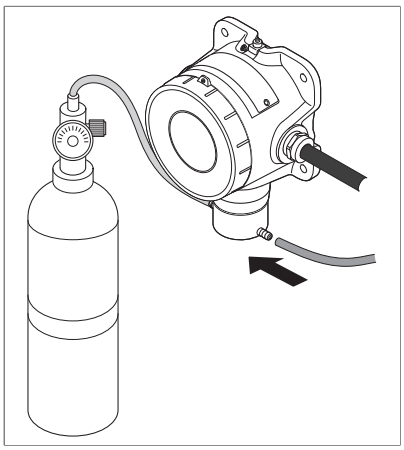

3. Connect another tube to the other gassing port, and place the end of this tube in a position so that gas can exhaust safely away from the work area and other personnel.

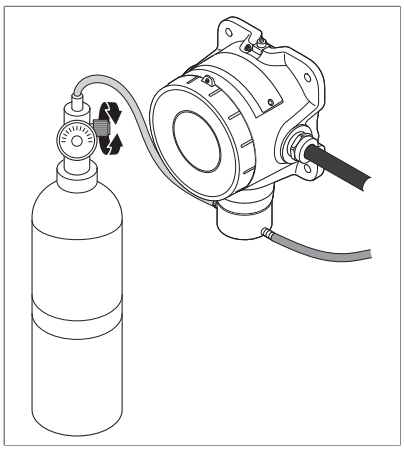

4. Refer to the regulator manufacturer for instructions on how to start and stop the gas flow from the cylinder.

⚠ CAUTION

Always use a gas cylinder that is within its expiration date.

4.4 Calibration

NOTE

On versions that feature the Bluetooth® link, it is preferential to use a smartphone running the app to perform maintenance tasks.

This section describes how to perform a calibration using the control buttons. Before starting calibration, make sure that the gas detector is powered on.

1. Activate inhibit mode by pressing and holding the UP button for 2 seconds. Make sure that the yellow indicator is on.
2. Connect the positive probe of a voltmeter to the positive terminal, and connect the negative probe to the negative terminal of the output voltage monitor.

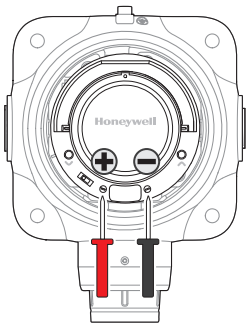

3. Move to the next stage perform a zero calibration.
   a) Move to the next step by holding the UP button for 2 seconds.
   b) If there is any doubt of the quality of the atmosphere, connect a cylinder of fresh air to the detector using the installed tube or the calibration cap. For details about how to use a calibration cap, see **Calibration Cap** on page 30.
   c) Apply fresh air to the detector, and wait for a few minutes until the reading is stable.
   d) Using the UP and DOWN buttons, adjust the output voltage so that the voltmeter is reading slightly above zero, and then decrease the reading slowly so that it reads zero.
4. If a span calibration is required, after successful zero calibration it will move to span calibration automatically. If a span calibration is not required, exit from calibration by holding DOWN button for 5 seconds. This will cancel a span calibration while zero calibration result is stored.

a) Move to the next step by holding the UP button for 2 seconds.
b) Connect a cylinder of span gas to the detector. Where the greatest accuracy is required, the cylinder concentration should be usually around the alarm set point or 50% of the range of the detector.
c) Apply the span gas to the detector, and wait for a few minutes until the reading is stable.
d) Using the UP and DOWN buttons, adjust the output voltage until it reaches the target value. Use the formula below to calculate what the correct voltage should be.

V_{out} = Gas concentration ÷ detector range

For example, if you are applying 45% LEL gas with a 100% LEL detector range, you would need to adjust the voltage output so that the reading on the voltmeter shows:

45 ÷ 100 = 0.45 V

5. Purge the gas sensor.

a) Move to the next step by holding the UP button for 2 seconds.
b) Remove the span gas from the detector.
c) Make sure that the reading voltage out returns to zero. If there is any doubt that the detector is not in fresh air, apply cylinder air. Otherwise, an alarm may occur.

6. Use the cancel function to return to normal monitoring mode.

If repeated calibration attempts continue to fail, replace the gas sensor with a new one, and then try again. See **Replacing the Sensor** on page 34.

4.5 Bump Test

This section describes how to perform a bump test. For details about the mobile app, see **Mobile App** on page 38.

Bump testing is the process of exposing the gas sensor to a known concentration of reference gas that is greater than the low alarm threshold in order to verify the proper operation of the gas detector.

1. Connect your smartphone with the target gas detector via Bluetooth.

2. Place the detector in inhibit mode by using the inhibit control on the mobile app.
3. Connect a cylinder of reference gas to the target detector using a suitable tube connected to the gassing port or the calibration cap. For details about how to use a calibration cap, see Calibration Cap on page 30.
4. Connect your smartphone with the target detector via Bluetooth.
5. Apply the bump test gas to the detector.

   NOTE

   For CO versions operating in UL 2075 alarm mode, apply 100 ppm of carbon monoxide at a flow rate of 500 ml/min for 5 minutes.

6. If the detector fails the bump test, check and if necessary, calibrate the detector.

NOTE

Perform a bump test at least twice a year.

4.6 Replacing the Sensor

⚠ WARNING

Use only genuine replacement sensors specifically for use with Sensepoint XRL. Attempting to use non-genuine sensors could result in malfunction of the product.

⚠ WARNING

Sensor replacement must be done under unpowered condition when there is no doubt that the Sensepoint XRL is in fresh air. Never attempt to replace the sensor without a) removing power to the Sensepoint XRL, b) ensuring non-hazardous atmosphere and c) placing the sensor into the sensor maintenance mode.

Connect your smartphone to the Sensepoint XRL via Bluetooth. Tap the Maintenance button and select Change Sensor. Follow the on-screen instructions.

In cases where a smartphone running the mobile app is not available, follow the steps below:

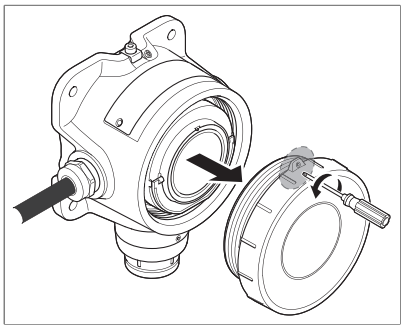

1. Loosen the grub screw on top of the front cover.
2. Unscrew the front cover counterclockwise until it is open.

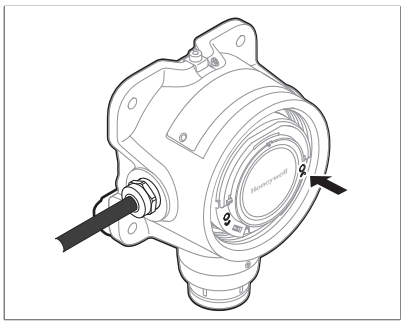

3. Press and hold the UP button for 10 seconds to switch to sensor replacement mode. In this mode, the detector output is inhibited and the sensor circuits are internally isolated.

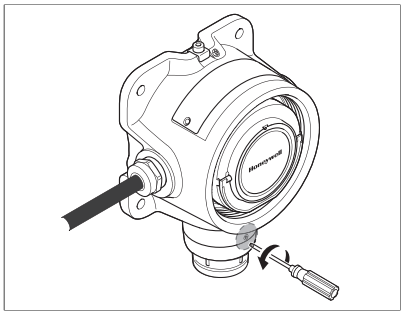

4. Loosen the grub screw on top of the sensor cap.

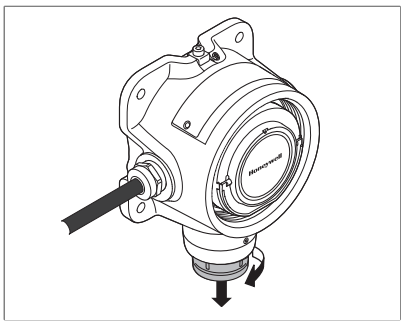

5. Turn the sensor cap counterclockwise to remove it.

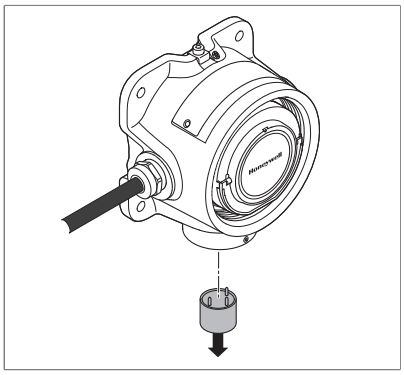

6. Pull out the gas sensor to remove it.
7. Ensuring that the sensor pins are correctly aligned, insert a new sensor into the sensor socket.

⚠ CAUTION

Do not force the sensor into the socket, otherwise it may be damaged.

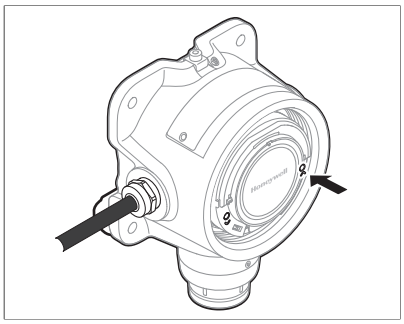

8. Press and hold the UP button for 2 seconds to activate warm-up mode. In this mode, the output continues to be held in its inhibit state.
9. Replace the sensor cap and tighten the grub screw.
10. Switch to normal monitoring mode.
11. Perform a calibration in accordance with **Calibration** on page 32.
12. Reassemble the detector in the reverse order.

4.7 Resetting Alarms and Faults

The default setting of each alarm is non-latching type. If you want to have latching type alarm, change the alarm mode using the Sensepoint mobile app.

1. Pair with the target detector and tap **Settings**.
2. Tap the edit button ✎ at the upper right side of the screen.
3. Scroll down to **Alarm latching** and choose **Latching**.
4. Scroll down to the bottom of the page and tap **Apply Settings** to save the change.

When there are latched gas alarm or faults, reset them using either of these two methods:

- Use the mobile app to pair with the detector, and tap **Maintenance** > **Reset Alarm**.
- Alternatively, press the UP or DOWN button shortly.

This will reset latched alarms and faults, and initiate a self diagnostics to make sure there is no warning or fault in the detector.

Chapter 5
Mobile App

Use the Sensepoint App to allow your smart device to connect to Sensepoint XRL. This mobile app makes it much easier to configure and maintain Sensepoint XRL detectors. The general procedure of using the mobile app is as follows:

1. Download **Sensepoint App** from Google Play Store. Install and launch the app.
2. Create and register a user account, and log on with the created account information.
3. To associate with one or more gas detectors, scan the QR code on the sheet included in the box or enter its Activation Key and Device Serial Number.
4. Complete the installation of the detectors.
5. On the app's home screen, tap **DETECTORS** to scan for available detectors.
6. Select a detector from the detector list to pair with.
7. Look for the detector whose Status Indicator is flashing blue.
8. Tap **Confirm Detector** to pair with that detector. Otherwise, tap **Return to list** to select one of the others.
9. To connect to detectors that are not added to your user account, you will need registration sheet containing the device QR code. This can also be found on a label on the rear of the electronics module.

When a Bluetooth connection is established, the detector's reading is displayed on the app interface with the gas type.

For details how to use the mobile app, refer to the Sensepoint App manual.

Appendix A
Detector Parameters

Gas	Detector Type	User Selectable Range	Default Range	Steps	User Selectable Cal Gas Range	Default Cal Point	Response Time t90 (s)	Resolution	Accuracy (ppm or % of applied gas which is the greater)
Oxygen	SPLCO1...	Fixed, 25.0% vol	25.0% vol	N/A		20.9% vol	< 30	0.1% vol	< ±0.6 %vol
Flammable (CAT)	SPLCF6...	20 to 100% LEL	100% LEL	10% LEL	20 to 70% of selected full scale range (except oxygen)	50% LEL	< 30	1% LEL	< ±5 %LEL
Carbon Monoxide	SPLCC1...	50 to 1000 ppm	300 ppm	10 ppm		100 ppm	< 40	1 ppm	< ±2 ppm or ±20%
Hydrogen Sulfide (low range)	SPLCH1...	10.0 to 50.0 ppm	50.0 ppm	1.0 ppm		25.0 ppm	< 40	0.1 ppm	< ±0.3 ppm or ±20%
Hydrogen Sulfide (high range)	SPLCH2...	50 to 200 ppm	100 ppm	10 ppm		25 ppm	< 40	1 ppm	< ±5 ppm or ±20%
Hydrogen	SPLCG1...	1000 ppm only	1000 ppm	N/A		500 ppm	< 105	1 ppm	< ±8 ppm or ±20%
Nitrogen Dioxide	SPLCN1...	5.0 to 50.0 ppm	20.0 ppm	5.0 ppm		5 ppm	< 60	0.1 ppm	< ±0.2 ppm or ±20%

Gas	Operating Temperature		Default Alarm Points & Types						LAL	LDL
	Min	Max	A1	Default A1 Type	A1 Options	A2	Default A2 Type	A2 Options		
Oxygen	-20 °C	50 °C	23.5% vol	Rising	Rising/Falling/Disabled	19.5% vol	Falling	Rising/Falling/Disabled	5.0% vol	20.6 to 21.2% vol 0 to 3.0% vol
Flammable (CAT)	-20 °C	50 °C	20% LEL	Rising	Rising/Disabled	50% LEL	Rising	Rising/Disabled	10% LEL	6% LEL
Carbon Monoxide	-20 °C	50 °C	30 ppm	Rising	Rising/Disabled	100 ppm	Rising	Rising/Disabled	15 ppm	13 ppm
Hydrogen Sulfide (low range)	-20 °C	50 °C	10 ppm	Rising	Rising/Disabled	20 ppm	Rising	Rising/Disabled	1.0 ppm	0.8 ppm
Hydrogen Sulfide (high range)	-20 °C	50 °C	10 ppm	Rising	Rising/Disabled	20 ppm	Rising	Rising/Disabled	5 ppm	1 ppm
Hydrogen	-20 °C	50 °C	200 ppm	Rising	Rising/Disabled	400 ppm	Rising	Rising/Disabled	100 ppm	30 ppm
Nitrogen Dioxide	-20 °C	50 °C	0.7 ppm	Rising	Rising/Disabled	2.0 ppm	Rising	Rising/Disabled	0.6 ppm	0.3 ppm

NOTE

Performance figures are based on the following:

- Extended operating temperature range of −40 °C to +65 °C (−40 °F to +149 °F) for all sensors except for H_2 EC sensors, with an accuracy of ±30% of applied gas from −20 °C to −40 °C (−4 °F to −40 °F) and +50 °C to +65 °C (+131 °F to +149 °F). Long term continuous operation in the extended temperature range may cause degradation in sensor performance.
- Temperature range of over −20 °C to +50 °C. Oxygen versions is ±0.9% vol. The accuracy of the flammable (CAT) versions is ±5%LEL.
- Operating temperature range of −20 °C to 50 °C for all sensors with an accuracy of ±20% of applied gas.
- The humidity of the test gas is 50% RH. The performance values given are valid between 10% and 90% RH.
- For H_2S and NO_2 versions, accuracy degradation may be experienced in high humidity environments. Recalibrate the unit in the environment in which it is going to be used.
- Measured test units calibrated at 50% of full scale
- Measurements are based on gas being applied using the calibration adapter at a rate of 500 ml/min for a period of 5 minutes (oxygen, flammable [CAT], carbon monoxide, hydrogen sulfide), 6 minutes (hydrogen), and 10 minutes (nitrogen dioxide)
- Response time (T90) may increase when operating in lower temperature conditions.
- For H_2 version, recommend to recalibrate when use in low temperature environment (< −10 °C).

Disclaimer for Sensepoint XRL's Canadian flammable gas performance approval (CSA C22.2 No.152)

Sensepoint XRL's flammable sensor was evaluated for CSA C22.2 No.152-M1984 (R2016). The evaluation is valid only with the calibration flow rate 500 cc/min, CH4 gas, catalytic bead sensor and 4–20 mA output. In terms of 4–20 mA, 250 Ω load resistor was attached for the evaluation.

If Sensepoint XRL's flammable sensor is suspected to be damaged by aggressive substances, please perform bump test and calibration per this manual.

Appendix B
Troubleshooting

B.1 Warning

	Description	Troubleshooting
Warning 1	Calibration Overdue	Calibrate the unit.
Warning 3	BLE failure (BLE version only)	Power-cycle the unit. If same warning occurs again, contact manufacturer.
Warning 4	Time/date not set (RTC not set) / RTC reset abnormally	Configure unit time. If same warning occurs again, contact manufacturer.
Warning 5	Log memory corrupted (CRC not matched)	Power-cycle the unit. Event log might be lost.
Warning 6	Certificate is corrupted or missing certificate	Contact manufacturer.
Warning 7	Over-range warning	Calibrate the unit.
Warning 8	Under-range warning	Calibrate the unit.

B.2 Fault

	Description	Troubleshooting
Fault 1	Internal communication failure	Power-cycle the unit. If same fault occurs again, contact manufacturer.
Fault 2	Cell failure	Check the sensor connection. If same fault occurs again, replace sensor.
Fault 3	Cell is producing a negative reading	Calibrate the unit
Fault 4	EEPROM is corrupted	Reconfigure the unit by using mobile app. If same fault occurs again, contact manufacturer.
Fault 5	MCU operating voltage failure	Power-cycle the unit. If same fault occurs again, contact manufacturer.
Fault 6	RAM read/write fault	Power-cycle the unit. If same fault occurs again, contact manufacturer.
Fault 7	Flash memory corrupted	Reconfigure the unit by using mobile app
Fault 8	Code memory failure	Power-cycle the unit. If same fault occurs again, contact manufacturer.
Fault 9	mA output failure (mA output version only)	Check whether loopback resistor is connected correctly.
Fault 10	Supplied voltage failure	Power-cycle the unit. If same fault occurs again, contact manufacturer.
Fault 11	Internal HW Fault	Power-cycle the unit. If same fault occurs again, contact manufacturer.
Fault 12	Internal SW Fault	Power-cycle the unit. If same fault occurs again, contact manufacturer.
Fault 13	Calibration Overdue	Calibrate the unit.

Appendix C
Ordering Information

C.1 Detectors

Part number	Description
SPLIO1BAXCNUZZ	Sensepoint XRL Transmitter, cULus C1D1, Type 4X, O_2 25.0% v/v, 4–20 mA, Charcoal, ¾″ NPT
SPLIO1BAXYNUZZ	Sensepoint XRL Transmitter, cULus C1D1, Type 4X, O_2 25.0% v/v, 4–20 mA, Yellow, ¾″ NPT
SPLIO1BMXCNUZZ	Sensepoint XRL Transmitter, cULus C1D1, Type 4X, O_2 25.0% v/v, Modbus, Charcoal, ¾″ NPT
SPLIO1BMXYNUZZ	Sensepoint XRL Transmitter, cULus C1D1, Type 4X, O_2 25.0% v/v, Modbus, Yellow, ¾″ NPT
SPLIC1BAXCNUZZ	Sensepoint XRL Transmitter, cULus C1D1, Type 4X, CO, 4–20 mA, Charcoal, ¾″ NPT
SPLIC1BAXYNUZZ	Sensepoint XRL Transmitter, cULus C1D1, Type 4X, CO, 4–20 mA, Yellow, ¾″ NPT
SPLIC1BMXCNUZZ	Sensepoint XRL Transmitter, cULus C1D1, Type 4X, CO, Modbus, Charcoal, ¾″ NPT
SPLIC1BMXYNUZZ	Sensepoint XRL Transmitter, cULus C1D1, Type 4X, CO, Modbus, Yellow, ¾″ NPT
SPLIH1BAXCNUZZ	Sensepoint XRL Transmitter, cULus C1D1, Type 4X, H_2S (L), 4–20 mA, Charcoal, ¾″ NPT
SPLIH1BAXYNUZZ	Sensepoint XRL Transmitter, cULus C1D1, Type 4X, H_2S (L), 4–20 mA, Yellow, ¾″ NPT
SPLIH1BMXCNUZZ	Sensepoint XRL Transmitter, cULus C1D1, Type 4X, H_2S (L), Modbus, Charcoal, ¾″ NPT
SPLIH1BMXYNUZZ	Sensepoint XRL Transmitter, cULus C1D1, Type 4X, H_2S (L), Modbus, Yellow, ¾″ NPT
SPLIH2BAXCNUZZ	Sensepoint XRL Transmitter, cULus C1D1, Type 4X, H_2S (H), 4–20 mA, Charcoal, ¾″ NPT
SPLIH2BAXYNUZZ	Sensepoint XRL Transmitter, cULus C1D1, Type 4X, H_2S (H), 4–20 mA, Yellow, ¾″ NPT
SPLIH2BMXCNUZZ	Sensepoint XRL Transmitter, cULus C1D1, Type 4X, H_2S (H), Modbus, Charcoal, ¾″ NPT
SPLIH2BMXYNUZZ	Sensepoint XRL Transmitter, cULus C1D1, Type 4X, H_2S (H), Modbus, Yellow, ¾″ NPT
SPLIG1BAXCNUZZ	Sensepoint XRL Transmitter, cULus C1D1, Type 4X, H_2, 4–20 mA, Charcoal, ¾″ NPT
SPLIG1BAXYNUZZ	Sensepoint XRL Transmitter, cULus C1D1, Type 4X, H_2, 4–20 mA, Yellow, ¾″ NPT
SPLIG1BMXCNUZZ	Sensepoint XRL Transmitter, cULus C1D1, Type 4X, H_2, Modbus, Charcoal, ¾″ NPT
SPLIG1BMXYNUZZ	Sensepoint XRL Transmitter, cULus C1D1, Type 4X, H_2, Modbus, Yellow, ¾″ NPT
SPLIN1BAXCNUZZ	Sensepoint XRL Transmitter, cULus C1D1, Type 4X, NO_2, 4–20 mA, Charcoal, ¾″ NPT
SPLIN1BAXYNUZZ	Sensepoint XRL Transmitter, cULus C1D1, Type 4X, NO_2, 4–20 mA, Yellow, ¾″ NPT
SPLIN1BMXCNUZZ	Sensepoint XRL Transmitter, cULus C1D1, Type 4X, NO_2, Modbus, Charcoal, ¾″ NPT
SPLIN1BMXYNUZZ	Sensepoint XRL Transmitter, cULus C1D1, Type 4X, NO_2, Modbus, Yellow, ¾″ NPT

Part number	Description
SPLIF6BAXCNUZZ	Sensepoint XRL Transmitter, cULus C1D1, Type 4X, CH_4 (CAT), 4–20 mA, Charcoal, ¾″ NPT
SPLIF6BAXYNUZZ	Sensepoint XRL Transmitter, cULus C1D1, Type 4X, CH_4 (CAT), 4–20 mA, Yellow, ¾″ NPT
SPLIF6BMXCNUZZ	Sensepoint XRL Transmitter, cULus C1D1, Type 4X, CH_4 (CAT), Modbus, Charcoal, ¾″ NPT
SPLIF6BMXYNUZZ	Sensepoint XRL Transmitter, cULus C1D1, Type 4X, CH_4 (CAT), Modbus, Yellow, ¾″ NPT
SPLIO1BAXCMAZZ	Sensepoint XRL Transmitter, ATEX/IECEx Ex d, IP66, O_2 25.0% v/v, 4–20 mA, Charcoal, M20
SPLIO1BAXYMAZZ	Sensepoint XRL Transmitter, ATEX/IECEx Ex d, IP66, O_2 25.0% v/v, 4–20 mA, Yellow, M20
SPLIO1BMXCMAZZ	Sensepoint XRL Transmitter, ATEX/IECEx Ex d, IP66, O_2 25.0% v/v, Modbus, Charcoal, M20
SPLIO1BMXYMAZZ	Sensepoint XRL Transmitter, ATEX/IECEx Ex d, IP66, O_2 25.0% v/v, Modbus, Yellow, M20
SPLIC1BAXCMAZZ	Sensepoint XRL Transmitter, ATEX/IECEx Ex d, IP66, CO, 4–20 mA, Charcoal, M20
SPLIC1BAXYMAZZ	Sensepoint XRL Transmitter, ATEX/IECEx Ex d, IP66, CO, 4–20 mA, Yellow, M20
SPLIC1BMXCMAZZ	Sensepoint XRL Transmitter, ATEX/IECEx Ex d, IP66, CO, Modbus, Charcoal, M20
SPLIC1BMXYMAZZ	Sensepoint XRL Transmitter, ATEX/IECEx Ex d, IP66, CO, Modbus, Yellow, M20
SPLIH1BAXCMAZZ	Sensepoint XRL Transmitter, ATEX/IECEx Ex d, IP66, H_2S (L), 4–20 mA, Charcoal, M20
SPLIH1BAXYMAZZ	Sensepoint XRL Transmitter, ATEX/IECEx Ex d, IP66, H_2S (L), 4–20 mA, Yellow, M20
SPLIH1BMXCMAZZ	Sensepoint XRL Transmitter, ATEX/IECEx Ex d, IP66, H_2S (L), Modbus, Charcoal, M20
SPLIH1BMXYMAZZ	Sensepoint XRL Transmitter, ATEX/IECEx Ex d, IP66, H_2S (L), Modbus, Yellow, M20
SPLIH2BAXCMAZZ	Sensepoint XRL Transmitter, ATEX/IECEx Ex d, IP66, H_2S (H), 4–20 mA, Charcoal, M20
SPLIH2BAXYMAZZ	Sensepoint XRL Transmitter, ATEX/IECEx Ex d, IP66, H_2S (H), 4–20 mA, Yellow, M20
SPLIH2BMXCMAZZ	Sensepoint XRL Transmitter, ATEX/IECEx Ex d, IP66, H_2S (H), Modbus, Charcoal, M20
SPLIH2BMXYMAZZ	Sensepoint XRL Transmitter, ATEX/IECEx Ex d, IP66, H_2S (H), Modbus, Yellow, M20
SPLIG1BAXCMAZZ	Sensepoint XRL Transmitter, ATEX/IECEx Ex d, IP66, H_2, 4–20 mA, Charcoal, M20
SPLIG1BAXYMAZZ	Sensepoint XRL Transmitter, ATEX/IECEx Ex d, IP66, H_2, 4–20 mA, Yellow, M20
SPLIG1BMXCMAZZ	Sensepoint XRL Transmitter, ATEX/IECEx Ex d, IP66, H_2, Modbus, Charcoal, M20
SPLIG1BMXYMAZZ	Sensepoint XRL Transmitter, ATEX/IECEx Ex d, IP66, H_2, Modbus, Yellow, M20
SPLIN1BAXCMAZZ	Sensepoint XRL Transmitter, ATEX/IECEx Ex d, IP66, NO_2, 4–20 mA, Charcoal, M20
SPLIN1BAXYMAZZ	Sensepoint XRL Transmitter, ATEX/IECEx Ex d, IP66, NO_2, 4–20 mA, Yellow, M20
SPLIN1BMXCMAZZ	Sensepoint XRL Transmitter, ATEX/IECEx Ex d, IP66, NO_2, Modbus, Charcoal, M20
SPLIN1BMXYMAZZ	Sensepoint XRL Transmitter, ATEX/IECEx Ex d, IP66, NO_2, Modbus, Yellow, M20
SPLIF6BAXCMAZZ	Sensepoint XRL Transmitter, ATEX/IECEx Ex d, IP66, CH_4 (CAT), 4–20 mA, Charcoal, M20
SPLIF6BAXYMAZZ	Sensepoint XRL Transmitter, ATEX/IECEx Ex d, IP66, CH_4 (CAT), 4–20 mA, Yellow, M20
SPLIF6BMXCMAZZ	Sensepoint XRL Transmitter, ATEX/IECEx Ex d, IP66, CH_4 (CAT), Modbus, Charcoal, M20
SPLIF6BMXYMAZZ	Sensepoint XRL Transmitter, ATEX/IECEx Ex d, IP66, CH_4 (CAT), Modbus, Yellow, M20

C.2 Accessories

Part number	Description
SPXRLCAL	Sensepoint XRL Calibration Cap
SPXRLFLW	Sensepoint XRL Flow Housing
SPXRLDMK	Sensepoint XRL Duct Mount Kit
2308B0923	Pole Mount Bracket Kit

C.3 Consumables

Part number	Description
SPXRLZZO1SS	Sensepoint XRL Replacement Sensor, O_2
SPXZZRLF6SS	Sensepoint XRL Replacement Sensor, Flammable CAT
SPXCLRLC1SS	Sensepoint XCL/XRL Replacement Sensor, CO
SPXCLRLH1SS	Sensepoint XCL/XRL Replacement Sensor, H_2S (Low and High Range)
SPXCLRLG1SS	Sensepoint XCL/XRL Replacement Sensor, H_2
SPXCLRLN1SS	Sensepoint XCL/XRL Replacement Sensor, NO_2

C.4 Spares

Part number	Description
SPXRLSK1	Sensepoint XRL Service Kit
SPXRLSCP	Sensepoint XRL Sensor Cover
SPXRLSCC	Sensepoint XRL Sensor Cover Trim Ring - Charcoal
SPXRLSCY	Sensepoint XRL Sensor Cover Trim Ring - Yellow
SPXRLCOV	Sensepoint XRL Top Cover
SPXRLSPN	Sensepoint XRL Stopping Plug ¾″ NPT
SPXRLSPM	Sensepoint XRL Stopping Plug M20
SPXRLMAO1	Sensepoint XRL Pluggable +Base Electronics Module, 4–20 mA, O_2
SPXRLMAC1	Sensepoint XRL Pluggable +Base Electronics Module, 4–20 mA, CO
SPXRLMAH1	Sensepoint XRL Pluggable +Base Electronics Module, 4–20 mA, H_2S (L)
SPXRLMAH2	Sensepoint XRL Pluggable +Base Electronics Module, 4–20 mA, H_2S (H)
SPXRLMAG1	Sensepoint XRL Pluggable +Base Electronics Module, 4–20 mA, H_2
SPXRLMAN1	Sensepoint XRL Pluggable +Base Electronics Module, 4–20 mA, NO_2
SPXRLMAF1	Sensepoint XRL Pluggable +Base Electronics Module, 4–20 mA, Flammable CAT
SPXRLMMO2	Sensepoint XRL Pluggable +Base Electronics Module, Modbus, O_2
SPXRLMMC1	Sensepoint XRL Pluggable +Base Electronics Module, Modbus, CO
SPXRLMMH1	Sensepoint XRL Pluggable +Base Electronics Module, Modbus, H_2S Low
SPXRLMMH2	Sensepoint XRL Pluggable +Base Electronics Module, Modbus, H_2S High
SPXRLMMG1	Sensepoint XRL Pluggable +Base Electronics Module, Modbus, H_2
SPXRLMMN1	Sensepoint XRL Pluggable +Base Electronics Module, Modbus, NO_2
SPXRLMMF1	Sensepoint XRL Pluggable +Base Electronics Module, Modbus, Flammable CAT

Appendix D
Warranty

Honeywell Analytics warrants the Sensepoint XRL gas detector against defective parts and workmanship.

This warranty does not cover consumable, batteries, fuses, normal wear and tear, or damage caused by accident, abuse, improper installation, unauthorized use, modification or repair, ambient environment, poisons, contaminants or abnormal operating conditions.

This warranty does not apply to sensors or components that are covered under separate warranties, or to any 3rd-party cables and components.

In no event shall Honeywell Analytics be liable for any damages or injury of any nature or kind, no matter how caused, that arise from incorrect handling or use of this equipment.

In no event shall Honeywell Analytics be liable for any equipment malfunction or damages whatsoever, including (without limitation) incidental, direct, indirect, special, and consequential damages, damages for loss of business profits, business interruption, loss of business information, or other pecuniary loss, resulting from the incorrect installation or use of this equipment.

Any claim under the Honeywell Analytics Product Warranty must be made within the warranty period and as soon as reasonably practicable after a defect is discovered. Please contact your local Honeywell Analytics Service representative to register your claim.

This is a summary. For full warranty terms please refer to the Honeywell Analytics' ***General Statement of Limited Product Warranty***, which is available on request.

Appendix E
Safety Information for Wireless Devices

E.1 FCC Compliance

This device complies with part 15 of the FCC Rules. Operation is subject to the following two conditions: (1) This device may not cause harmful interference, and (2) this device must accept any interference received, including interference that may cause undesired operation.

This transmitter must not be co-located or operated in conjunction with any other antenna or transmitter. This equipment complies with FCC radiation exposure limits set forth for an uncontrolled environment. End users must follow the specific operating instructions for satisfying RF exposure compliance.

NOTE

This equipment has been tested and found to comply with the limits for a Class A digital device, pursuant to part 15 of the FCC Rules. These limits are designed to provide reasonable protection against harmful interference when the equipment is operated in a commercial environment. This equipment generates, uses, and can radiate radio frequency energy and, if not installed and used in accordance with the instruction manual, may cause harmful interference to radio communications. Operation of this equipment in a residential area is likely to cause harmful interference in which case the user will be required to correct the interference at his own expense.

⚠ CAUTION

Changes or modifications not expressly approved by the manufacturer responsible for compliance could void the user's authority to operate the equipment.

This device complies with FCC radiation exposure limits set forth for an uncontrolled environment and meets the FCC radio frequency (RF) Exposure Guidelines. This device has very low levels of RF energy that it is deemed to comply without maximum permissive exposure evaluation (MPE). But it is desirable that it should be installed and operated keeping the radiator at least 20 cm or more away from person's body.

E.2 RED Compliance

Hereby, Honeywell Analytics Asia Pacific Co., Ltd. declares that this gas detector, Sensepoint XRL, is in compliance with the essential requirements and other relevant provisions of Directive 2014/53/EU.

Appendix F
Certification

Electrical Safety

- UL 61010-1
- CSA C22.2 No. 61010-1
- IEC/EN 61010-1

Electromagnetic Compatibility

- EN 50270:2015

Radio

- RED
- FCC
- BT SIG

Enclosure Protection

- IP66
- NEMA Type 4X

Gas Performance

- UL 2075 (CH_4 and CO)

Explosion-Proof Specification

- ATEX [DEMKO 17 ATEX ABCDX]

  Ex II 2 GD

Ex db IIC T4
Ex tb IIIC T135 °C
Tamb −40 to +65 °C

- cULus [E484838]

  Class I, Division 1 & 2, Groups B, C and D
  Class II, Division 1 & 2, Groups E, F and G
  Tamb −40 to +65 °C, Temp Code T4, IP66, Type 4X
  Class I, Zone 1, AEx d IIC T4
  Class I, Zone 21, AEx tb IIIC T4

- IECEx [IECEx UL 16 0066X]

  Ex db IIC T4
  Ex tb IIIC T135 °C
  Tamb −40 to +65 °C

Appendix G
Contact Information

For more contact information, visit www.honeywellanalytics.com.

Americas

Honeywell Analytics Inc.
405 Barclay Blvd. Lincolnshire, IL 60069, USA
Tel: +1 847 955 8200
Toll-free: +1 800 538 0363
Fax: +1 847 955 8210
detectgas@honeywell.com

Europe, Middle East, Africa

Life Safety Distribution GmbH
Javastrasse 2, 8604 Hegnau, Switzerland
Tel: +41 (0)44 943 4300
Fax: +41 (0)44 943 4398
gasdetection@honeywell.com

Asia Pacific, India

Honeywell Analytics Asia Pacific, Co., Ltd.
7F Sangam IT Tower, 434 World Cup Buk-ro, Mapo-gu, Seoul 03922, South Korea
Tel: +82 (0)2 6909 0300
Fax: +82 (0)2 2025 0388
India Tel: +91 124 4752700
analytics.ap@honeywell.com

Honeywell

THE POWER OF **CONNECTED**

Keep this manual for later use.

3017M5023_1 HAA170035
© 2017 Honeywell Analytics