# Sample Confirmation Letter

| | | | | | |
|---|---|---|---|---|---|
| custome | SZ PGST Co., Ltd | | Project Name | PG-105 | |
| Part Name | 433M Transmission antenna spring | | frequency range | 433±5MHz | |
| Part Number | DS-T433E15-07-A | | edition | R:A | |
| Sample type | built-in | | Issue Date | 2024.05.09 | |
| Prepared by | | Reviewed by | | Approve | |
| Customer Approval | ☐Fully recognized, can be purchased in large quantities witnessing:_____<br>☐ Limited edition recognition, limit_____, reason: _____ | | | | |
| Address | No.9 Building, Huafu Industrial Park, Huachang Road, Longhua District, Shenzhen, Guangdong, China | | | | |
| Product picture | 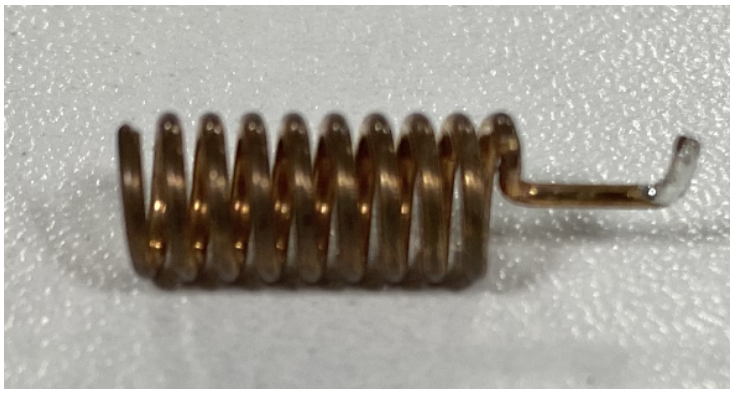 | | | | |

# Content

1、Cover).....1

2、Content.....2

3、Product Picture. ..... 3

4、Specification..... 4

5、Electricity test report. .....4-5

3、Product dimension diagram

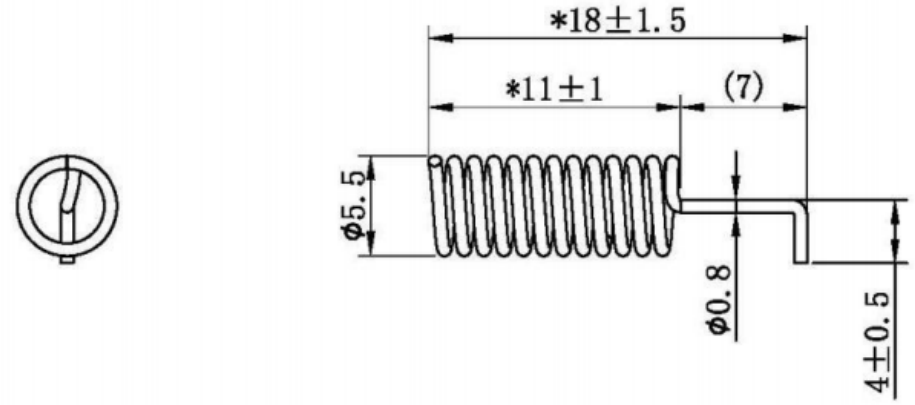

# 4. Specification

| | |
|---|---|
| FrequencyRange(MHz) | 433±5 |
| Antenna gain (dBi) | -2.9 |
| Efficiency（%） | 25 |
| VSWR | ≤3.0 For reference only |
| Input Impedance（Ω） | 50 |
| Operation Temperature | -40℃~65℃ |
| Storage Temperature | -40℃~65℃ |

5、Radiation Report

5.1 standing wave

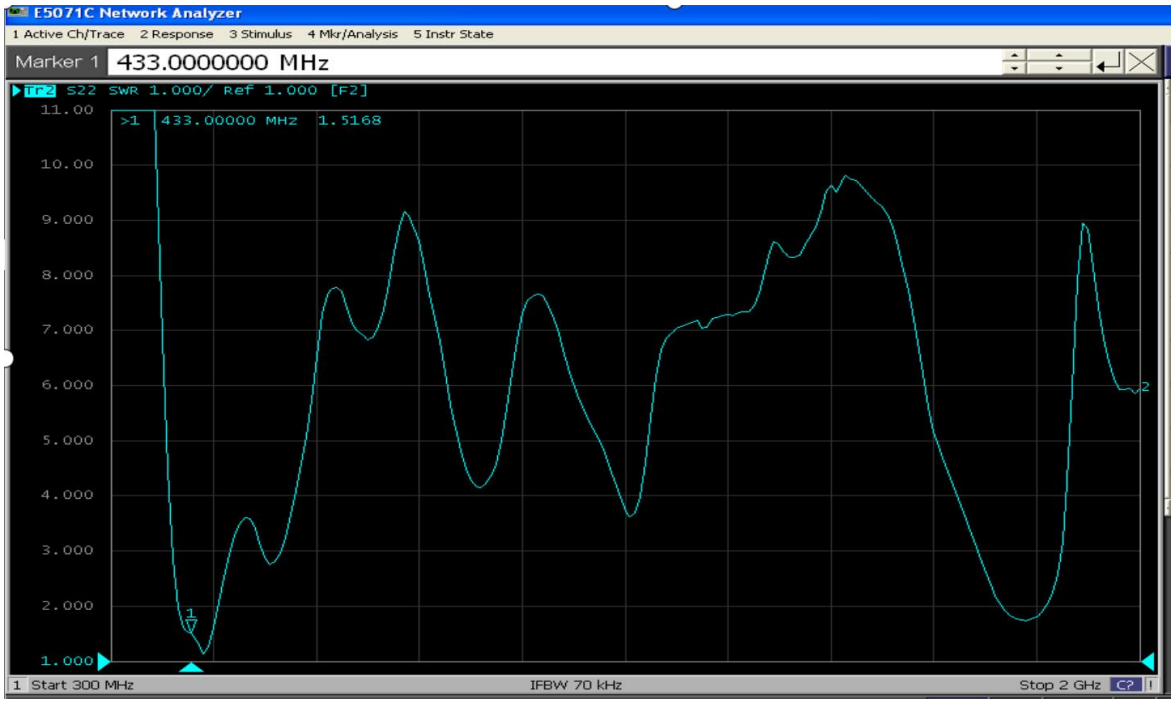


**5.2** Efficiency chart

| ANT | | |
|---|---|---|
| 频点frequency point | 效率efficiency | 增益gain |
| 423 | 25% | -3.7 |
| 427 | 25% | -3.5 |
| 431 | 28% | -3.5 |
| 435 | 28% | -2.9 |
| 439 | 28% | -3.3 |
| 443 | 28% | -3.0 |
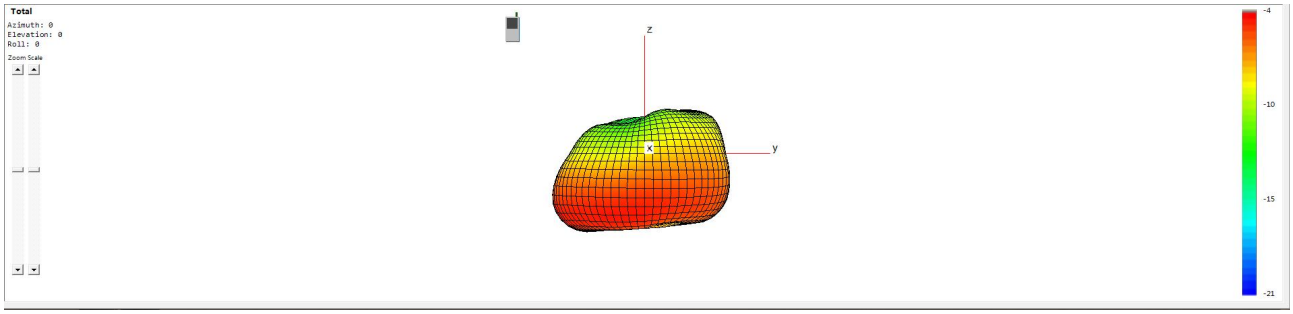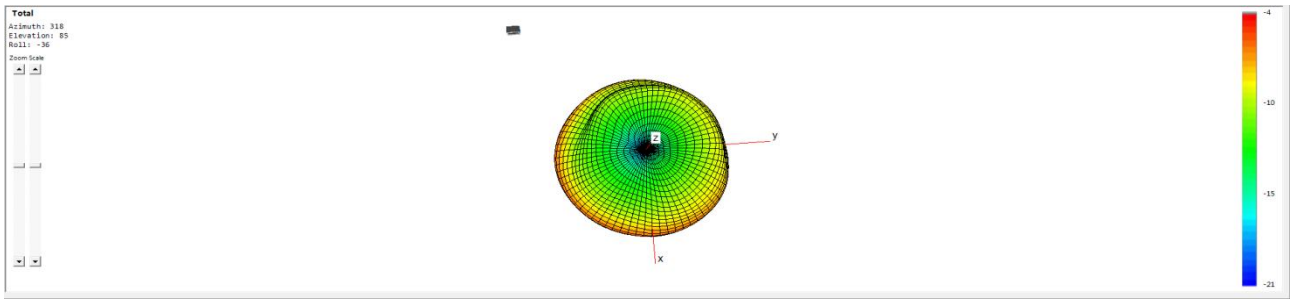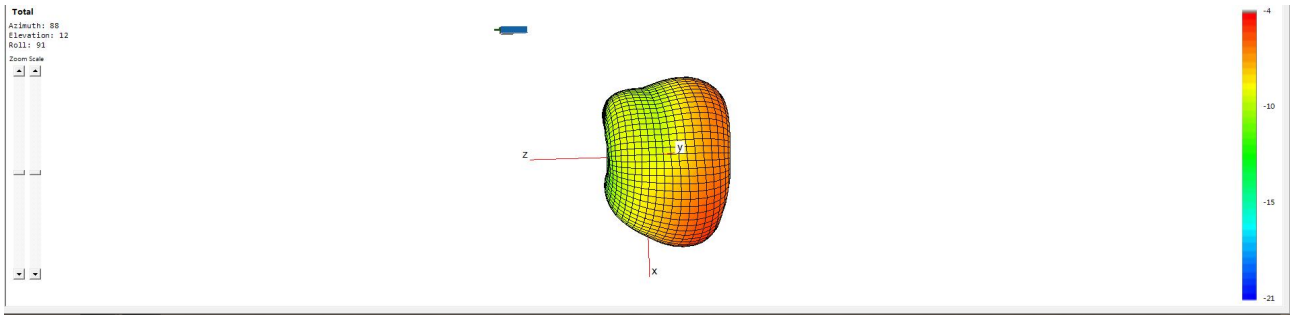
## 5.3 Directional diagram