# ■K-Band Microwave Sensor
# PD-V11-H instruction

CE RED FC REACH RoHS COMPLIANT

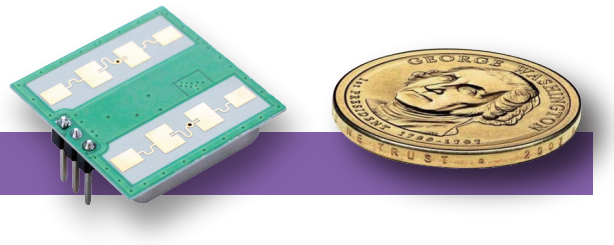

## PD-V11 24.1GHz Microwave Motion Sensor

### Application

- Intelligent switch
- Wall-hung switch
- Intruder detect

The PD-V11-H 24.1GHz microwave motion sensor is a K-band Doppler transceiver module.It is a planar antenna that we independently design and develop, with good transmission and reception matching in the layout. The internal layout we recalculated and arranged is more reasonable.Make the main frequency of the sensor more stable. Suitable for a wider range of ambient temperatures, these are our design patents, where V11-H has a higher noise ratio and sensitivity, one-third higher than the sensitivity of the products on the market.
The V11-M and V11-L can be customized to the user's sensitivity requirements. This sensor module is ideal for automatic lighting.The security domain acts as an intrusion detection sensor.

### Antenna Beam Pattern

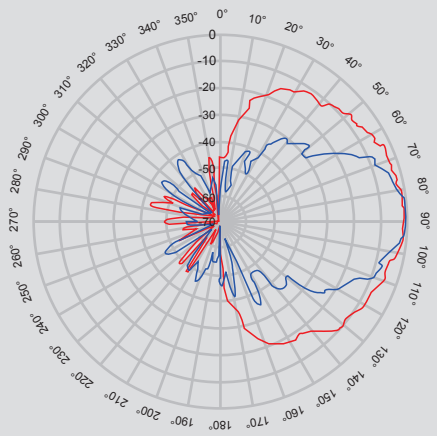


**According with EN 300440-V2.1.1、EN 62479：2010**
**RED directive - 2014/53/EU**
**According with FCC Part 15.249**
**According with EN 62321,ROHS directive - 2011/65/EU**
**According with REACH directive - 1907/2006/EC**

### Products size

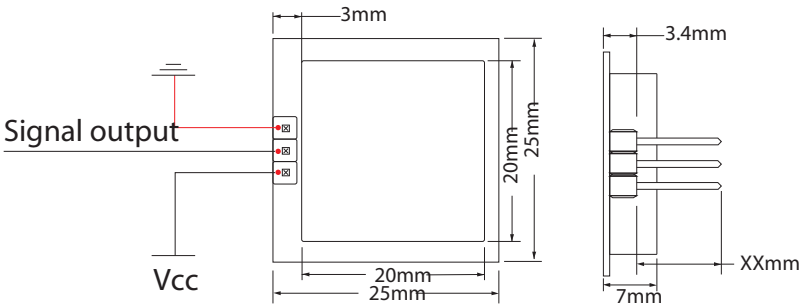


| Parameter | Notes | Min | Typ | Max | Units |
|---|---|---|---|---|---|
| Supply Voltage | $V_{cc}$ | 3.0 | 5.0 | 5.25 | V |
| Current Consumption | $I_{cc}$ | 20 | 35 | 38 | mA |
| Operation mode | Powered by PW, it can control the working current at 6-12mA | | | | |
| Pulse Repetition Frequency | 1.5-3 | | | | KHz |
| Operating Temperature | $T_{op}$ | -30-85 | | +100（Max.） | ℃ |
| Storage temperature | $T_{stg}$ | -10 | | +60 | ℃ |
| Stable time | | <20 | <20 | <20 | μSec |
| Frequency Setting | f | 24.088 | 24.100 | 24.115 | GHz |
| Radiated Power (EIRP) | $P_{out}$ | 2.0 | 2.5 | 3.0 | mW |
| Pulse Width | 10-30 | | | | μSec |
| Storage ambient humidity | 45%~65% | | | | RH |

**Note1:** The radiated emissions is designed to meet FCC rules.
**Note2:**The Received Signal Strength(RSS) is measured at the total 1 Ways path loss of 70dB.
**Note3:** The noise voltages are measured from 10Hz to 100Hz at the Output port, inside an Anechoic chamber.
**Note4:** Pulse operation

## Regulatory Module Integration Instructions

### 2.2 List of applicable FCC rules

This device complies with part 15.249 of the FCC Rules.

### 2.3 Summarize the specific operational use conditions

This module can be used in household electrical appliances as well as Intelligent switch , Wall-hung switch equipments. The input voltage to the module should be nominally 3.0 to 5.25 VDC ,typical value 5VDC and the ambient temperature of the module should not exceed 100℃.

This module using only one kind of antennas with maximum gain is 0dBi .Other antenna arrangement is not covered by this certification.

The antenna is not field replaceable. If the antenna needs to be changed, the certification should be re-applied.

### 2.4 Limited module procedures

This module can be used in Intelligent switch, Wall-hung switch, Intruder detect appliances. Normally host device should provide a power supply in range DC 3.0-5.25V, typically 5V DC for this module. The limited module manufacturer will reviews detailed test data or host designs prior to giving the host manufacturer approval.

### 2.5 Trace antenna designs

Not applicable

### 2.6 RF exposure considerations

The modular transmitter is authorized to be used in a specific type of host platform and installed such that it can be operated at closer than 20 cm to users or nearby persons.This transmitter must not be co-located or operating in conjunction with any other antenna or transmitter .

## 2.7 Antennas

Module contains two PCB antenna. No additional external connectors.

## 2.8 Label and compliance information

The outside of final products that contains this module device must display a label referring to the enclosed module. This exterior label can use wording such as: “Contains Transmitter Module FCC ID: 2AIWW-PD-V11-H ”,or “Contains FCC ID: 2AIWW-PD-V11-H ”, Any similar wording that expresses the same meaning may be used.

## 2.9 Information on test modes and additional testing requirements

a) The modular transmitter has been fully tested by the module grantee on the required frequency , it should not be necessary for the host installer to re-test.

It is recommended that the host product manufacturer, installing the modular transmitter, perform some investigative measurements to confirm that the resulting composite system does not exceed the spurious emissions limits or band edge limits.

b) The testing should check for emissions that may occur due to the intermixing of emissions with the other transmitters, digital circuitry, or due to physical properties of the host product (enclosure). This investigation is especially important when integrating multiple modular transmitters where the certification is based on testing each of them in a stand-alone configuration. It is important to note that host product manufacturers should not assume that because the modular transmitter is certified that they do not have any responsibility for final product compliance.

c) If the investigation indicates a compliance concern the host product manufacturer is obligated to mitigate the issue. Host products using a modular transmitter are subject to all the applicable individual technical rules as well as to the general conditions of operation in Sections 15.5, 15.15, and 15.29 to not cause interference. The operator of the host product will be obligated to stop operating the device until the interference has been corrected

Below are steps for on test modes：

Connect the module to DC 5V,it will transmit in sweeping mode.

## 2.10 Additional testing, Part 15 subpart B disclaimer

The final host / module combination need to be evaluated against the FCC Part 15B criteria for unintentional radiators in order to be properly authorized for operation as a Part 15 digital device.

The host integrator installing this module into their product must ensure that the final composite product complies with the FCC requirements by a technical assessment or evaluation to the FCC rules, including the transmitter operation and should refer to guidance in KDB 996369.

### Frequency spectrum to be investigated

For host products with certified modular transmitter, the frequency range of investigation of the composite system is specified by rule in Sections 15.33(a)(1) through (a)(3), or the range applicable to the digital device, as shown in Section 15.33(b)(1), whichever is the higher frequency range of investigation.

## Operating the host product

When testing the host product, all the transmitters must be operating.The transmitters can be enabled by using publicly-available drivers and turned on, so the transmitters are active. In certain conditions it might be appropriate to use a technology-specific call box (test set) where accessory devices or drivers are not available.

When testing for emissions from the unintentional radiator, the transmitter shall be placed in the receive mode or idle mode, if possible. If receive mode only is not possible then, the radio shall be passive (preferred) and/or active scanning. In these cases, this would need to enable activity on the communication BUS (i.e., PCIe, SDIO, USB) to ensure the unintentional radiator circuitry is enabled. Testing laboratories may need to add attenuation or filters depending on the signal strength of any active beacons (if applicable) from the enabled radio(s). See ANSI C63.4, ANSI C63.10 and ANSI C63.26 for further general testing details.

## FCC Statement

Any Changes or modifications not expressly approved by the party responsible for compliance could void the user's authority to operate the equipment. This device complies with part 15 of the FCC Rules. Operation is subject to the following two conditions: (1) This device may not cause harmful interference, and (2) This device must accept any interference received, including interference that may cause undesired operation.