Warranty Information:
Warranty Period: 6 Months
After-Sales Service: (86)0755-86535858-2501
Address: 23F, Unit 2, Block B, Wisdom Plaza, Qiaoxiang Road 4068, Nanshan, Shenzhen, China

Affix product serial number here

Mobile virtual reality headset

DR55Q-37

User Manual

Focalmax retains all rights to patents, trademarks, copyrights and other intellectual properties. Product features are subject to change without notice. The actual product may appear different from the images.

List of Items

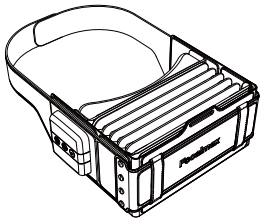

VR X1

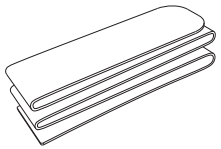

Velcro Fastening
Head Strap X1

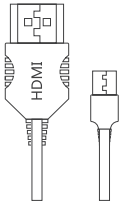

HDMI X1

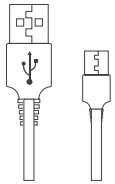

USB X1

Earphone X1

Product Description

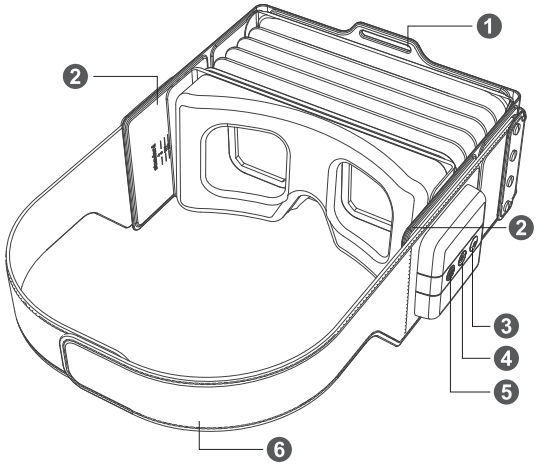

1. Head strap fastening loop
2. Object distance adjustment scale on both sides
3. Return
4. On/Off
5. Home
6. Strap

Product Description

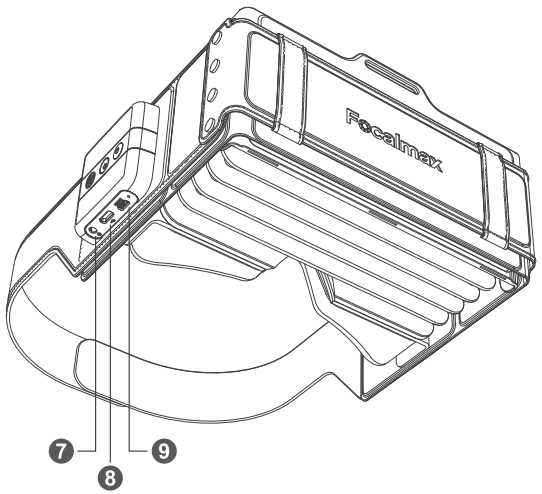

7. Earphone Jack
8. USB
9. HDMI

Operation Instruction

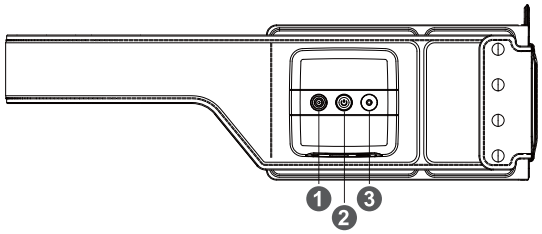

1 **Home**
Long Press: Enter to the home page
Short Press: Go into standby mode/wake up mode

2 **Power On/Off**
Long Press: Power On/Off
Short Press: Enter

3 **Return**
Short Press: Return to the previous menu

Operation Instruction

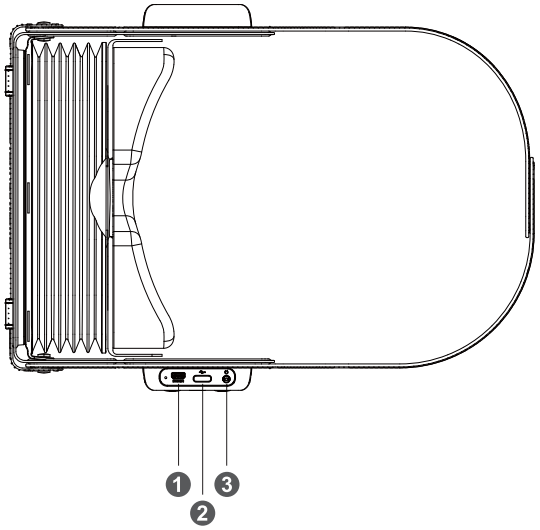

1 HDMI: Input video through HDMI

2 USB Tap-C: Charging; Transfer Files

3 Audio Out: Audio Output; Earphone Jack

How to Use

1 Adjust Object Distance

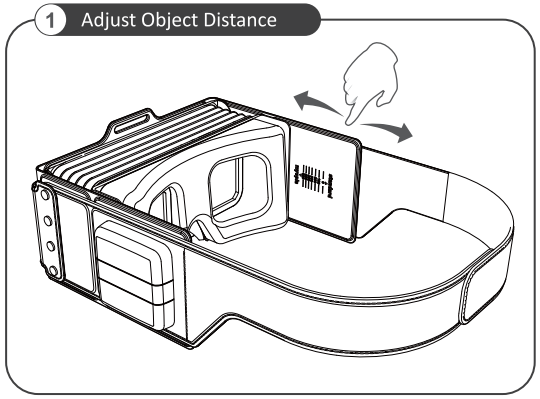

2 Wearing

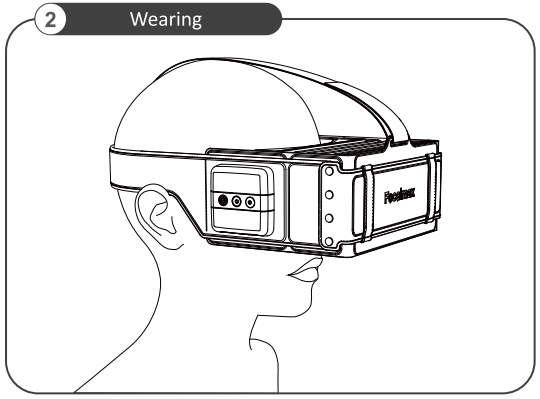

How to Use

3 Power On

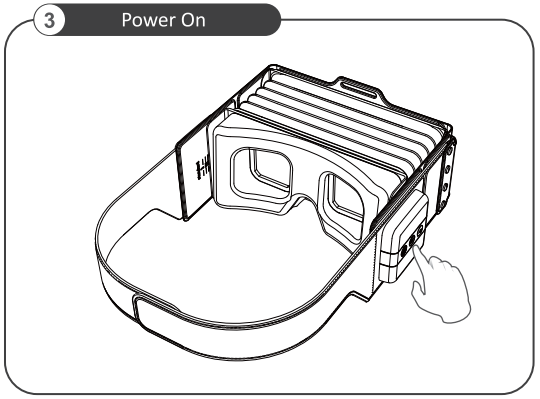

4 Choose

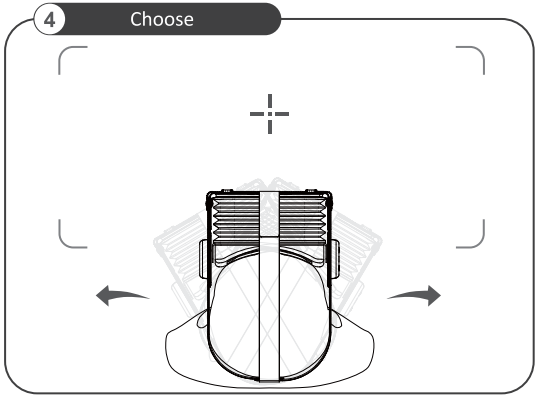

Software Instruction

1. Home Page

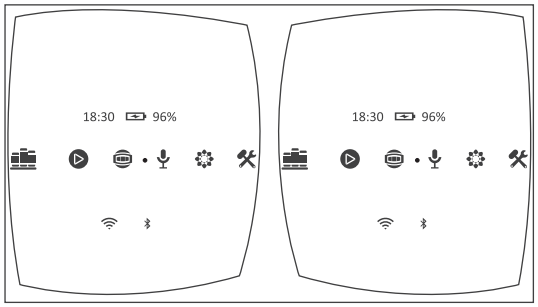

2. Local Application

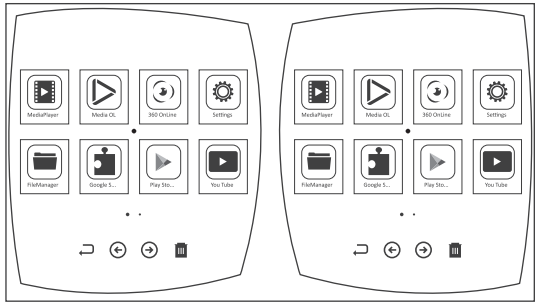

Software Instruction

3. Tool Page

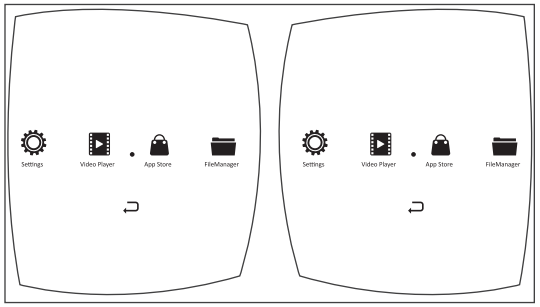

4. Local Player

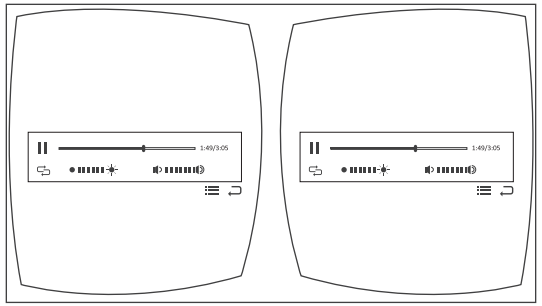

Remote Control

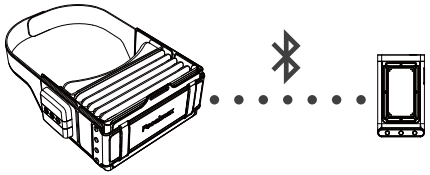

Connect the remote control via Bluetooth

Product Parameters

Chipset	MSM8937	
Internal Storage	16GB ROM +2 GB RAM	
Bluetooth	Bluetooth 2402-2480MHz	
WIFI	Supported WIFI 2412-2462MHz Compatible with 802.11 b/g/n	
Acceleration	Supported	
Geomagnetic Sensor	Supported	
Pressure Sensor	Supported	
External Ports	Earphone Out	3.5mm*1
	HDMI In	*1
	Type-C Port	*1 (For Charging)
Battery	3000mA Lithium Battery	
Optical Engine Specifications	FOV	110°
	Pupillary Distance	55-75mm (Adaptive)
	Focusing Method	Independent Adjustment for Each Eye
	Glasses-free Viewing	Supported (From 2.00 to -6.00 Diopters)
	Lens	Self-developed Aspheric Lens Design,ϕ50mm
Dimensions	<175mm*94mm*77.5mm	
Control	Connect to mobile phone by Bluetooth	

Certification

CE FC RoHS

Warranty Card

Dear valued customer:

Thank you for choosing Focalmax!
In order to ensure your legal rights, please pay attention to the following information:
If this product malfunctions or exhibits abnormal behavior during use, please contact the point of purchase for repair or replacement. There can be various reasons for malfunction, and sometimes these problems are not related to product quality. Please read the User Manual carefully before returning the product to the point of purchase.
We hereby declare that this product has passed inspection standards. A User Manual is attached. Please operate this product according to the User Manual.

You can access our professional service and support via the following methods

Customer Service:
(86) 0755-86535858-2502
After-Sales Service:
(86) 0755-86535858-2501

WeChat Customer Service

www.focalmax.net
（Website）

The warranty does not cover the product in the following situations

A.The purchase has already exceeded the warranty period;
B.Product damage is caused by not using, maintaining or taking care of the product according to the User Manual;
C.Product damage is caused by the dismantling, assembling or repair carried out by the user;
D.No valid warranty card or receipt;
E.The product model or the serial number on the warranty card does not match with that of the product;
F.Malfunction is caused by a force majeure event.

For more details, please visit the official website of Focalmax at www.focalmax.net

FCC NOTE

This device complies with Part 15 of the FCC Rules.

Operation is subject to the following two conditions: (1) this device may not cause harmful interference, and (2) this device must accept any interference received, including interference that may cause undesired operation.

THE MANUFACTURER IS NOT RESPONSIBLE FOR ANY RADIO OR TV INTERFERENCE CAUSED BY UNAUTHORIZED MODIFICATIONS OR CHANGE TO THIS EQUIPMENT. SUCH MODIFICATIONS OR CHANGE COULD VOID THE USER'S AUTHORITY TO OPERATE THE EQUIPMENT.

This equipment has been tested and found to comply with the limits for a Class B digital device, pursuant to part 15 of the FCC Rules. These limits are designed to provide reasonable protection against harmful interference in a residential installation. This equipment generates, uses and can radiate radio frequency energy and, if not installed and used in accordance with the instructions, may cause harmful interference to radio communications. However, there is no guarantee that interference will not occur in a particular installation. If this equipment does cause harmful interference to radio or television reception, which can be determined by turning the equipment off and on, the user is encouraged to try to correct the interference by one or more of the following measures:

-- Reorient or relocate the receiving antenna.

-- Increase the separation between the equipment and receiver.

-- Connect the equipment into an outlet on a circuit different from that to which the receiver is connected.

-- Consult the dealer or an experienced radio/TV technician for help.

This device complies with FCC's RF radiation exposure limits set forth for an uncontrolled environment, and it must not be collocated or operated in conjunction with any other antenna or transmitter