Rolling Door Remote Controller V2.0 User Manual

WiFi 控制器

UOI-BX01

聯順聯網股份有限公司

***Specifications are subject to change without notice**

Catalogue

Preface 0

Content 0

Install Requirement 0

Notice 0

Product Appearance Graphic 1

Installation Description 2

Case Description 3

APP Download 4

1. Establish new Home IOT/ IOT equipment 4

1-1 Confirm following steps 4

1-2 Following steps to setting RollingDoor Controller 7

1-3 Enter in Device 9

1-4 Apply iCloud Account 11

2. APP Description 12

2-1 Menu 12

2-2 iCloud sign in / out 12

2-3 Connection Setting 13

2-4 Logo Exchange 14

3. RollingDoor Controller Operation 15

3-1 RollingDoor Controller 15

3-2 Video Settings 16

3-2-1 Video equipment within linking group 16

3-2-2 Connect IPCAMERA Equipment 17

3-2-3 DVR Connected Equipment 18

3-4 Function Setting 19

Preface

Thanks for buying our Home IOT products. To ensure you have a good understanding to the product, please read the manual completely before you use. This manual is seen as the operated instructions not equal to product's certification. This manual's copyright belongs to UOI Technology Corp. Unauthorized is prohibited reprint. Specifications are subject to change without notice.

Content

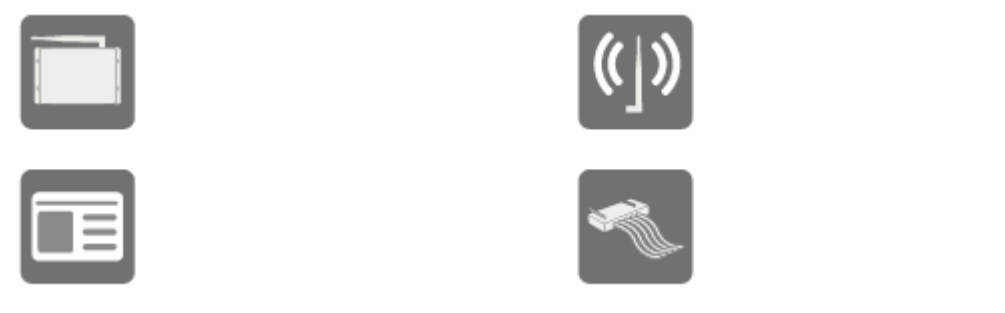

Install Requirement：

1. AC110/220V
2. UOI-RD02
3. The devices with IOS / ANDROID system
4. Wireless network controller
5. INTERNET Network

Notice：

1. Please do not place products in a humid environment and please operate products at 0 ℃ -40 ℃.
2. Do not put products close to the heat generating device or under direct sunlight, such as electric heater, stove, or other heat-generating equipment…and so on.
3. Do not expose the IOT device to water or moisture and also do not operate the machine in wet areas. If the machine becomes damp, please turn off the power immediately and contact the service. Moisture may damage the device and also cause static shock.
4. Please avoid falling product and install in a stable place.
5. Do not place other equipment on the top of product.
6. Please install in ventilated place, do not block the product's vents.
7. Only used in the rated input and output range.
8. Please do not disassemble this product.
9. Please keep dry with the product.

Product Appearance Graphic

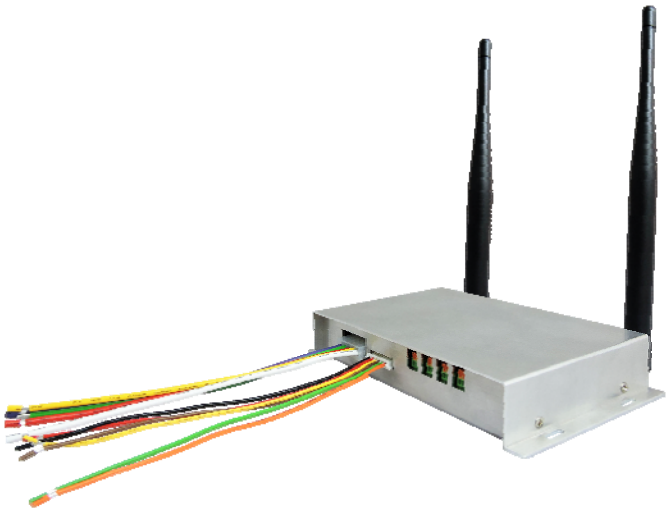

Case Description

NO.	FUNCTION	NO.	FUNCTION
1	Antenna connection	8	WAN network port
2	Reset Button	9	Control Cables Port
3	Private iCloud LED (Private iCloud LED twinkled when the device exists)	10	Relay Out Port
4	iCloud Sever LED (iCloud lights twinkled when the connection succeeded)	11	ALARM IN 1
5	Network LED (Only in wireless mode) (LED turns if the device connected to the wireless sharing device)	12	ALARM IN 2
6	Signal LED (Only in wireless mode) (Device connected to a wireless sharing device. Weak signal : LED constant light / Medium signal : Lights twinkled)	13	ALARM IN 3
7	LAN network port	14	POWER IN

Installation Description

Ir [redacted]

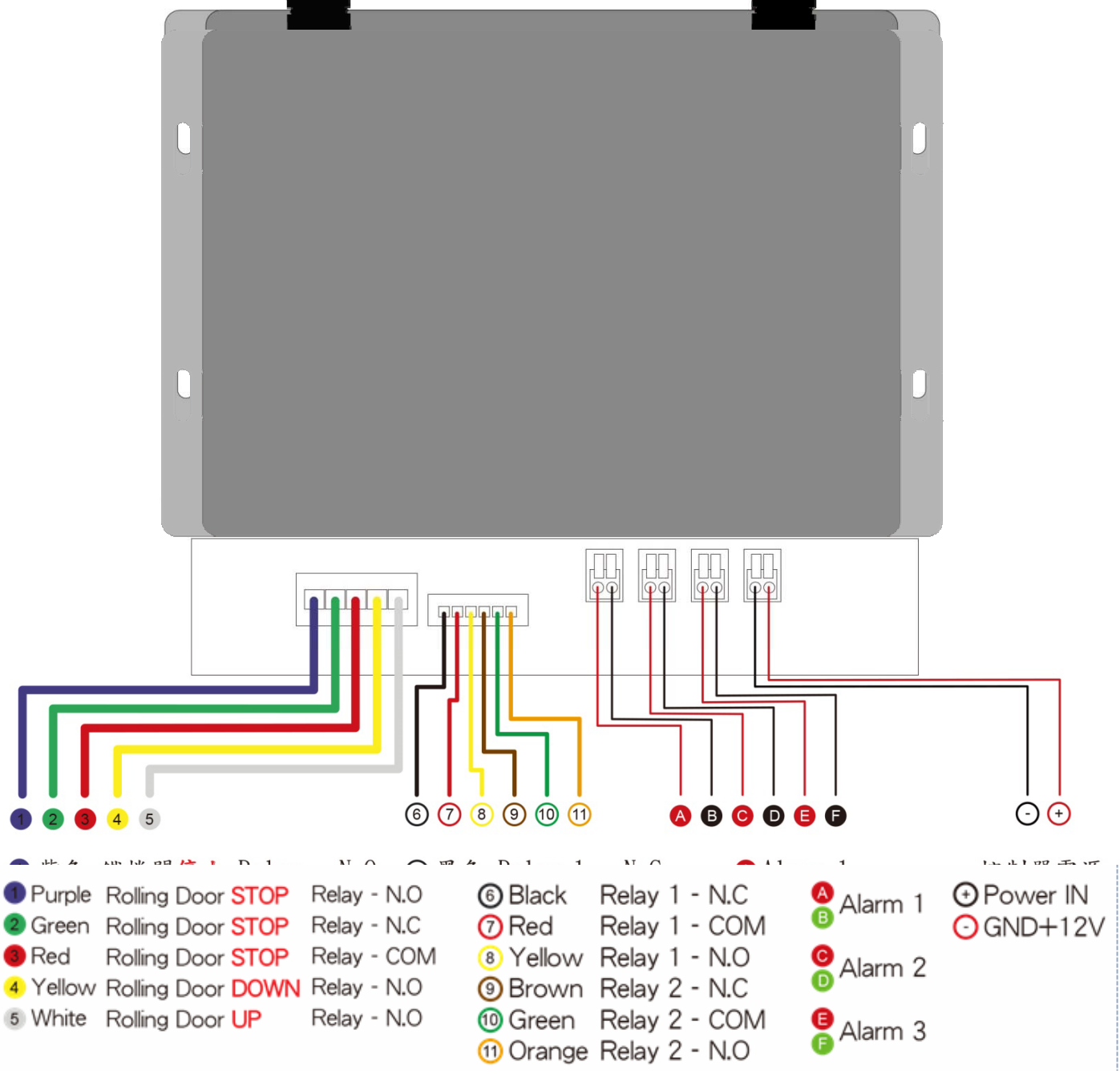

Rolling Door Controller **Connected Diagram**

鐵捲門控制器接線圖

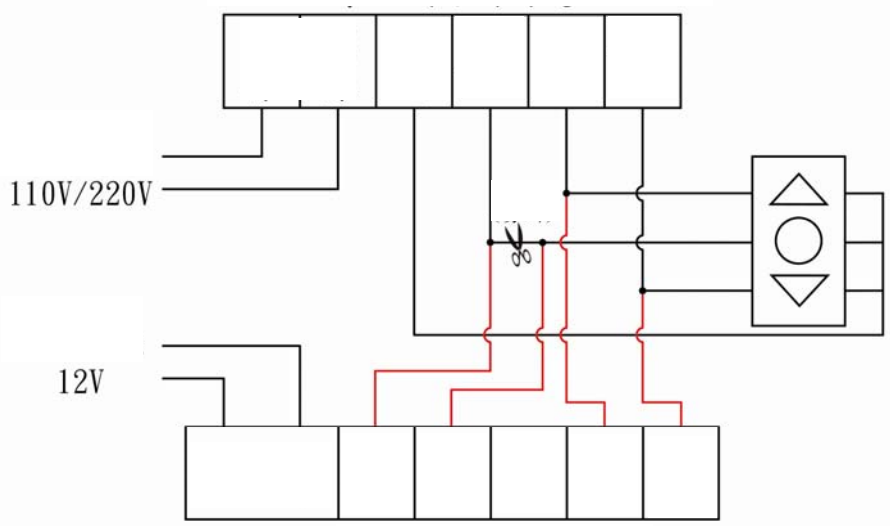

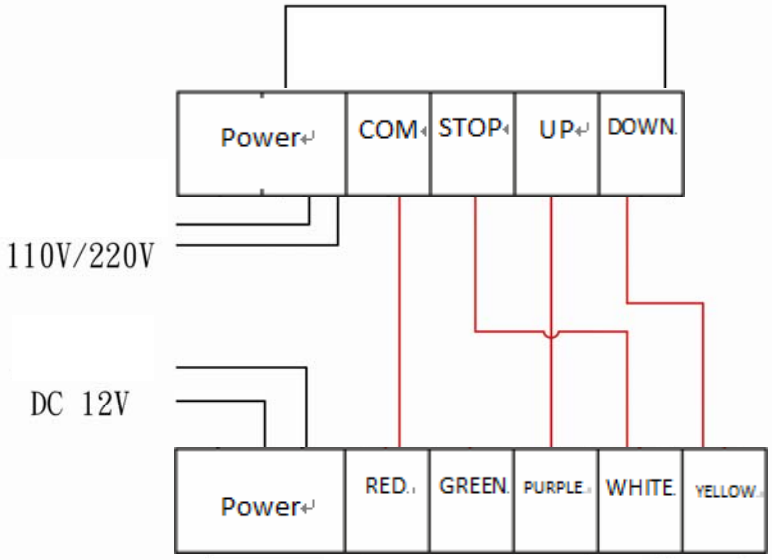

* Turn off the power before doing the process of construction
* AC110V/220V
* Traditional rolling door take as two-ways press fasten method. The motor's stop line connects with controller's red line. Controller's green line connects with manual switching stop line. Controller's white line control the rolling door up and the yellow line control it down. Up and down buttons hooked up.
* The connected way of traditional Rolling door make as two-ways control see as above
* Rolling door quick connected method need to hooked up on the rolling door control, please confirm the controller's stop switching is N.C or N.O switch, most of the rolling door is N.O.
* After the controller is powered off, press the up and down button of the roller door will come out jog condition when the red and green lines reversed.

Following steps to setting Rolling Door Controller

APP Download

This product must be set through the APP, please follow your mobile operating system, using QR Code below to download UDVR App. Search and install for "UDVR" from APP Store or Google PLAY Store

1. Establish new Home IOT/ IOT equipment

Following steps to establish home IOT. Setup your Home IOT parts to wireless mode, it will create a new wireless network of home IOT. If you need to add new equipment to Home IOT, select your Home IOT and add devices to the Home IOT network. Please follow steps as below to see the detail operate description.

1-1 Confirm following steps

1
Wi-Fi
智慧網路切換
由於未插入 SIM 卡，此功能已被停用。
Wi-Fi無線網路
正在掃描...
SIOTSetting_FFE14C
已儲存, 安全
掃描
Wi-Fi Direct

2
SIOTSetting_FFE14C
輸入密碼
E2345678
顯示密碼
顯示進階選項
取消
連線

3

4
連線設定
啟用有線模式
啟用無線模式

連線設定
啟用有線模式
啟用無線模式
選擇要連線的WiFi AP
輸入連線密碼
顯示密碼
上一頁
重新整理
下一步

5
連線設定
SK-
輸入家用物聯名稱
輸入家用物聯密碼
上一步
下一步

6
裝置設定
自定義裝置名稱
輸入裝置名稱
上一步
下一步

7
訊息
設定成功 請重開機後生效
確定

1-2 Enter in device

Default password: admin

1-3 Apply iCloud Account

This function only operates in local Network.

5
設定
物聯網網路設定
SSID -
密碼 -
顯示密碼
物聯網密碼設定
密碼 -
顯示密碼
網際網路設定
啟用Wi-Fi AP
SSID -
密碼 -
顯示密碼
伺服器帳號管理
輸入帳號密碼
修改密碼
申請新帳號
上一頁
版本資訊
確定

6
輸入帳號密碼
雲端伺服器選擇
選擇要連線的雲端伺服器
輸入帳號 -
請輸入帳號
輸入密碼 -
請輸入密碼
顯示密碼
確認密碼 -
再次輸入密碼
顯示密碼
上一步
確定

7
修改密碼
原本密碼 -
請輸入原本密碼
顯示密碼
輸入新密碼 -
請輸入新設定密碼
顯示密碼
確認新密碼 -
再次確認新密碼
顯示密碼
上一步
確定

1-4 Enter in iCloud

2. App Description

2-1 Menu

No.	Description
1	Select the controlling device
2	iCloud Account Log in / Out
3	Refresh
4	APP Version

2-2 iCloud Sign in /Out

NO.	Description
1	iCloud Account Log in /Out
2	Login iCloud Account & Password
3	iCloud Account Log Out

2-3 Connection Setting

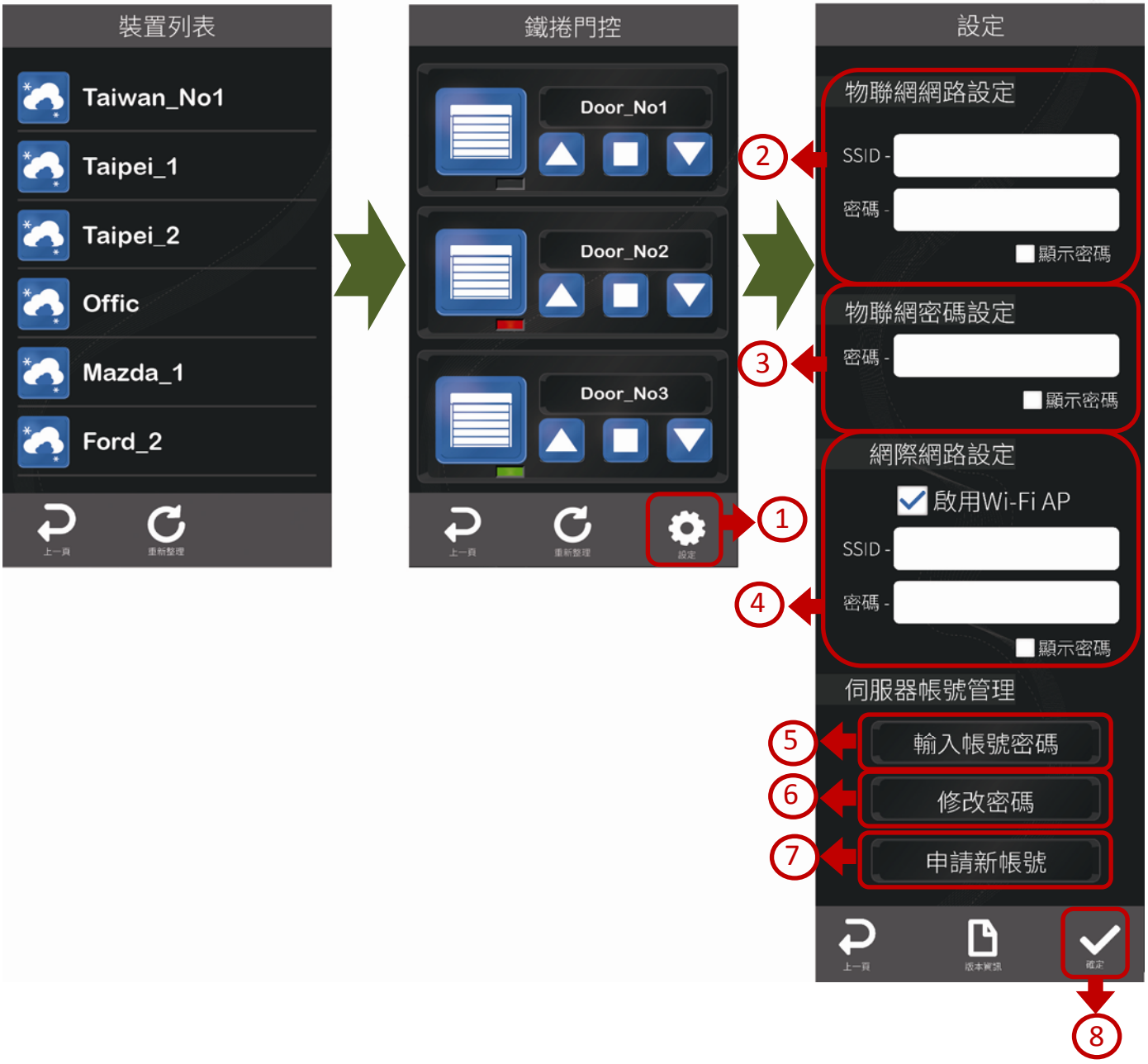

NO.	**Description**
1	Device settings (you must click from the local side)
2	Setting Home IOT SSID and password
3	Setting Home IOT password
4	Select the connection of Home IOT and Wi-Fi wireless sharing device
5	Enter iCloud Account & password (Note 1)
6	Modify iCloud password (Device must sign in iCloud Account) (Note 1)
7	Apply new Account" (First time user) (Note 1)
8	Device will reset after finished setting

Note 1: The way for applying iCloud Account, please see section 1-4

2-4 Logo Exchange

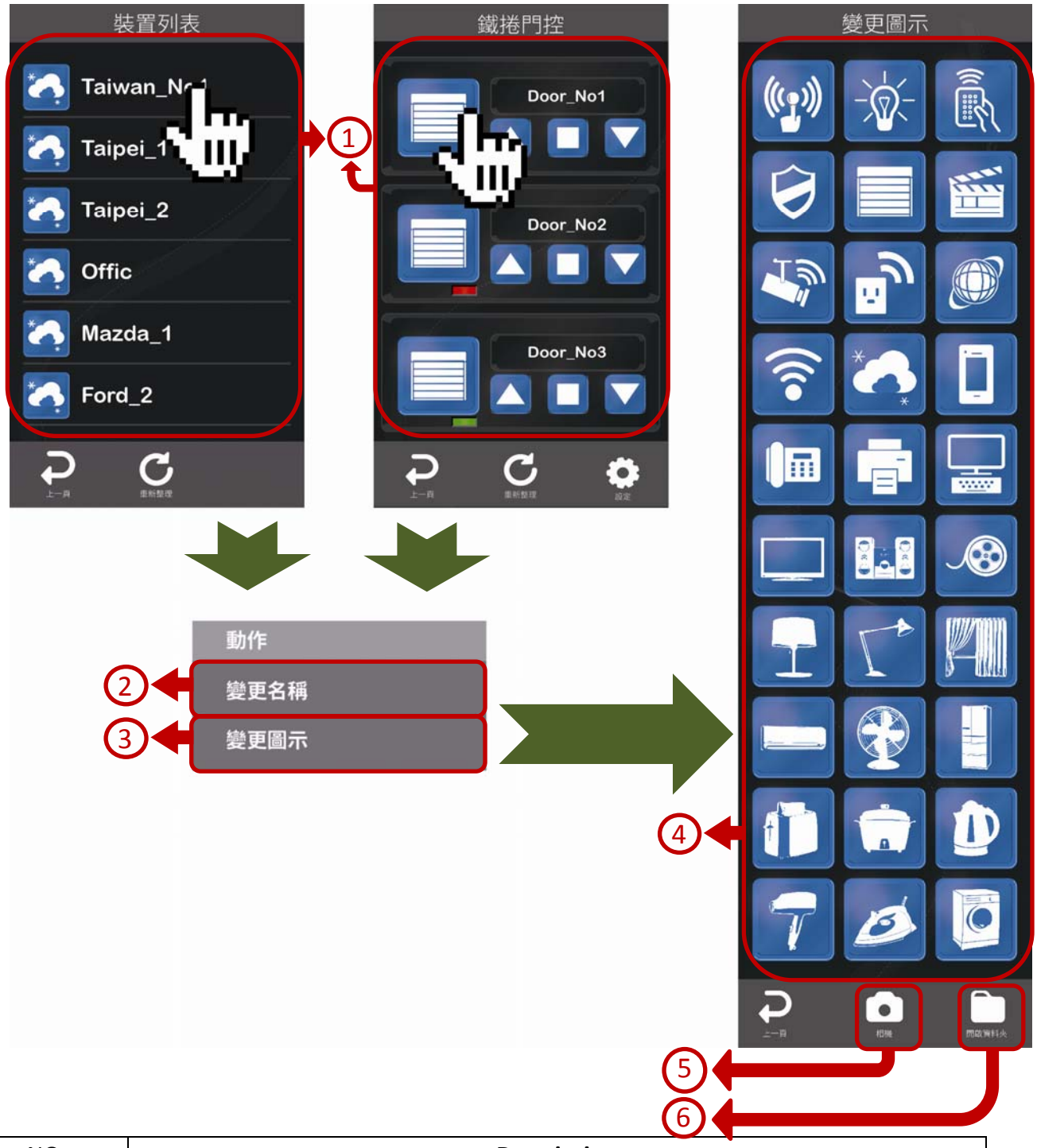

NO.	**Description**
1	Hold the Device List and Smart doorbell Icon for 2 seconds to exchange the name and icon logo
2	Change device name
3	Chang device icon(Note2)
4	Embedded Icon
5	Use your mobile camera to take pictures
6	Select the photos from device

Note 2:：UOI-RD02 do not support this function

1. Rolling Door Controller Operate Description

3-1 Rolling Door Controller

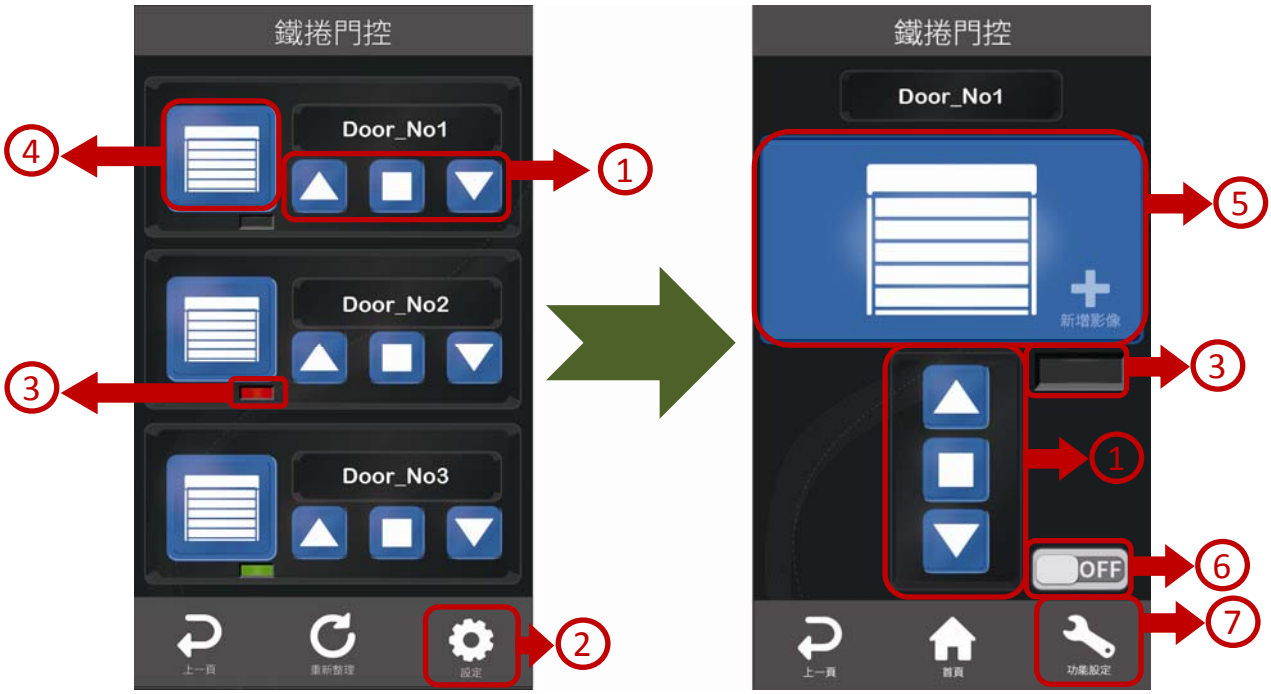

NO.	**Description**
1	Control the rolling door go UP/STOP/DOWN
2	Setting the connected device (See section 3-3)
3	Alarm display
4	Device image
5	Video display area(See section 4-2)
6	Relay Switching
7	Setup

3-2Video Settings

3-2-1 Video equipment within linking group

Press the icon about 3 sec, setting menu will show up

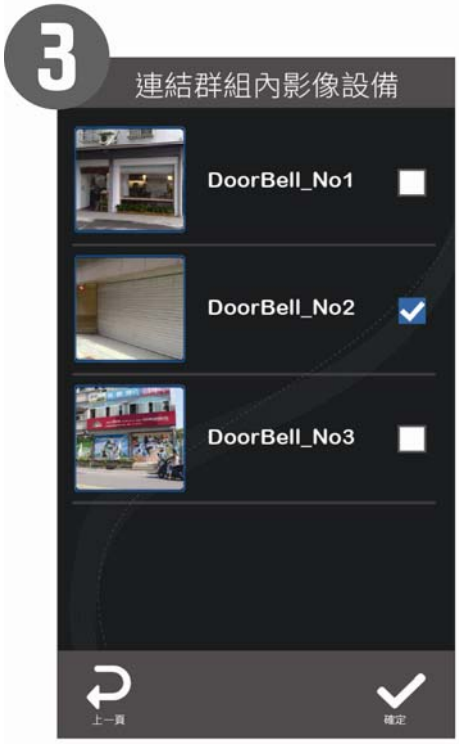

3-2-2 Connect IPCAMERA Equipment

3-2-3 DVR Connected Equipment

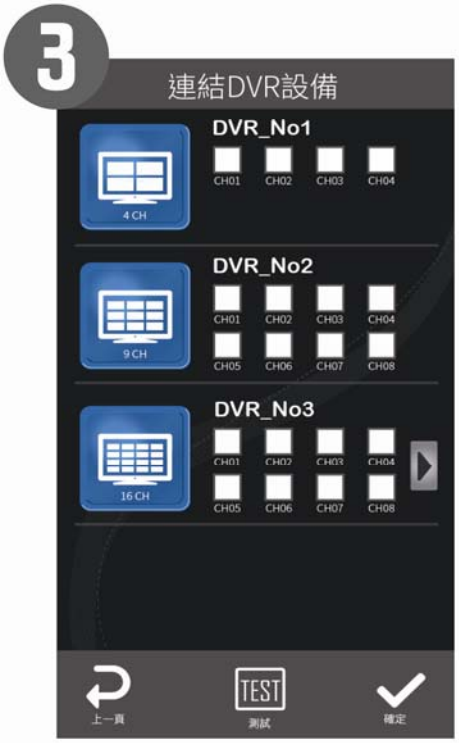

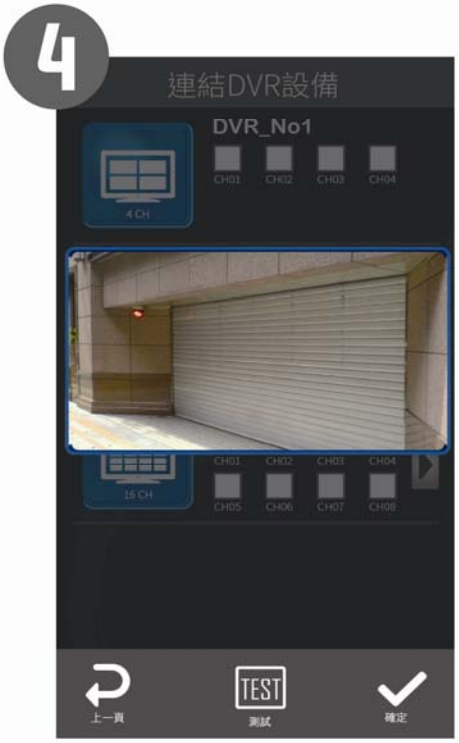

3-3Function Setting

No.	Desccription
1	Alarm Switching
2	Notifiction for N.O or N.C
3	RollingDoor Controller Version

低功率電波輻射性電機管理辦法

第十二條

型式認證合格之低功率射頻電機，非經許可，公司、商號或使用者均不得擅自變更頻率、加大功率或變更原設計之特性及功能。

第十四條

低功率射頻電機之使用不得影響飛航安全及干擾合法通信；經發現有干擾現象時，應立即停用，並改善至無干擾時方得繼續使用。

前項合法通信，指依電信法規定作業之無線電通信。

低功率射頻電機須忍受合法通信或工業、科學及醫療用電波輻射性電機設備之干擾。

FCC/IC Caution:

1. This device complies with Part 15 of the FCC rules/ Industry Canada licence-exempt RSS standard(s).
   Operation is subject to the following two conditions :
   1) this device may not cause harmful interference and
   2) this device must accept any interference received, including interference that may cause undesired operation.

2. This Transmitter must not be co-located or operating in conjunction with any other antenna or transmitter.

3. Any changes or modifications not expressly approved by the party responsible for compliance could void the user's authority to operate this equipment.

IMPORTANT NOTE : (For Mobile Device Configuration)

FCC Radiation Exposure Statement:
This equipment complies with FCC RF radiation exposure limits set forth for an uncontrolled environment.
This equipment should be installed and operated with a minimum distance of 20 centimeters between the radiator and your body.