T E S T R E P O R T
No.: 16-1-0180701T08a

According to:

FCC Regulations
Part 15.205
Part 15.207
Part 15.209
Part 15.247

for

Viessmann Werke GmbH & Co. KG

ViCare Thermostat

FCC ID: 2AIZ9-VT0318

Laboratory Accreditation and Listings		
DAkkS Deutsche Akkreditierungsstelle D-PL-12047-01-01 Accredited EMC-Test Laboratory	Industry Canada Reg. No.: 3462D-1 Reg. No.: 3462D-2 Reg. No.: 3462D-3	Voluntary Controls for Electromagnetic Emissions Reg. No.: R-20013, C-20009, T-20006, G-20013
Wi Fi ALLIANCE AUTHORIZED RF LABORATORY	ctia Authorized™ Test Lab Lab Code: 20011130-00	FCC FEDERAL COMMUNICATIONS COMMISSION USA MRA US-EU 0003
accredited according to DIN EN ISO/IEC 17025		

CETECOM GmbH
Laboratory Radio Communications & Electromagnetic Compatibility
Im Teelbruch 116 • 45219 Essen • Germany
Registered in Essen, Germany, Reg. No.: HRB Essen 8984
Tel.: + 49 (0) 20 54 / 95 19-954 • Fax: + 49 (0) 20 54 / 95 19-964
E-mail: info@cetecom.com • Internet: www.cetecom.com

The test results relate only to the individual items that have been tested. This report shall not be reproduced in parts without the written approval of the testing laboratory © Copyright: All rights reserved by CETECOM

Table of Contents

1. SUMMARY OF TEST RESULTS 3

1.1. Tests Measurement Overview According to US CFR Title 47, Subpart 15C 3

2. ADMINISTRATIVE DATA 5

2.1. Identification of the Testing Laboratory 5
2.2. Test Location 5
2.3. Organizational Items 5
2.4. Applicant's Details 5
2.5. Manufacturer's Details 5
2.6. Responsible for Technical Tests 5

3. EQUIPMENT UNDER TEST (EUT) 6

3.1. Certification Data of Main EUT declared by Applicant 6
3.2. WLAN 802.11b/g/n Technical Data of Main EUT as Declared by Applicant 7
3.3. EUT: Type, S/N etc. and Short Descriptions used in this Test Report 8
3.4. Auxiliary Equipment (AE): Type, S/N etc. and Short Descriptions 8
3.5. EUT Set-ups 9
3.6. EUT Operating Modes 9
3.7. Configuration of Cables Used for Testing 9

4. DESCRIPTION OF TEST SYSTEM SET-UP'S 10

4.1. Test System Set-Up for Conducted Measurements on Antenna Port 10
4.2. Test System Set-Up For Radiated Magnetic Field Measurements Below 30 MHz 12
4.3. Test System Set-Up For Radiated Electric Field Measurement 30 MHz To 1 GHz 13
4.4. Test System Set-Up For Radiated Electric Field Measurement Above 1 GHz 14
4.5. Test System Set-Up For AC Power-Line Conducted Emission Measurements 15

5. MEASUREMENTS 16

5.1. Duty-Cycle 16
5.2. RF Output Power (Conducted) 17
5.3. Power Spectral Density 21
5.4. 6 dB & 99% Bandwidth 23
5.5. 20 dBc Spurious Emissions (Conducted) 26
5.6. Radiated Field Strength Emissions Below 30 MHz 29
5.7. Radiated Field Strength Emissions 30 MHz - 1 GHz 32
5.8. Radiated Field Strength Emissions Above 1 GHz 34
5.9. Radiated Band-Edge Compliance 36
5.10. AC-Power Lines Conducted Emissions 39
5.11. Measurement Uncertainties 40

6. ABBREVIATIONS USED IN THIS REPORT 41

7. ACCREDITATION DETAILS OF CETECOM'S LABORATORIES AND TEST SITES 41

8. INSTRUMENTS AND ANCILLARY 42

9. VERSIONS OF TEST REPORTS (CHANGE HISTORY) 45

Table of Annex

Annex No.	Contents	Reference Description	Total Pages
Annex 1	Test Results	**CETECOM-TR16-1-0180701T08a-A1**	82
Annex 2	External Photographs of EUT	**CETECOM-TR16-1-0180701T08a-A2**	10
Annex 3	Internal Photographs of EUT	**CETECOM-TR16-1-0180701T08a-A3**	6
Annex 4	Test Set-Up Photographs	**CETECOM-TR16-1-0180701T08a-A4**	12
The listed attachments are an integral part of this report.			

1. Summary of Test Results

The test results apply exclusively to the test samples as presented in this Report. The CETECOM GmbH does not assume responsibility for any conclusions and generalizations taken in conjunction with other specimens or samples of the type of the item presented to tests.

The test results apply exclusively to the test samples as presented in this report. The CETECOM GmbH does not assume responsibility for any conclusions and generalizations taken in conjunction with other specimens or samples of the type of the item presented to tests. Also we refer on special conditions which the applicant should fulfill according §2.927 to §2.948, special focus regarding modification of the equipment and availability of sample equipment for market surveillance tests.

The presented Equipment Under Test(in this report, hereinafter referred as EUT) : **ViCare Thermostat** supports following technologies : **2.4 GHz RF Transceiver Modes.**

EUT supported Technologies which are not tested within this test report

EUT supported Technology	Test Report Reference
ZigBee: 2405 – 2480 MHz	CETECOM-TR16-1-0180701T09a

EUT supported Technologies which are tested within this test report

- **WLAN 802.11b/g/n(HT20) Modes: 2412 – 2462 MHz**

Following test cases have been performed to show compliance with valid Part 15.205/15.207/15.209/15.247 of the FCC CFR Title 47 Rules, Edition 4th November 2016.

1.1. Tests Measurement Overview According to US CFR Title 47, Subpart 15C

Test cases	Port	References and Limits		EUT set-up	EUT op. mode	Result
		FCC Standard	Test limit			
Intentional Radiator → WLAN 802.11b/g/n(HT20) Modes: 2412 MHz– 2462 MHz						
Timing Of Transmitter (Pulsed Operation) + Duty Cycle	Antenna terminal (conducted)	§15.35 + ANSI C63.10:2013	No Limit Criteria	1	1	**PERFORMED** for Information only
6 dB Bandwidth	Antenna terminal (conducted)	§15.247(a)(2)	≥ 500 kHz for DTS systems	1	1	**PASS**
99% Occupied Bandwidth	Antenna terminal (conducted)	2.1049(h)	99% Power bandwidth	1	1	**PERFORMED** for Information only
Transmitter Frequency Stability	Antenna terminal (conducted)	--	Operation within designated operational band	--	--	**NOT PERFORMED**
Transmitter Peak Output Power	Antenna terminal (conducted)	§15.247(b)(3)	1 W (Peak) (for Antenna Gain < 6 dBi)	1	1	**PASS**
Transmitter Peak Output Power EIRP	Antenna terminal (conducted + Antenna Gain	§15.247(b)(4)	< 4 Watt EIRP (for Antenna Gain < 6 dBi) if Antenna directional Gain > 6dBi reduction of Max. power by the amount in dB that the directional gain of the antenna exceeds 6 dBi	1	1	**PASS**
Power Spectral Density	Antenna terminal (conducted)	§15.247(e)	8dBm/3kHz Band (for Antenna Gain < 6 dBi) if Antenna directional Gain > 6dBi reduction of Max. power spectral density by the amount in dB that the directional gain of the antenna exceeds 6 dBi	1	1	**PASS**

Out-Of-Band RF- emissions + Band-Edge emissions	Antenna terminal (conducted)	§15.247 (d)	≥ 20 dBc/100 kHz Bandwidth	1	1	**PASS**
General field strength emissions within restricted bands + Band-Edge compliance radiated	Enclosure + Inter-connecting cables (radiated)	§15.247 (d)	≥ 20 dBc/100 kHz Bandwidth	2	1	**PASS**
		§15.205 + §15.209	Restricted band limits + General field strength limits			
AC-Power Lines Conducted Emissions	AC-Power lines or Battery Charger	§15.207(a)	AC Power line conducted limits	2	1	**PASS**

Remark 1) :--

RF-Exposure Evaluation (separation distance user to RF-radiating element greater 20cm)						
Test cases	**Port**	**References & Limits**		**EUT set-up**	**EUT op. mode**	**Result**
		FCC Standard	**Test Limit**			
Radio Frequency Radiation Exposure Requirements	Cabinet + Inter-connecting cables (radiated)	§2.1091 §2.1093 + KDB 865664 D02 RF Exposure Reporting v01r02	**RF-Field Strength Limits:** for Devices Used by the General Public **(Uncontrolled Environment)**	--	--	Refer test report CETECOM GmbH Test report no.: - CETECOM-TR16-1-0180701T10a

.....
Dipl.-Ing. Rachid Acharkaoui
Responsible for test section

.....
M.Sc. Ajit Phadtare
Responsible for test report

2. Administrative Data

2.1. Identification of the Testing Laboratory

Company name:	CETECOM GmbH
Address:	Im Teelbruch 116 45219 Essen - Kettwig Germany
Responsible for testing laboratory:	Dipl.-Ing. Rachid Acharkaoui
Deputy:	Dipl.-Ing. Niels Jeß

2.2. Test Location

2.2.1. Test laboratory "CTC"

Company name:	see chapter 2.1. Identification of the Testing Laboratory

2.3. Organizational Items

Responsible for test report and Project leader:	M.Sc. Ajit Phadtare
Receipt of EUT:	2017-07-26
Date(s) of test:	2017-08-05 to 2017-10-03
Date of report:	2017-10-06

Version of template: 13.02

2.4. Applicant's Details

Applicant's name:	Viessmann Werke GmbH & Co. KG
Address:	Viessmannstraße 1 35108 Allendorf (Eder) GERMANY
Contact:	+49 (0) 6452 700

2.5. Manufacturer's Details

Manufacturer's name:	PRETTL Electronics GmbH
Address:	Robert-Bosch Str.10 01454 Radeberg GERMANY
Contact :	+49 (0) 3528 456 233

2.6. Responsible for Technical Tests

Company name:	ithinx GmbH
Address:	Butzweilerhof Allee 4 50829 Cologne GERMANY
Contact Person :	Mr. Stefan Peuse
Contact Details :	+49 (0) 221 99589421 |stefan.peuse@ithinx.io

3. Equipment Under Test (EUT)

3.1. Certification Data of Main EUT declared by Applicant

EUT Model	**ViCare Thermostat**		
EUT Model Type	**--**		
EUT Applications	**Wall mounted Thermostat for home applications**		
FCC ID	**2AIZ9-VT0318**		
Additional Information: Onboard WLAN 2.4 GHz Chip			
Onboard WLAN 2.4 GHz Chip	**Murata LBEP5CLWTC-631**		
Chip Certification FCC ID	**Not Certified**		
Number of Integrated Chips	**1**		
sAdditional Information : Supported Technologies			
Technology	**Modes**	**Frequency Range**	**Remarks**
WLAN 2.4 GHz	**WLAN 802.11b/g/n(HT20)**	**2412 MHz – 2462 MHz**	refer chapter 3.2
ZigBee 2.4 GHz	**ZigBee 2.4 GHz**	**2405 MHz – 2480 MHz**	not tested under this report

3.2. WLAN 802.11b/g/n Technical Data of Main EUT as Declared by Applicant

EUT Model	**ViCare Thermostat**		
EUT Model Type	--		
EUT Applications	**Wall mounted Thermostat for home applications**		
Hardware Version	**Rev.C**		
Software Version	**STM32: (V1.40.09), EFR32:(Nodetest) Linux: (V0.1.7)**		
Frequency (USA Bands)	2412 MHz to 2462 MHz		
Frequency | Channel | B.W. (USA Bands)	WLAN 2.4 GHz 802.11b (SISO)	☒ Ch 1 | 2 | 3| 4 | 5 | 6 | 7 ☒ Ch. 8| 9| 10 | 11	☒ Bandwidth 20 MHz
	WLAN 2.4 GHz 802.11g (SISO)	☒ Ch 1 | 2 | 3| 4 | 5 | 6 | 7 ☒ Ch. 8| 9| 10 | 11	☒ Bandwidth 20 MHz
	WLAN 2.4 GHz 802.11n (SISO)	☒ Ch 1 | 2 | 3| 4 | 5 | 6 | 7 ☒ Ch. 8| 9| 10 | 11	☒ Bandwidth 20 MHz
Channels Power Settings	According to Applicant's Declaration Max. Rated Power Values (see below)		
802.11b – Mode DSSS Modulation | Data Rates | **Power Settings**	☒ DBPSK | 1 Mbps : **20 dBm** ☒ DQPSK | 2 Mbps : **20 dBm** ☒ CCK-PBCC | 5.5 Mbps: **20 dBm** ☒ CCK-PBCC | 11 Mbps: **20 dBm**		
802.11g – Mode OFDM Modulation | Data Rates **Power Settings**	☒ BPSK | 6 Mbps / 9 Mbps : **20 dBm** ☒ QPSK | 12 Mbps / 18 Mbps: **20 dBm** ☒ 16-QAM | 24 Mbps / 36 Mbps: **20 dBm** ☒ 64-QAM | 48 Mbps / 54 Mbps : **20 dBm**		
802.11n – Mode OFDM Modulation | Data Rates **Power Settings**	☒ HT20(MCS0 to MCS7) 7.2 / 14.4 / 21.7 / 28.9 / 43.3 / 57.8 / 65 / 72.2 Mbps : **20 dBm**		
Antenna Type	Onboard WLAN 2.4 GHz PCB Antenna		
Antenna Gain (Peak)	**-2 dBi** (2400 MHz – 2500 MHz) (According to Applicant's Declaration)		
Total Number of Chip	1 (WLAN 2.4 GHz System On-Chip)		
Total Number of Antennas	1 | Onboard WLAN 2.4 GHz PCB Antenna: used for WLAN 2.4 GHz		
Test Mode Settings Software	Smart Thermostat WiFi & ZigBee Test V1.2		
Power Supply	☒ External AC/DC Adapter: 5 VDC using AC/DC-µUSB Adapter AC/DC-µUSB Adapter: PHIHONG Technology|Model:PSM10R-050 Input:100-240V 50-60 Hz 0.3A | Output: 5V 2.0 A Max		
	☒ External DC Power Supply:12 V DC (using DC Power Cable)		
Current Consumption	500mA (12V)		
EUT Dimensions	100 x 100 x 30 mm		
EUT Weight	250 gm		
Special EMI Components	--		
EUT Sample Type	☒ Production	☐ Pre-Production	☐ Engineering
Operational Conditions	Temperature: 0 °C to+50°C	Humidity: 10% to 90% (noncondensing)	
Firmware	☐ for normal use	☒ Special version for test execution	
FCC label attached	☐ Yes	☒ No	

For further details refer Applicants Declaration & following technical documents		
Description of Reference Document (supplied by applicant)	Version	Total Pages
Kurzanleitung RF Testsoftware Smart Thermostat	Rev: 1 Date: 14/06/2017	9

3.3. EUT: Type, S/N etc. and Short Descriptions used in this Test Report

Short Descrip-tion*)	EUT	Type	Serial Number	Hardware Status	Software Status
EUT A	ViCare Thermostat	--	#21	Rev.C	STM32: (V1.40.09), EFR32:(Nodetest) Linux: (V0.1.7)
EUT B	ViCare Thermostat	--	#22	Rev.C	STM32: (V1.40.09), EFR32:(Nodetest) Linux: (V0.1.7)

*) EUT short description is used to simplify the identification of the EUT in this test report.

3.4. Auxiliary Equipment (AE): Type, S/N etc. and Short Descriptions

AE short descrip-tion *)	Auxiliary Equipment	Type	S/N serial number	HW hardware status	SW software status
AE 1	AC/DC µUSB Adapter	MODEL: PSM10R-050 INPUT: 100-240V AC 0.3A 50-60 Hz OUTPUT: 5V DC 2.0A Max	P161700930A1	Length: 1.55m	--
AE 2	Open Therm Loop Cable	Shielded	--	Length: 12 m	--
AE 3	12 V DC Power Cable	Shielded	--	Length: 3.1 m	--
AE 4	µUSB- USB Cable	Shielded	--	Length: 2.5 m	--
AE 5	Test Laptop CTC522013	DELL Latitude E6430	GB3WXY1		Windows 7 Professional (64 Bit) + Smart Thermostat WiFi & ZigBee Test V1.2
	Test Laptop Charger	MODEL: LA65NS2-01 INPUT: 100-240V AC 1.6A 50-60Hz OUTPUT: 19.5 V DC	CN-06TM1C-72438	P/N: 6TM1C	

*) AE short description is used to simplify the identification of the auxiliary equipment in this test report.

3.5. EUT Set-ups

EUT set-up no.*)	Combination of EUT and AE	Remarks
set. 1	**EUT A + AE 4 +AE 5** [AE 5: was only used to activate test mode using test software]	**Conducted Measurements** [WLAN 2.4 GHz Connector losses are corrected in measurements] [Unused ZigBee 2.4 GHz Connector was terminated using 50 Ω during WLAN 2.4 GHz measurements]
set. 2	**EUT B + AE 1 + AE 2 + AE 3 (+ AE 5)** [AE 5: was only used to activate test mode using test software & was kept out of the test chamber during tests]	**Radiated Measurements** **AC-Power Lines Emissions** [In order to simulate worst case EUT B was supplied with 12 V DC & with 5 V DC via AC/DC µUSB Adapter during WLAN 2.4 GHz measurements]

*) EUT set-up no. is used to simplify the identification of the EUT set-up in this test report.

3.6. EUT Operating Modes

EUT operating mode no.*1)	Description of operating modes	Additional information
op. 1	TX-Fixed Channel (Modulated) WLAN 2.4 GHz 802.11b/g/n(HT20) Modes*	For WLAN 2.4 GHz 802.11b/g/n(HT20) SISO Modes tests are carried out with different Modes| Channels | Modulation | Data Rate combinations with help of Smart Thermostat WiFi & ZigBee Test V1.2 Software The EUT was put to **Fixed Channel (Modulated) Continuous transmissions mode** with help of Smart Thermostat WiFi & ZigBee Test V1.2 Software **(Channel Type | Channel Frequency)** **Lowest Channel :1: 2412 MHz** **Middle Channel :6: 2437 MHz** **Highest Channel:13: 2472 MHz** **Channel Power Settings b Mode** **Worst Case Data Rate 11 Mbps : +20 dBm** **Channel Power Settings g Mode** **Worst Case Data Rate 12 Mbps : +20 dBm** **Channel Power Settings n(HT20) Mode** **Worst Case Data Rate MCS2: +20 dBm** *Other supported wireless technologies were put in idle mode using special test software

3.7. Configuration of Cables Used for Testing

Cable number	Description	Connections	Cable length
Cable 1	--	--	--

4. Description of Test System Set-Up's

4.1. Test System Set-Up for Conducted Measurements on Antenna Port

Conducted Set-up W1

Conducted RF-Setup 1

General description:

The EUT's RF-signal is coupled out by a suitable antenna coupling connector (1). The signal is first attenuated (2) then connected to the power meter (3) for conducted power measurements. The specific attenuation loss is determined prior to the measurement within a set-up attenuation measurement. These are then taken into account by correcting the measurement readings.

Schematic:

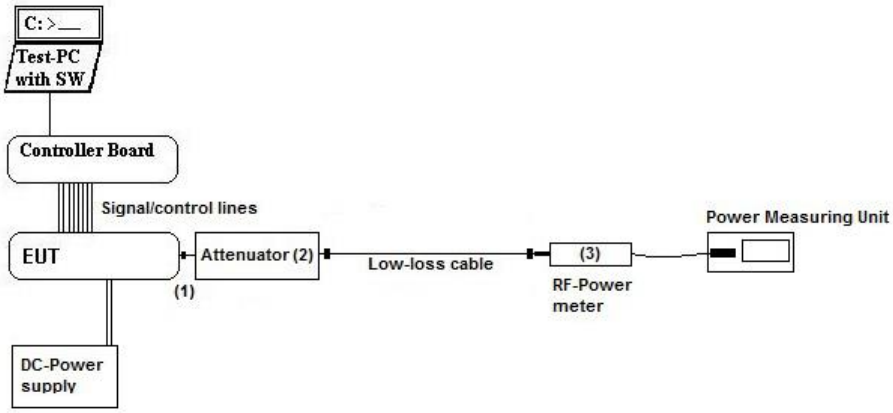

Testing method:

ANSI C63.10:2013,
KDB 558074 D01 DTS Meas.Guidance v04

Used Equipment

Passive Elements	Test Equipment	Remark:
☒ 10 dB Attenuator	☒ Power Meter	See List of equipment under each test case and chapter 6 for calibration info
☒ Low loss RF-cables	☒ DC-Power Supply	
☒	☒ Spectrum-Analyser	

Measurement uncertainty

See chapter 5.11

Conducted Set-up W2

Conducted RF-Setup 2

General description:

The EUT's RF-signal is coupled out by a suitable antenna coupling connector (1). The signal is first attenuated (2) then connected to spectrum-analyzer (4) for RF-conducted measurements. The specific attenuation loss is determined prior to the measurement within a set-up attenuation measurement. These are then taken into account by correcting the measurement readings of the spectrum-analyzer.

Schematic:

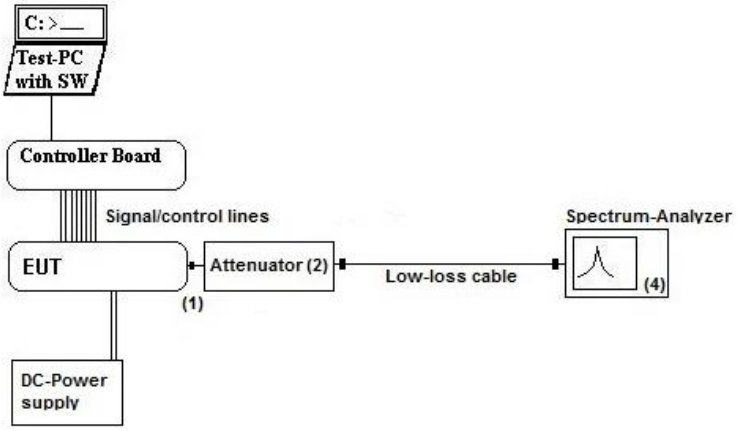

Testing method:

ANSI C63.10:2013,
KDB 558074 D01 DTS Meas.Guidance v04

Used Equipment

Passive Elements	Test Equipment	Remark:
☒ 10 dB Attenuator ☒ Low loss RF-cables	☒ Power Meter ☒ DC-Power Supply ☒ Spectrum-Analyser	See List of equipment under each test case and chapter 6 for calibration info

Measurement uncertainty

See chapter 5.11

4.2. Test System Set-Up For Radiated Magnetic Field Measurements Below 30 MHz

Specification: ANSI C63.4-2014 §5.3, §8.2.1, §8.3.1.1+§8.3.2.1 , ANSI C63.10-2013 chapter 6.4 (§6.4.4.2)

General Description: Evaluating the radiated field emissions are done first by an exploratory emission measurement and a final measurement for most critical frequencies determined.

The loop antenna was placed at 1 m height above ground plane and 3 m measurement distance from set-up for investigations. Because of reduced measurement distance, correction data were applied, as stated in chapter "General Limit - Radiated field strength emissions below 30 MHz". The tests are performed in the semi anechoic room recognized by the regulatory commission.

Schematic:

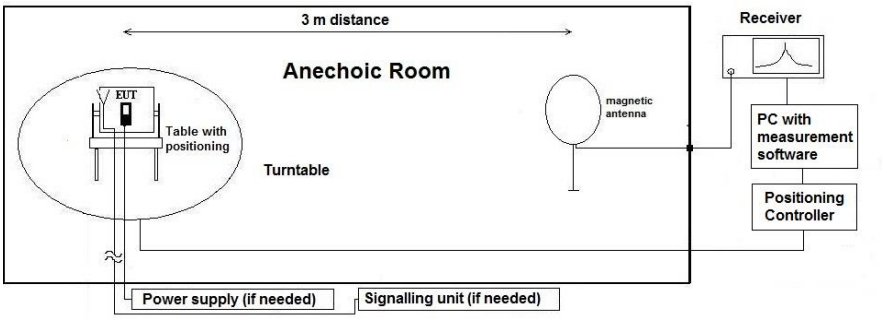

Testing method:

Exploratory, preliminary measurement
The EUT and it's associated accessories are placed on a non-conductive position manipulator (tipping device) of 0.8 m height which is placed on the turntable. By rotating the turntable (step 90°, range 0°to 360°) and the EUT itself either on 3-orthogonal axis (portable equipment) or 2-orthogonal axis (defined operational position of EUT), the emission spectrum was recorded. The loop antenna was moved at least to 2-perpendicular axes (antenna vector in direction of EUT and parallel to EUT) in order to maximize the emissions. The results are documented in a diagram. Critical frequencies (low margin to limit) are saved within a data reduction table for further investigations. If various operating modes are supported, further investigations are made to find the worst-case. Also the interconnection cables and equipment position were varied in order to maximize the emissions.

Final measurement on critical frequencies
Based on the exploratory measurements, the most critical frequencies are re-measured by maintaining the EUT's worst-case operation mode, cable position, etc.

First a frequency zoom around the critical frequency is done to locate the frequency more precisely. After this step, for all identified critical frequencies, the maximum peak was determined.

Following parameters were varied: the turntable angle continuously in the range 0 to 360 degree, the EUT itself either over 3-orthogonal axis (not defined usage position) or 2-orthogonal axis (defined usage position).

On the determined worst-case position, a final measurement with necessary bandwidth and detector according standard has been carried out.

Formula:

$E_C = E_R + AF + C_L + D_F - G_A$

$M = L_T - E_C$

AF =Antenna factor
C_L = Cable loss
D_F= Distance correction factor
E_C = Electrical field – corrected value
E_R = Receiver reading
G_A= Gain of pre-amplifier (if used)
L_T = Limit
M = Margin

All units are dB-units, positive margin means value is below limit.

Distance correction: Reference for applied correction (extrapolating) factors due to reduced measurement distance:
ANSI C63.10:2013, §6.4.4.2 - Equations (2) + (3) + (4)

4.3. Test System Set-Up For Radiated Electric Field Measurement 30 MHz To 1 GHz

Specification: ANSI C63.4-2014 chapter 8.2.3, ANSI C63.10-2013 chapter 6.5

General Description: Evaluating the field emissions have to be done first by an exploratory emissions measurement and a final measurement for most critical frequencies. The tests are performed in a NSA-compliant semi anechoic room (SAR) recognized by the regulatory commissions.

Schematic:

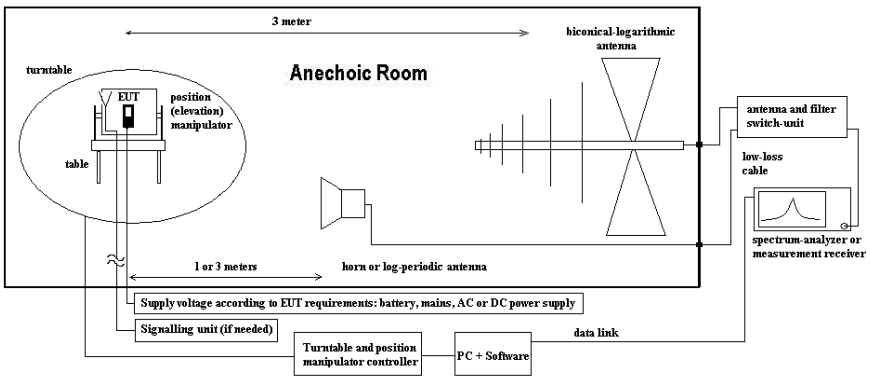

Testing method:

Exploratory, preliminary measurements
The EUT and its associated accessories are placed on a non-conductive position manipulator (tipping device) of 0.8 m height which is placed on the turntable. By rotating the turntable (range 0° to 360°, step 90°) and the EUT itself either on 3-orthogonal axis (portable equipment) or 2-orthogonal axis (defined operational position of EUT) the emission spectrum and it's characteristics was recorded with an EMI-receiver, broadband antenna and software.

Measurement antenna: horizontal and vertical, heights: 1,0 m and 1,82 m as worst-case determined by an exploratory emission measurements. The results are documented in a diagram. Critical frequencies (low margin to limit) are saved within a table for further investigations. If various operating modes are supported, further investigations are made to find the worst-case of them. Also the interconnection cables and equipment position were varied in order to maximize the emissions.

Final measurement on critical frequencies
Based on the exploratory measurements, the most critical frequencies are re-measured by maintaining the EUT's worst-case operation mode, cable position, etc. either on 10m OATS or 3m semi-anechoic room.

First a frequency zoom around the critical frequency is done to locate the frequency more precisely. After this step, for all identified critical frequencies, the maximum peak was determined.

Following parameters were varied: the turntable angle continuously in the range 0 to 360 degree, the EUT itself either over 3-orthogonal axis (not defined usage position) or 2-orthogonal axis (defined usage position). The measurement antenna height between 1 m and 4 m.

On the determined worst-case position, a final measurement with necessary bandwidth and detector according standard has been carried out.

Formula:

$E_C = E_R + AF + C_L + D_F - G_A$ (1)

$M = L_T - E_C$ (2)

AF = Antenna factor
C_L = Cable loss
D_F = Distance correction factor (if used)
E_C = Electrical field – corrected value
E_R = Receiver reading
G_A = Gain of pre-amplifier (if used)
L_T = Limit
M = Margin

All units are dB-units, positive margin means value is below limit.

4.4. Test System Set-Up For Radiated Electric Field Measurement Above 1 GHz

Specification: ANSI C63.4-2014 chapter 8.3, ANSI C63.10-2013 chapter 6.6.3.3 & 6.6.4

General Description: Evaluating the emissions have to be done first by an exploratory emissions measurement and a final measurement for most critical frequencies. The tests are performed in a CISPR 16-1-4:2010 compliant fully anechoic room (FAR) recognized by the regulatory commission. The measurement distance was set to 3 meter for frequencies up to 18 GHz and 2 meter above 18 GHz. A logarithmic periodic antenna is used for the frequency range 30 MHz to 1 GHz. Horn antennas are used for frequency range 1 GHz to 40 GHz. The EUT is aligned within 3 dB beam width of the measurement antenna with three orthogonal axis measurements on the EUT.

Schematic:

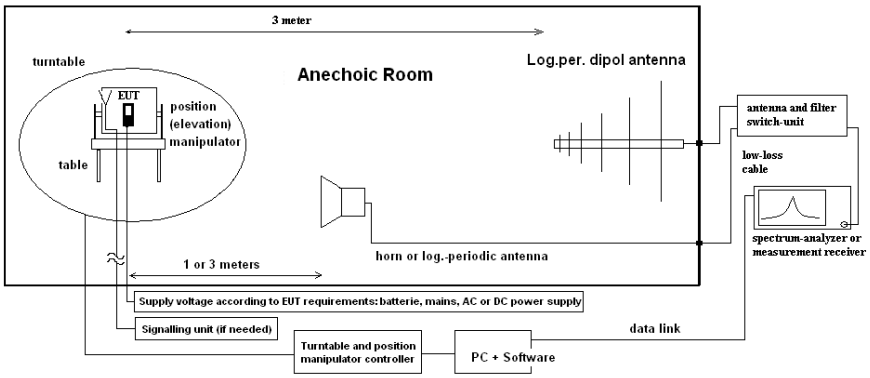

Testing method:

Exploratory, preliminary measurements
The EUT and its associated accessories are placed on a non-conductive position manipulator (tipping device) of 1.55 m height which is placed on the turntable. By rotating the turntable (range 0° to 360°, step 15°) and the EUT itself either on 3-orthogonal axis (portable equipment) or 2-orthogonal axis (defined operational position of EUT) the emission spectrum and it's characteristics was recorded with an EMI-receiver, broadband antenna and software.
The measurements are performed in horizontal and vertical polarization of the measurement antennas. The results are documented in a diagram. Critical frequencies (low margin to limit) are saved within a table for further investigations. If various operating modes are supported, further investigations are made to find the worst-case of them. Also the interconnection cables and equipment position were varied in order to maximize the emissions.

Final measurement on critical frequencies
Based on the exploratory measurements, the most critical frequencies are re-measured by maintaining the EUT's worst-case operation mode, cable position, etc.

First a frequency zoom around the critical frequency is done to locate the frequency more precisely. After this step, for all identified critical frequencies, the maximum peak was determined. Following parameters were varied: the turntable angle continuously in the range 0 to 360 degree, the EUT itself over 3-orthogonal axis and the height for EUT with large dimensions.

On the determined worst-case position, a final measurement with necessary bandwidth and detector according standard has been carried out.
On the determined worst-case position, a final measurement with necessary bandwidth and detector according standard has been carried out.

Formula:

$E_C = E_R + AF + C_L + D_F - G_A$ (1)

$M = L_T - E_C$ (2)

E_C = Electrical field – corrected value
E_R = Receiver reading
M = Margin
L_T = Limit
AF = Antenna factor
C_L = Cable loss
D_F = Distance correction factor (if used)
G_A = Gain of pre-amplifier (if used)

All units are dB-units, positive margin means value is below limit.

4.5. Test System Set-Up For AC Power-Line Conducted Emission Measurements

Specification: ANSI C63.4-2014 chapter 7, ANSI C63.10-2013chapter 6.2

General Description: The radio frequency voltage conducted back into the AC power line in the frequency range 150 kHz to 30 MHz has to be investigated. Compliance should be tested by measuring the radio frequency voltage between each power line and ground at the power terminals in the stated frequency range.
A 50 Ohm / 50 µH line impedance stabilization network (LISN) is used coupling the interface to the measurement equipment. The EUT power input leads are connected through the LISN to the AC-power source. The LISN enclosure is electrically connected to the ground plane. The measuring instrument is connected to the coaxial output of the LISN.
Tabletop devices were set-up on a 80 cm height above reference ground plane, floor standing equipment 10 cm raised above ground plane. Measurements have been performed on each phase line and neutral line of the devices AC-power lines. The EUT was power supplied with 110 V/60 Hz. The EUT was tested in the defined operating mode and installed (connected) to accessory equipment according the general description of use given by the applicant.

Schematic:

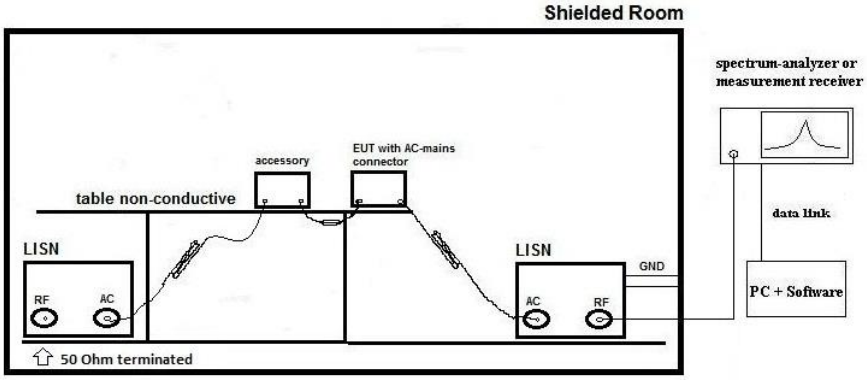

Only schematic view, we refer to figure 6, 7 and 8 of ANSI C63.4-2009 for more details.

Testing method:

Exploratory, preliminary measurements as a first step, determines the worst-case phase line (neutral or phase) as well as the most critical operating mode of the equipment. A complete frequency-sweep with PK-Detector is performed on each current-carrying conductor.

Final testing for power phases and critical frequencies (Margin to AV- or QP limit lower than 3 dB) as a second step includes measurements with receivers detector set to Quasi-Peak and Average.

Formula:

$V_C = V_R + C_L$ (1)

$M = L_T - V_C$ (2)

V_C = measured Voltage –corrected value
V_R = Receiver reading
C_L = Cable loss
M = Margin
L_T = Limit

Values are in dB, positive margin means value is below limit.

5. Measurements

5.1. Duty-Cycle

5.1.1. Test location and equipment (for reference numbers please see chapter 'List of test equipment')

Ambient Climatic conditions		Temperature: (22±2)°C		Rel. humidity: (45±15)%		
test site	☐ 441 EMI SAR	☐ 348 EMI cond.	☐ 443 EMI FAR	☒ 347 Radio.lab.	☐ 337 OATS	☐
equipment	☐ 331 HC 4055	☐ 396 Thermo	☐	☐	☐	☐
spectr. analys.	☐ 584 FSU	☐ 598 FSEM	☐ 264 FSEK	☒ 611 TS8997	☒ 683 FSU 26	☐
antenna meas	☐ 574 BTA-L	☐ 289 CBL 6141	☐ 608 HL 562	☐ 133 EMCO3115	☐ 302 BBHA9170	☐
antenna meas	☐ 123 HUF-Z2	☐ 132 HUF-Z3	☐ 030 HFH-Z2	☐	☐	☐
antenna subst	☐ 071 HUF-Z2	☐ 020 EMCO3115	☐ 063 LP 3146	☐ 303 BBHA9170	☐	☐
power meter	☐ 009 NRV	☐ 010 URV5-Z2	☐ 011 URV5-Z2	☒ 611 TS8997	☐	☐
Signalgener.	☐ 008 SMG	☐ 140 SMHU	☐ 263 SMP04	☐	☐	☐
power meter	☐ 262 NRV-S	☐ 266 NRV-Z31	☐ 265 NRV-Z33	☐ 261 NRV-Z55	☐ 356 NRV-Z1	☐
multimeter	☐ 341 Fluke 112	☐	☐	☐	☐	☐
DC power	☐ 086 LNG50-10	☐ 087 EA3013	☐ 354 NGPE 40	☐ 349 car battery	☐ 350 Car battery	☐ Integrated battery
line voltage	☒ 120 V AC/ 60 Hz via public mains		☐ 060 24 V DC	☐		
otherwise	☐	☐ K4 Cable				

Method of Measurement:	☒ conducted		☐ radiated
Maximum Rated Conducted Output Power :	**b Mode : 20 dBm**	**g Mode: 20 dBm**	**n Mode: 20 dBm**
Single Antenna Assembly Gain (G):	**-2 dBi**		
Beamforming Gain (Y):	0 dBi		
Duty-Cycle Factor:	Near 100% (test purposes only)		

A special firmware program is used for test purposes. In contrast to normal operating mode a higher duty-cycle is set in order to facilitate the measurements. This is maximized at the extent possible.
The necessary duty-cycle correction factor is determined on nominal conditions on channel for all modes. It is assumed that no noticeable changes occur when tested on other channels or climatic conditions.

5.1.2. Duty-Cycle Results:

DUTY-CYCLE Measurement		
Set-up No.: 1		Op. Mode: 1
WLAN 2.4 GHz	**Duty Cycle** $x = \frac{Tx_{on}}{Tx_{on} + Tx_{off}} * 100$	**Duty Cycle Correction-Factor: 100log(1/DC)**
Worst Case Data Rate Remark 1	(%)	(dB)
WLAN 2.4 GHz b-Mode| B.W. 20 MHz | SISO | Ch 11 (2462 MHz)		
11 MBit	**82.15**	**0.85**
WLAN 2.4 GHz g-Mode| B.W. 20 MHz | SISO | Ch 11 (2462 MHz)		
12 MBit	**69.90**	**1.56**
WLAN 2.4 GHz n-Mode| B.W. 20 MHz | SISO | Ch 11 (2462 MHz)		
MCS2	**63.23**	**1.99**
Remark 1: For further details please refer → **Annex 1: Test results CETECOM-TR16-1-0180701T08a-A1**		

5.1.3. Duty-Cycle Verdict:

☒ The results were corrected in order to evaluate for worst-case result each time when average values are necessary for example average radiated emissions or similar
☐ No correction necessary: Duty-Cycle > 98%

5.2. RF Output Power (Conducted)

5.2.1. Test location and equipment (for reference numbers please see chapter 'List of test equipment')

Ambient Climatic conditions		Temperature: (22±2)°C		Rel. humidity: (45±15)%		
test site	☐ 441 EMI SAR	☐ 348 EMI cond.	☐ 443 EMI FAR	☒ 347 Radio.lab.	☐ 337 OATS	☐
equipment	☐ 331 HC 4055	☐ 396 Thermo	☐	☐	☐	☐
spectr. analys.	☐ 584 FSU	☐ 598 FSEM	☐ 264 FSEK	☒ 611 TS8997	☒ 683 FSU 26	☐
antenna meas	☐ 574 BTA-L	☐ 289 CBL 6141	☐ 608 HL 562	☐ 133 EMCO3115	☐ 302 BBHA9170	☐
antenna meas	☐ 123 HUF-Z2	☐ 132 HUF-Z3	☐ 030 HFH-Z2	☐	☐	☐
antenna subst	☐ 071 HUF-Z2	☐ 020 EMCO3115	☐ 063 LP 3146	☐ 303 BBHA9170	☐	☐
power meter	☐ 009 NRV	☐ 010 URV5-Z2	☐ 011 URV5-Z2	☒ 611 TS8997	☐	☐
Signalgener.	☐ 008 SMG	☐ 140 SMHU	☐ 263 SMP04	☐	☐	☐
power meter	☐ 262 NRV-S	☐ 266 NRV-Z31	☐ 265 NRV-Z33	☐ 261 NRV-Z55	☐ 356 NRV-Z1	☐
multimeter	☐ 341 Fluke 112	☐	☐	☐	☐	☐
DC power	☐ 086 LNG50-10	☐ 087 EA3013	☐ 354 NGPE 40	☐ 349 car battery	☐ 350 Car battery	☐ Integrated battery
line voltage	☒ 120 V AC/ 60 Hz via public mains		☐ 060 24 V DC	☐		
otherwise	☒ K4 Cable		☒530 10dB Attenuator			

5.2.2. Requirements & Limits:

FCC	☒ §15.247(b) (3) (4)
ANSI	☒ C63.10-2013
KDB Guidance no.	☒ KDB 558074 D01 DTS Meas.Guidance v04 ☐ KDB 662911 D01 Multiple Transmitter Output v02r01 (MIMO, Smart-antenna)
Limits	☒ **Frequency Band 2400-2483.5 MHz** ☒ **Digital Modulation Techniques System:** **maximum conducted power shall not exceed 1 W if Antenna Gain < 6 dBi** if Antenna Gain > 6 dBi maximum conducted output power shall be reduced by the amount in dB that the directional gain of the antenna exceeds 6 dBi if MIMO Antennas: directional Antenna Array Gain = 10 log (No. Antennas) + Highest Antenna Gain amongst total Antennas

5.2.3. RF Output Power (Peak)Verification Results: WLAN 2.4 GHz b/g/n(HT20) Modes+20 dBm

WLAN 802.11b/g/n(HT20)						
Conducted Power Measurements (using RF Peak Power Meter) [dBm]						20 dBm
b-Mode (SISO)		Channel No. (Frequency MHz)			b-Mode (SISO) Maximum Conducted Value	b-Mode (SISO) Antenna Gain [dBi]
Data rate	Modulation	1 (2412)	6 (2437)	11 (2462)		
1MBit	DBPSK	16,52	16,89	16,76	17,67	-2,00
2Mbit	DQPSK	16,37	16,69	16,90		
5.5Mbit	CCK-PBCC	16,21	16,91	16,61		
11MBit	ERP-PBCC	13,29	17,67	13,14		
FCC15.247 Conducted Peak Power Limits + Antenna Gain Requirement					30.0 dBm	< 6 dBi
g-Mode (SISO)		Channel No. (Frequency MHz)			g-Mode (SISO) Maximum Conducted Value	g-Mode (SISO) Antenna Gain [dBi]
Data rate	Modulation	1 (2412)	6 (2437)	11 (2462)		
6Mbit	BPSK	13,25	17,66	13,53	17,83	-2,00
9Mbit	BPSK	13,29	17,74	12,99		
12Mbit	QPSK	13,30	17,83	13,62		
18Mbit	QPSK	13,31	17,42	13,59		
24Mbit	16-QAM	13,41	16,69	13,83		
36Mbit	16-QAM	13,65	16,08	13,85		
48Mbit	64-QAM	13,58	15,55	14,04		
54MBit	64-QAM	13,32	17,00	13,67		
FCC15.247 Conducted Peak Power Limits + Antenna Gain Requirement					30.0 dBm	< 6 dBi
247		Channel No. (Frequency MHz)			n(HT20)-Mode (SISO) Maximum Conducted Value	n(HT20)-Mode (SISO) Antenna Gain [dBi]
Data rate	Modulation	1 (2412)	6 (2437)	11 (2462)		
MCS0 -6.5Mbps	BPSK	13,46	17,14	13,72	17,42	-2,00
MCS1 - 13Mbps	QPSK	13,53	17,26	13,73		
MCS2 - 19.5Mbps	QPSK	13,68	17,42	14,02		
MCS3 - 26Mbps	QAM16	13,74	16,75	13,94		
MCS4 -39Mbps	QAM16	13,66	16,12	13,95		
MCS5 - 52MBps	QAM64	13,75	15,70	14,11		
MCS6 - 58.5MBps	QAM64	13,78	14,50	14,15		
MCS7 - 65MBps	QAM64	13,80	14,96	14,26		
FCC15.247 Conducted Peak Power Limits + Antenna Gain Requirement					30.0 dBm	< 6 dBi

For each mode data rate giving Maximum output power (Worst Case) has been found using power verification The measurements are then performed with these Maximum output power (Worst Case) Data rates.

Worst Case Data Rate b Mode → 11 Mbps: 17.67 dBm

Worst Case Data Rate g Mode → 12 Mbps: 17.83 dBm

Worst Case Data Rate n(HT20)→ MCS2: 17.42 dBm

5.2.4. RF Output Power (Peak) & Antenna Gain Requirements Verdict: Compliant

5.2.5. RF Output Power (Peak) Measurement Settings:

Method of Measurement:	☒ conducted	☐ radiated	
Maximum Rated Conducted Output Power :	**b Mode : 20 dBm**	**g Mode: 20 dBm**	**n Mode: 20 dBm**
Single Antenna Assembly Gain (G):	**-2 dBi**		
Beamforming Gain (Y):	0 dBi		
Duty-Cycle Factor:	Refer Chapter 5.1		
KDB Guidance:	KDB 558074 D01 DTS Meas.Guidance v04		
Power Measurement Type:	Bandwidth Integration using Spectrum Analyzer		

5.2.6. RF Output Power (Peak) Results:

Test Settings Mode| B.W.| Data Rate | Channel Power Settings **b Mode SISO | 20 MHz | 11 Mbps | +20 dBm** **TX-Fixed Channel (Modulated)**				
Test conditions: (Set. 1, Op. 1)		**RF Peak Output Power (Conducted) [dBm]**		
		Lowest Channel Channel No.1 2412 MHz	Middle Channel Channel No. 6 2437 MHz	Highest Channel Channel No. 11 2462 MHz
T_{NOM}= 20 °C	V_{NOM}= 5 V DC (using AE 5 via AE 4)	**23.53**	**23.60**	**23.55**
Remark 1: For further details please refer → **Annex 1: Test results CETECOM-TR16-1-0180701T08a-A1**				

Test Settings Mode| B.W.| Data Rate | Channel Power Settings **g Mode SISO | 20 MHz | 12 Mbps | +20 dBm** **TX-Fixed Channel (Modulated)**				
Test conditions: (Set. 1, Op. 1)		**RF Peak Output Power (Conducted) [dBm]**		
		Lowest Channel Channel No.1 2412 MHz	Middle Channel Channel No. 6 2437 MHz	Highest Channel Channel No. 11 2462 MHz
T_{NOM}= 20 °C	V_{NOM}= 5 V DC (using AE 5 via AE 4)	**20.59**	**25.13**	**20.85**
Remark 1: For further details please refer → **Annex 1: Test results CETECOM-TR16-1-0180701T08a-A1**				

Test Settings Mode| B.W.| Data Rate | Channel Power Settings **n Mode SISO | 20 MHz | MCS2 | +20 dBm** **TX-Fixed Channel (Modulated)**				
Test conditions: (Set. 1, Op. 1)		**RF Peak Output Power (Conducted) [dBm]**		
		Lowest Channel Channel No.1 2412 MHz	Middle Channel Channel No. 6 2437 MHz	Highest Channel Channel No. 11 2462 MHz
T_{NOM}= 20 °C	V_{NOM}= 5 V DC (using AE 5 via AE 4)	**20.84**	**24.67**	**21.10**
Remark 1: For further details please refer → **Annex 1: Test results CETECOM-TR16-1-0180701T08a-A1**				

5.2.7. RF Output Power (Peak) Verdict: Compliant

5.2.8. RF Output Power (RMS) Measurement Settings:

Method of Measurement:	☒ conducted	☐ radiated	
Maximum Rated Conducted Output Power :	**b Mode : 20 dBm**	**g Mode: 20 dBm**	**n Mode: 20 dBm**
Single Antenna Assembly Gain (G):	**-2 dBi**		
Beamforming Gain (Y):	0 dBi		
Duty-Cycle Factor:	Refer Chapter 5.1		
KDB Guidance:	KDB 558074 D01 DTS Meas.Guidance v04		
Power Measurement Type:	Bandwidth Integration using Spectrum Analyzer		

5.2.9. RF Output Power (RMS) Results:

Test Settings Mode| B.W.| Data Rate | Channel Power Settings **b Mode SISO | 20 MHz | 11 Mbps | +20 dBm** **TX-Fixed Channel (Modulated)**				
Test conditions: (Set. 1, Op. 1)		**RF RMS Output Power (Conducted) [dBm]**		
		Lowest Channel Channel No.1 2412 MHz	Middle Channel Channel No. 6 2437 MHz	Highest Channel Channel No. 11 2462 MHz
T_{NOM}= 20 °C	V_{NOM}= 5 V DC (using AE 5 via AE 4)	**16.1**	**16.1**	**16.1**
Remark 1: For further details please refer → **Annex 1: Test results CETECOM-TR16-1-0180701T08a-A1** Remark 2: Values are calculated with Duty Cycle Correction Factor.				

Test Settings Mode| B.W.| Data Rate | Channel Power Settings **g Mode SISO | 20 MHz | 12 Mbps | +20 dBm** **TX-Fixed Channel (Modulated)**				
Test conditions: (Set. 1, Op. 1)		**RF RMS Output Power (Conducted) [dBm]**		
		Lowest Channel Channel No.1 2412 MHz	Middle Channel Channel No. 6 2437 MHz	Highest Channel Channel No. 11 2462 MHz
T_{NOM}= 20 °C	V_{NOM}= 5 V DC (using AE 5 via AE 4)	**11.4**	**16.1**	**11.5**
Remark 1: For further details please refer → **Annex 1: Test results CETECOM-TR16-1-0180701T08a-A1** Remark 2: Values are calculated with Duty Cycle Correction Factor.				

Test Settings Mode| B.W.| Data Rate | Channel Power Settings **n Mode SISO | 20 MHz | MCS2 | +20 dBm** **TX-Fixed Channel (Modulated)**				
Test conditions: (Set. 1, Op. 1)		**RF RMS Output Power (Conducted) [dBm]**		
		Lowest Channel Channel No.1 2412 MHz	Middle Channel Channel No. 6 2437 MHz	Highest Channel Channel No. 11 2462 MHz
T_{NOM}= 20 °C	V_{NOM}= 5 V DC (using AE 5 via AE 4)	**11.3**	**15.6**	**12.0**
Remark 1: For further details please refer → **Annex 1: Test results CETECOM-TR16-1-0180701T08a-A1** Remark 2: Values are calculated with Duty Cycle Correction Factor.				

5.2.10. RF Output Power (RMS) Verdict: Compliant

5.3. Power Spectral Density

5.3.1. Test location and equipment (for reference numbers please see chapter 'List of test equipment')

Ambient Climatic conditions		Temperature: (22±2)°C		Rel. humidity: (45±15)%		
test site	☐ 441 EMI SAR	☐ 348 EMI cond.	☐ 443 EMI FAR	☒ 347 Radio.lab.	☐ 337 OATS	☐
equipment	☐ 331 HC 4055	☐ 396 Thermo	☐	☐	☐	☐
spectr. analys.	☐ 584 FSU	☐ 598 FSEM	☐ 264 FSEK	☒ 611 TS8997	☒ 683 FSU 26	☐
antenna meas	☐ 574 BTA-L	☐ 289 CBL 6141	☐ 608 HL 562	☐ 133 EMCO3115	☐ 302 BBHA9170	☐
antenna meas	☐ 123 HUF-Z2	☐ 132 HUF-Z3	☐ 030 HFH-Z2	☐	☐	☐
antenna subst	☐ 071 HUF-Z2	☐ 020 EMCO3115	☐ 063 LP 3146	☐ 303 BBHA9170	☐	☐
power meter	☐ 009 NRV	☐ 010 URV5-Z2	☐ 011 URV5-Z2	☒ 611 TS8997	☐	☐
Signalgener.	☐ 008 SMG	☐ 140 SMHU	☐ 263 SMP04	☐	☐	☐
power meter	☐ 262 NRV-S	☐ 266 NRV-Z31	☐ 265 NRV-Z33	☐ 261 NRV-Z55	☐ 356 NRV-Z1	☐
multimeter	☐ 341 Fluke 112	☐	☐	☐	☐	☐
DC power	☐ 086 LNG50-10	☐ 087 EA3013	☐ 354 NGPE 40	☐ 349 car battery	☐ 350 Car battery	☐ Integrated battery
line voltage	☒ 120 V AC/ 60 Hz via public mains		☐ 060 24 V DC	☐		
otherwise	☐ K4 Cable		☐530 10dB Attenuator			

5.3.2. Requirements & Limits:

FCC	☒ §15.247(e)
ANSI	☒ C63.10-2013
KDB Guidance no.	☒ KDB 558074 D01 DTS Meas.Guidance v04 ☐ KDB 662911 D01 Multiple Transmitter Output v02r01 (MIMO, Smart-antenna)
Limits	☒ **Frequency Band 2400-2483.5 MHz** ☒ **Digital Modulation Techniques System:** **maximum conducted power spectral density shall not be greater than 8 dBm in any 3 kHz band if Antenna Gain < 6 dBi** if Antenna Gain > 6 dBi maximum conducted power spectral density shall be reduced by the amount in dB that the directional gain of the antenna exceeds 6 dBi if MIMO Antennas: directional Antenna Array Gain = 10 log (No. Antennas) + Highest Antenna Gain amongst total Antennas

5.3.3. Power Spectral Density (Peak) Measurement Settings:

Method of Measurement:	☒ conducted	☐ radiated	
Maximum Rated Conducted Output Power:	**b Mode : 20 dBm**	**g Mode: 20 dBm**	**n Mode: 20 dBm**
Single Antenna Assembly Gain (G):	**-2 dBi**		
Beamforming Gain (Y):	0 dBi		
Duty-Cycle Factor:	Refer Chapter 5.1		
KDB Guidance:	KDB 558074 D01 DTS Meas.Guidance v04		
Power Measurement Type:	Bandwidth Integration using Spectrum Analyzer		
Center Frequency	Nominal channel frequency		
Span	5..30% higher than the EBW measured before		
Resolution Bandwidth (RBW)	> 3 kHz (at least 3 times RBW) - pls. see diagram		
Video Bandwidth (VBW)	> 10 kHz - pls. see diagram		
Sweep time	coupled		
Detector	Peak, Max hold mode for method PKPSD or RMS method AVGPSD		
Sweep Mode	Repetitive mode, allow trace to stabilize (PKPSD) or single (AVGPSD)		
Addition of correction factors	external measuring set-up path-loss		

5.3.4. Power Spectral Density (Peak) Results:

Test Settings Mode| B.W.| Data Rate | Channel Power Settings **b Mode SISO | 20 MHz | 11 Mbps | +20 dBm** **TX-Fixed Channel (Modulated)**				
Test conditions: (Set. 1, Op. 1)		**Power Spectral Density (Peak) [dBm/3 kHz]**		
		Lowest Channel Channel No.1 2412 MHz	Middle Channel Channel No. 6 2437 MHz	Highest Channel Channel No. 11 2462 MHz
T_{NOM}= 20 °C	V_{NOM}= 5 V DC (using AE 5 via AE 4)	**-16.75**	**-16.65**	**-16.36**
Remark 1: For further details please refer → **Annex 1: Test results CETECOM-TR16-1-0180701T08a-A1**				

Test Settings Mode| B.W.| Data Rate | Channel Power Settings **g Mode SISO | 20 MHz | 12 Mbps | +20 dBm** **TX-Fixed Channel (Modulated)**				
Test conditions: (Set. 1, Op. 1)		**Power Spectral Density (Peak) [dBm/3 kHz]**		
		Lowest Channel Channel No.1 2412 MHz	Middle Channel Channel No. 6 2437 MHz	Highest Channel Channel No. 11 2462 MHz
T_{NOM}= 20 °C	V_{NOM}= 5 V DC (using AE 5 via AE 4)	**-23.66**	**-18.69**	**-23.17**
Remark 1: For further details please refer → **Annex 1: Test results CETECOM-TR16-1-0180701T08a-A1**				

Test Settings Mode| B.W.| Data Rate | Channel Power Settings **n Mode SISO | 20 MHz | MCS2 | +20 dBm** **TX-Fixed Channel (Modulated)**				
Test conditions: (Set. 1, Op. 1)		**Power Spectral Density (Peak) [dBm/3 kHz]**		
		Lowest Channel Channel No.1 2412 MHz	Middle Channel Channel No. 6 2437 MHz	Highest Channel Channel No. 11 2462 MHz
T_{NOM}= 20 °C	V_{NOM}= 5 V DC (using AE 5 via AE 4)	**-19.94**	**-16.33**	**-19.74**
Remark 1: For further details please refer → **Annex 1: Test results CETECOM-TR16-1-0180701T08a-A1**				

5.3.5. Power Spectral Density (Peak) Verdict: Compliant

5.4. 6 dB & 99% Bandwidth

5.4.1. Test location and equipment (for reference numbers please see chapter 'List of test equipment')

Ambient Climatic conditions		Temperature: (22±2)°C		Rel. humidity: (45±15)%		
test site	☐ 441 EMI SAR	☐ 348 EMI cond.	☐ 443 EMI FAR	☒ 347 Radio.lab.	☐ 337 OATS	☐
equipment	☐ 331 HC 4055	☐ 396 Thermo	☐	☐	☐	☐
spectr. analys.	☐ 584 FSU	☐ 598 FSEM	☐ 264 FSEK	☒ 611 TS8997	☒ 683 FSU 26	☐
antenna meas	☐ 574 BTA-L	☐ 289 CBL 6141	☐ 608 HL 562	☐ 133 EMCO3115	☐ 302 BBHA9170	☐
antenna meas	☐ 123 HUF-Z2	☐ 132 HUF-Z3	☐ 030 HFH-Z2	☐	☐	☐
antenna subst	☐ 071 HUF-Z2	☐ 020 EMCO3115	☐ 063 LP 3146	☐ 303 BBHA9170	☐	☐
power meter	☐ 009 NRV	☐ 010 URV5-Z2	☐ 011 URV5-Z2	☒ 611 TS8997	☐	☐
Signalgener.	☐ 008 SMG	☐ 140 SMHU	☐ 263 SMP04	☐	☐	☐
power meter	☐ 262 NRV-S	☐ 266 NRV-Z31	☐ 265 NRV-Z33	☐ 261 NRV-Z55	☐ 356 NRV-Z1	☐
multimeter	☐ 341 Fluke 112	☐	☐	☐	☐	☐
DC power	☐ 086 LNG50-10	☐ 087 EA3013	☐ 354 NGPE 40	☐ 349 car battery	☐ 350 Car battery	☐ Integrated battery
line voltage	☒ 120 V AC/ 60 Hz via public mains		☐ 060 24 V DC	☐		
otherwise	☒ K4 Cable		☒530 10dB Attenuator			

5.4.2. Requirements & Limits:

FCC	☒ §15.247(a)(2)
ANSI	☒ C63.10-2013
KDB Guidance no.	☒ KDB 558074 D01 DTS Meas.Guidance v04 ☐ KDB 662911 D01 Multiple Transmitter Output v02r01 (MIMO, Smart-antenna)
Limits	☒ **Frequency Band 2400-2483.5 MHz** ☒ **Digital Modulation Techniques System:** **minimum 6 dB bandwidth shall be at least 500 kHz**

5.4.3. 6 dB & 99% Bandwidth Measurement Settings:

Method of Measurement:	☒ conducted	☐ radiated	
Maximum Rated Conducted Output Power:	**b Mode : 20 dBm**	**g Mode: 20 dBm**	**n Mode: 20 dBm**
Single Antenna Assembly Gain (G):	**-2 dBi**		
Beamforming Gain (Y):	0 dBi		
Duty-Cycle Factor:	Refer Chapter 5.1		
KDB Guidance:	KDB 558074 D01 DTS Meas.Guidance v04		
Measurement Type:	Spectrum Analyzer		
Center Frequency	Nominal channel frequency		
Span	2 x EBW of the Signal		
Resolution Bandwidth (RBW)	≥ 100 kHz		
Video Bandwidth (VBW)	≥ 3 x RBW		
Sweep time	Coupled		
Detector	Peak		
Trace Mode	Max Hold		
Sweep Mode	Auto couple		
Addition of correction factors	external measuring set-up path-loss		
Bandwidth Measurements	Measure the maximum width of the emission that is constrained by the frequencies associated with the two outermost amplitude points (upper and lower frequencies) that are attenuated by 6 dB relative to the maximum level measured in the fundamental emission. / Measurement function X dB with X set to 6 dB, Employ 99% OBW functions		

5.4.4. 6 dB Bandwidth Results:

Test Settings Mode| B.W.| Data Rate | Channel Power Settings **b Mode SISO | 20 MHz | 11 Mbps | +20 dBm** **TX-Fixed Channel (Modulated)**				
Test conditions: (Set. 1, Op. 1)		**6 dB Bandwidth [MHz]**		
		Lowest Channel Channel No.1 2412 MHz	Middle Channel Channel No. 6 2437 MHz	Highest Channel Channel No. 11 2462 MHz
T_{NOM}= 20 °C	V_{NOM}= 5 V DC (using AE 5 via AE 4)	**11.20**	**10.50**	**11.30**
Remark 1: For further details please refer → **Annex 1: Test results CETECOM-TR16-1-0180701T08a-A1**				

Test Settings Mode| B.W.| Data Rate | Channel Power Settings **g Mode SISO | 20 MHz | 12 Mbps | +20 dBm** **TX-Fixed Channel (Modulated)**				
Test conditions: (Set. 1, Op. 1)		**6 dB Bandwidth [MHz]**		
		Lowest Channel Channel No.1 2412 MHz	Middle Channel Channel No. 6 2437 MHz	Highest Channel Channel No. 11 2462 MHz
T_{NOM}= 20 °C	V_{NOM}= 5 V DC (using AE 5 via AE 4)	**15.40**	**15.40**	**15.40**
Remark 1: For further details please refer → **Annex 1: Test results CETECOM-TR16-1-0180701T08a-A1**				

Test Settings Mode| B.W.| Data Rate | Channel Power Settings **n Mode SISO | 20 MHz | MCS2 | +20 dBm** **TX-Fixed Channel (Modulated)**				
Test conditions: (Set. 1, Op. 1)		**6 dB Bandwidth [MHz]**		
		Lowest Channel Channel No.1 2412 MHz	Middle Channel Channel No. 6 2437 MHz	Highest Channel Channel No. 11 2462 MHz
T_{NOM}= 20 °C	V_{NOM}= 5 V DC (using AE 5 via AE 4)	**15.60**	**15.60**	**15.60**
Remark 1: For further details please refer → **Annex 1: Test results CETECOM-TR16-1-0180701T08a-A1**				

5.4.5. 6 dB Bandwidth Verdict: Compliant

5.4.6. 99% Bandwidth Results:

Test Settings Mode| B.W.| Data Rate | Channel Power Settings **b Mode SISO | 20 MHz | 11 Mbps | +20 dBm** **TX-Fixed Channel (Modulated)**				
Test conditions: (Set. 1, Op. 1)		**99% Bandwidth [MHz]**		
		Lowest Channel Channel No.1 2412 MHz	Middle Channel Channel No. 6 2437 MHz	Highest Channel Channel No. 11 2462 MHz
T_{NOM}= 20 °C	V_{NOM}= 5 V DC (using AE 5 via AE 4)	**14.26**	**14.64**	**11.30**
Remark 1: For further details please refer → **Annex 1: Test results CETECOM-TR16-1-0180701T08a-A1**				

Test Settings Mode| B.W.| Data Rate | Channel Power Settings **g Mode SISO | 20 MHz | 12 Mbps | +20 dBm** **TX-Fixed Channel (Modulated)**				
Test conditions: (Set. 1, Op. 1)		**99% Bandwidth [MHz]**		
		Lowest Channel Channel No.1 2412 MHz	Middle Channel Channel No. 6 2437 MHz	Highest Channel Channel No. 11 2462 MHz
T_{NOM}= 20 °C	V_{NOM}= 5 V DC (using AE 5 via AE 4)	**16.72**	**20.36**	**16.76**
Remark 1: For further details please refer → **Annex 1: Test results CETECOM-TR16-1-0180701T08a-A1**				

Test Settings Mode| B.W.| Data Rate | Channel Power Settings **n Mode SISO | 20 MHz | MCS2 | +20 dBm** **TX-Fixed Channel (Modulated)**				
Test conditions: (Set. 1, Op. 1)		**99% Bandwidth [MHz]**		
		Lowest Channel Channel No.1 2412 MHz	Middle Channel Channel No. 6 2437 MHz	Highest Channel Channel No. 11 2462 MHz
T_{NOM}= 20 °C	V_{NOM}= 5 V DC (using AE 5 via AE 4)	**17.84**	**19.58**	**17.80**
Remark 1: For further details please refer → **Annex 1: Test results CETECOM-TR16-1-0180701T08a-A1**				

5.4.7. 99% Bandwidth Verdict: Performed

5.5. 20 dBc Spurious Emissions (Conducted)

5.5.1. Test location and equipment (for reference numbers please see chapter 'List of test equipment')

Ambient Climatic conditions		Temperature: (22±2)°C		Rel. humidity: (45±15)%		
test site	☐ 441 EMI SAR	☐ 348 EMI cond.	☐ 443 EMI FAR	☒ 347 Radio.lab.	☐ 337 OATS	☐
equipment	☐ 331 HC 4055	☐ 396 Thermo	☐	☐	☐	☐
spectr. analys.	☐ 584 FSU	☐ 598 FSEM	☐ 264 FSEK	☐ 611 TS8997	☒ 683 FSU 26	☐
antenna meas	☐ 574 BTA-L	☐ 289 CBL 6141	☐ 608 HL 562	☐ 133 EMCO3115	☐ 302 BBHA9170	☐
antenna meas	☐ 123 HUF-Z2	☐ 132 HUF-Z3	☐ 030 HFH-Z2	☐	☐	☐
antenna subst	☐ 071 HUF-Z2	☐ 020 EMCO3115	☐ 063 LP 3146	☐ 303 BBHA9170	☐	☐
power meter	☐ 009 NRV	☐ 010 URV5-Z2	☐ 011 URV5-Z2	☐ 611 TS8997	☐	☐
Signalgener.	☐ 008 SMG	☐ 140 SMHU	☐ 263 SMP04	☐	☐	☐
power meter	☐ 262 NRV-S	☐ 266 NRV-Z31	☐ 265 NRV-Z33	☐ 261 NRV-Z55	☐ 356 NRV-Z1	☐
multimeter	☐ 341 Fluke 112	☐	☐	☐	☐	☐
DC power	☐ 086 LNG50-10	☐ 087 EA3013	☐ 354 NGPE 40	☐ 349 car battery	☐ 350 Car battery	☐ Integrated battery
line voltage	☒ 120 V AC/ 60 Hz via public mains		☐ 060 24 V DC	☐		
otherwise	☒ K4 Cable		☒530 10dB Attenuator			

5.5.2. Requirements & Limits:

FCC	☒ §15.247(d)
ANSI	☒ C63.10-2013
KDB Guidance no.	☒ KDB 558074 D01 DTS Meas.Guidance v04 ☐ KDB 662911 D01 Multiple Transmitter Output v02r01 (MIMO, Smart-antenna)
Limits	☒ **Frequency Band 2400-2483.5 MHz** ☒ **Digital Modulation Techniques System-Peak Conducted Power:** In any 100 kHz bandwidth outside the frequency band in which the digitally modulated intentional radiator is operating, the **radio frequency power that is produced by the intentional radiator shall be at least 20 dB below that in the 100 kHz bandwidth** within the band that contains the highest level of the desired power, based on either an RF conducted or a radiated measurement, provided the transmitter demonstrates compliance with the peak conducted power limits.

5.5.3. 20 dBc Spurious Emissions (Conducted) Measurement Settings:

Method of Measurement:	☒ conducted	☐ radiated	
Maximum Rated Conducted Output Power:	**b Mode : 20 dBm**	**g Mode: 20 dBm**	**n Mode: 20 dBm**
Single Antenna Assembly Gain (G):	**-2 dBi**		
Beamforming Gain (Y):	0 dBi		
Duty-Cycle Factor:	Refer Chapter 5.1		
KDB Guidance:	KDB 558074 D01 DTS Meas.Guidance v04		
Measurement Type:	Peak Conducted Power using Spectrum Analyzer		
Center Frequency	Nominal channel frequency		
Span	2 x EBW of the Signal		
Resolution Bandwidth (RBW)	100 kHz		
Video Bandwidth (VBW)	≥ 3 x RBW		
Sweep time	Coupled		
Detector	Max Peak		
Trace Mode	Max Hold		
Sweep Mode	Auto couple		
Addition of correction factors	external measuring set-up path-loss		
20 dBc Measurements	For an intentional radiator, the spectrum was investigated from the lowest radio frequency signal generated in the device, without going below 9 kHz, up to at least tenth harmonic (25 GHz) of the highest fundamental frequency. These Spurious Emissions are compared with limit values lower than 20dB related to the RF-carrier power value		

5.5.4. 20 dBc Spurious Emissions (Conducted) Results:

Test Settings Mode| B.W.| Data Rate | Channel Power Settings **b Mode SISO | 20 MHz | 11 Mbps | +20 dBm** **TX-Fixed Channel (Modulated)**				
Test conditions: (Set. 1, Op. 1)		**20 dBc Spurious Emissions (Conducted)**		
T_{NOM}= 20 °C	V_{NOM}= 5 V DC (using AE 5 via AE 4)	Lowest Channel Channel No.1 2412 MHz	Middle Channel Channel No. 6 2437 MHz	Highest Channel Channel No. 11 2462 MHz
In Band Carrier Power (Conducted) [dBm]		**8.15**	**8.40**	**8.23**
20 dBc Spurious Emissions Limits [dBc]		**-11.85**	**-11.60**	**-11.77**
150 kHz – 30 MHz Spurious Emissions [dBc]		**-36.07**	**-36.25**	**-36.73**
30 MHz – 2.8 GHz Spurious Emissions [dBc]		**-35.52**	**-35.35**	**-35.66**
2.8 GHz – 25 GHz Spurious Emissions [dBc]		**-33.07**	**-32.49**	**-32.29**
Remark 1: For further details please refer → **Annex 1: Test results CETECOM-TR16-1-0180701T08a-A1**				

Test Settings Mode| B.W.| Data Rate | Channel Power Settings **g Mode SISO | 20 MHz | 12 Mbps | +20 dBm** **TX-Fixed Channel (Modulated)**				
Test conditions: (Set. 1, Op. 1)		**20 dBc Spurious Emissions (Conducted)**		
T_{NOM}= 20 °C	V_{NOM}= 5 V DC (using AE 5 via AE 4)	Lowest Channel Channel No.1 2412 MHz	Middle Channel Channel No. 6 2437 MHz	Highest Channel Channel No. 11 2462 MHz
In Band Carrier Power (Conducted) [dBm]		**1.19**	**6.51**	**1.45**
20 dBc Spurious Emissions Limits [dBc]		**-18.81**	**-13.49**	**-18.55**
150 kHz – 30 MHz Spurious Emissions [dBc]		**-35.68**	**-35.56**	**-35.95**
30 MHz – 2.8 GHz Spurious Emissions [dBc]		**-35.58**	**-34.43**	**-35.16**
2.8 GHz – 25 GHz Spurious Emissions [dBc]		**-31.03**	**-32.07**	**-31.76**
Remark 1: For further details please refer → **Annex 1: Test results CETECOM-TR16-1-0180701T08a-A1**				

Test Settings Mode| B.W.| Data Rate | Channel Power Settings **n Mode SISO | 20 MHz | MCS2 | +20 dBm** **TX-Fixed Channel (Modulated)**				
Test conditions: (Set. 1, Op. 1)		**20 dBc Spurious Emissions (Conducted)**		
T_{NOM}= 20 °C	V_{NOM}= 5 V DC (using AE 5 via AE 4)	Lowest Channel Channel No.1 2412 MHz	Middle Channel Channel No. 6 2437 MHz	Highest Channel Channel No. 11 2462 MHz
In Band Carrier Power (Conducted) [dBm]		**1.72**	**6.25**	**1.81**
20 dBc Spurious Emissions Limits [dBc]		**-18.28**	**-13.75**	**-18.19**
150 kHz – 30 MHz Spurious Emissions [dBc]		**-36.11**	**-36.30**	**-35.61**
30 MHz – 2.8 GHz Spurious Emissions [dBc]		**-35.32**	**-35.06**	**-34.29**
2.8 GHz – 25 GHz Spurious Emissions [dBc]		**-32.46**	**-32.45**	**-32.06**
Remark 1: For further details please refer → **Annex 1: Test results CETECOM-TR16-1-0180701T08a-A1**				

5.5.5. 20 dBc Spurious Emissions (Conducted) Verdict: Compliant

5.6. Radiated Field Strength Emissions Below 30 MHz

5.6.1. Test location and equipment (for reference numbers please see chapter 'List of test equipment')

Ambient Climatic conditions			Temperature: (22±2)°C	Rel. humidity: (45±15)%		
test site	☒ 441 EMI SAR	☐ 348 EMI cond.	☐ 443 EMI FAR	☐ 347 Radio.lab.	☐ 337 OATS	☐ 487 SAR NSA
receiver	☐ 377 ESCS30	☒ 001 ESS				
Spectr. analys.	☐ 489 ESU 40	☐ 598 FSEM	☐ 264 FSEK	☐ 747 FSU 26	☐	☐
antenna meas	☐ 574 BTA-L	☐ 549 HL025	☐ 608 HL 562	☐ 133 EMCO3115	☐ 302 BBHA9170	☐ 376 BBHA9120E
antenna meas	☐ 123 HUF-Z2	☐ 132 HUF-Z3	☐ 030 HFH-Z2	☐	☐	☐
antenna subst	☐ 071 HUF-Z2	☒ 021 EMCO6502	☐ 063 LP 3146	☐ 303 BBHA9170	☐	☐
signaling	☐ 392 MT8820A	☐ 371 CBT32	☐ 547 CMU	☐ 594 CMW 500	☐ 371 CBT32	☐
otherwise	☐ 400 FTC40x15E	☐ 401 FTC40x15E	☐ 110 USB LWL	☐ 482 Filt. Matrix	☐ 378 RadiSense	
Signalgener.	☐ 008 SMG	☐ 140 SMHU	☐ 263 SMP04	☐	☐	☐
power meter	☐ 262 NRV-S	☐ 266 NRV-Z31	☐ 265 NRV-Z33	☐ 261 NRV-Z55	☐ 356 NRV-Z1	☐
DC power	☐ 086 LNG50-10	☐ 087 EA3013	☐ 354 NGPE 40	☐ 349 car battery	☐ 350 Car battery	☒ 671 EA3013S
line voltage	☒ 120 VAC 60 Hz public mains to AE 1		☒ 12 V DC via Laboratory Power Supply to AE 3			

5.6.2. Requirements & Limits:

FCC	Part 15, Subpart C, §15.205 & §15.209			
ANSI	C63.10-2013			
Frequency Range	**Field Strength Limit**		**Distance**	**Remarks**
[MHz]	**[µV/m]**	**[dBµV/m]**	**[m]**	
0.009 – 0.490	**2400/f (kHz)**	**67.6 – 20Log(f) (kHz)**	**300**	Correction factor used due to measurement distance of 3 m
0.490 – 1.705	**24000/f (kHz)**	**87.6 – 20Log(f) (kHz)**	**30**	Correction factor used due to measurement distance of 3 m
1.705 – 30	**30**	**29.5**	**30**	Correction factor used due to measurement distance of 3 m

5.6.3. Test Set-Up & Measurement Settings:

Signal link to test system (if used):		☐ air link	☐ cable connection	☒ none
EUT-grounding		☒ none	☐ with power supply	☐ additional connection
Equipment set up		☒ table top		☐ floor standing
Climatic conditions		Temperature: (22±3°C)		Rel. humidity: (40±20)%
EMI-Receiver or Analyzer Settings	Scan data	☒ 9 – 150 kHz RBW/VBW = 200 Hz Scan step = 80 Hz ☒ 150 kHz – 30 MHz RBW/VBW = 9 kHz Scan step = 4 kHz ☐ other:		
	Scan-Mode Detector Mode: Sweep-Time	☒ 6 dB EMI-Receiver Mode ☐ 3dB Spectrum analyser Mode Peak (pre-measurement) and Quasi-PK/Average (final if applicable) Repetitive-Scan, max-hold Coupled – calibrated display if continuous signal otherwise adapted to EUT's individual transmission duty-cycle		
General measurement procedures		Please see chapter "Test system set-up radiated magnetic field measurements below 30 MHz"		

5.6.4. Radiated Field Strength Emissions – 9 kHz to 30 MHz Results:

Radiated Field Strength Emissions – 9 kHz to 30 MHz								
T_{NOM}= 20 °C V_{NOM}= 5 V DC (using AE 1) + 12 V DC (using AE 3)		**Technology: WLAN 2.4 GHz 802.11b/g/n**		**TX-Fixed Channel (Modulated)**				
Diagram No. (Remark 1)	Test Settings Mode | B.W. | Data Rate | Channel (Frequency) | Channel Power		Set-up no.	OP-mode no.	Used detector			Verdict
					PK	AV	QP	
2.11	**b-Mode SISO| 20 MHz| 11 Mbps | Channel 1 (2412 MHz) | 20 dBm**		2	1	☒	☐	☐	**PASS**
2.12	**g-Mode SISO| 20 MHz| 12 Mbit| Channel 6 (2437 MHz) | 20 dBm**		2	1	☒	☐	☐	**PASS**
2.13	**n-Mode SISO|20 MHz| MCS2| Channel 11 (2462 MHz) | 20 dBm**		2	1	☒	☐	☐	**PASS**
Remark 1: For further details please refer → **Annex 1: Test results CETECOM-TR16-1-0180701T08a-A1**								

5.6.5. Correction factors due to reduced meas. distance (f< 30 MHz)

The used correction factors when the measurement distance is reduced compared to regulatory measurement distance, are calculated according Extrapolation formulas valid for EUT's with maximum dimension of 0.625xLambda. Formula 2+3+4 as presented in ANSI C63.10, Chapter 6.4.4 are used for the calculations of proper extrapolation factors.

Frequency -Range	f [kHz/MHz]	Lambda [m]	Far-Field Point [m]	Distance Limit accord. 15.209 [m]	1st Condition (dmeas< $D_{near-field}$)	2'te Condition (Limit distance bigger $d_{near-field}$)	Distance Correction accord. Formula
kHz	9,00E+03	33333,33	5305,17	300	fullfilled	not fullfilled	-80,00
	1,00E+04	30000,00	4774,65		fullfilled	not fullfilled	-80,00
	2,00E+04	15000,00	2387,33		fullfilled	not fullfilled	-80,00
	3,00E+04	10000,00	1591,55		fullfilled	not fullfilled	-80,00
	4,00E+04	7500,00	1193,66		fullfilled	not fullfilled	-80,00
	5,00E+04	6000,00	954,93		fullfilled	not fullfilled	-80,00
	6,00E+04	5000,00	795,78		fullfilled	not fullfilled	-80,00
	7,00E+04	4285,71	682,09		fullfilled	not fullfilled	-80,00
	8,00E+04	3750,00	596,83		fullfilled	not fullfilled	-80,00
	9,00E+04	3333,33	530,52		fullfilled	not fullfilled	-80,00
	1,00E+05	3000,00	477,47		fullfilled	not fullfilled	-80,00
	1,25E+05	2400,00	381,97		fullfilled	not fullfilled	-80,00
	2,00E+05	1500,00	238,73		fullfilled	fullfilled	-78,02
	3,00E+05	1000,00	159,16		fullfilled	fullfilled	-74,49
	4,00E+05	750,00	119,37		fullfilled	fullfilled	-72,00
	4,90E+05	612,24	97,44		fullfilled	fullfilled	-70,23
	5,00E+05	600,00	95,49	30	fullfilled	not fullfilled	-40,00
	6,00E+05	500,00	79,58		fullfilled	not fullfilled	-40,00
	7,00E+05	428,57	68,21		fullfilled	not fullfilled	-40,00
	8,00E+05	375,00	59,68		fullfilled	not fullfilled	-40,00
	9,00E+05	333,33	53,05		fullfilled	not fullfilled	-40,00
MHz	1,00	300,00	47,75		fullfilled	not fullfilled	-40,00
	1,59	188,50	30,00		fullfilled	not fullfilled	-40,00
	2,00	150,00	23,87		fullfilled	fullfilled	-38,02
	3,00	100,00	15,92		fullfilled	fullfilled	-34,49
	4,00	75,00	11,94		fullfilled	fullfilled	-32,00
	5,00	60,00	9,55		fullfilled	fullfilled	-30,06
	6,00	50,00	7,96		fullfilled	fullfilled	-28,47
	7,00	42,86	6,82		fullfilled	fullfilled	-27,13
	8,00	37,50	5,97		fullfilled	fullfilled	-25,97
	9,00	33,33	5,31		fullfilled	fullfilled	-24,95
	10,00	30,00	4,77		fullfilled	fullfilled	-24,04
	10,60	28,30	4,50		fullfilled	fullfilled	-23,53
	11,00	27,27	4,34		fullfilled	fullfilled	-23,21
	12,00	25,00	3,98		fullfilled	fullfilled	-22,45
	13,56	22,12	3,52		fullfilled	fullfilled	-21,39
	15,00	20,00	3,18		fullfilled	fullfilled	-20,51
	15,92	18,85	3,00		fullfilled	fullfilled	-20,00
	17,00	17,65	2,81		not fullfilled	fullfilled	-20,00
	18,00	16,67	2,65		not fullfilled	fullfilled	-20,00
	20,00	15,00	2,39		not fullfilled	fullfilled	-20,00
	21,00	14,29	2,27		not fullfilled	fullfilled	-20,00
	23,00	13,04	2,08		not fullfilled	fullfilled	-20,00
	25,00	12,00	1,91		not fullfilled	fullfilled	-20,00
	27,00	11,11	1,77		not fullfilled	fullfilled	-20,00
	29,00	10,34	1,65		not fullfilled	fullfilled	-20,00
	30,00	10,00	1,59		not fullfilled	fullfilled	-20,00

5.7. Radiated Field Strength Emissions 30 MHz - 1 GHz

5.7.1. Test location and equipment (for reference numbers please see chapter 'List of test equipment')

Ambient Climatic conditions			Temperature: (22±2)°C	Rel. humidity: (45±15)%		
test site	☒ 441 EMI SAR	☐ 348 EMI cond.	☐ 443 EMI FAR	☐ 347 Radio.lab.	☐ 337 OATS	☒ 487 SAR NSA
receiver	☐ 377 ESCS30	☒ 001 ESS				
Spectr. analys.	☐ 489 ESU 40	☐ 598 FSEM	☐ 264 FSEK	☐ 747 FSU 26	☐	☐
antenna meas	☒ 574 BTA-L	☐ 549 HL025	☐ 608 HL 562	☐ 133 EMCO3115	☐ 302 BBHA9170	☐ 376 BBHA9120E
antenna meas	☐ 123 HUF-Z2	☐ 132 HUF-Z3	☐ 030 HFH-Z2	☐	☐	☐
antenna subst	☐ 071 HUF-Z2	☐ 020 EMCO3115	☐ 063 LP 3146	☐ 303 BBHA9170	☐	☐
signaling	☐ 392 MT8820A	☐ 371 CBT32	☐ 547 CMU	☐ 594 CMW 500	☐ 371 CBT32	☐
otherwise	☐ 400 FTC40x15E	☐ 401 FTC40x15E	☐ 110 USB LWL	☒ 482 Filt. Matrix	☐ 378 RadiSense	
Signalgener.	☐ 008 SMG	☐ 140 SMHU	☐ 263 SMP04	☐	☐	☐
power meter	☐ 262 NRV-S	☐ 266 NRV-Z31	☐ 265 NRV-Z33	☐ 261 NRV-Z55	☐ 356 NRV-Z1	☐
DC power	☐ 086 LNG50-10	☐ 087 EA3013	☐ 354 NGPE 40	☐ 349 car battery	☐ 350 Car battery	☒ 671 EA3013S
line voltage	☒ 120 VAC 60 Hz public mains to AE 1		☒ 12 V DC via Laboratory Power Supply to AE 3			

5.7.2. Requirements & Limits:

FCC	☐ Part 15 Subpart B, §15.109, class B ☒ Part 15 Subpart C, §15.209 @ frequencies defined in §15.205	
ANSI	☐ C63.4-2014 ☒ C63.10-2013	
Frequency Range	**Field Strength Limit at 3 meters Measuring Distance**	
[MHz]	**QUASI Peak [µV/m]**	**QUASI-Peak [dBµV/m]**
30 - 88	**100**	**40.0**
88 - 216	**150**	**43.5**
216 - 960	**200**	**46.0**
above 960	**500**	**54.0**

5.7.3. Restricted Bands of Operation (FCC §15.205)

Frequency Range [MHz]	**Frequency Range [MHz]**	**Frequency Range [MHz]**	**Frequency Range [GHz]**
0.090-0.110	16.42-16.423	399.9-410	4.5-5.15
0.495-0.505	16.69475-16.69525	608-614	5.35-5.46
2.1735-2.1905	16.80425-16.80475	960-1240	7.25-7.75
4.125-4.128	25.5-25.67	1300-1427	8.025-8.5
4.20725-4.20775	37.5-38.25	1645.5-1646.5	9.3-9.5
6.215-6.218	73-74.6	1660-1710	10.6-12.7
6.26775-6.26825	74.8-75.2	1718.8-1722.2	13.25-13.4
6.31175-6.31225	108-121.94	2200-2300	14.47-14.5
8.291-8.294	123-138	2310-2390	15.35-16.2
8.362-8.366	149.9-150.05	2483.5-2500	17.7-21.4
8.37625-8.38675	156.52475-156.52525	2690-2900	22.01-23.12
8.41425-8.41475	156.7-156.9	3260-3267	23.6-24.0
12.29-12.293	162.0125-167.17	3332-3339	31.2-31.8
12.51975-12.52025	167.72-173.2	3345.8-3358	36.43-36.5
12.57675-12.57725	240-285	3600-4400	--
13.36-13.41	322-335.4	--	--
Remark: only spurious emissions are allowed within these frequency bands not exceeding the limits per §15.209			

5.7.4. Test Set-Up & Measurement Settings:

Signal link to test system (if used):	☐ air link	☐ cable connection	☒ none
EUT-grounding	☒ none	☐ with power supply	☐ additional connection
Equipment set up	☒ table top 0.8m height		☐ floor standing
Climatic conditions	Temperature: (22±3°C)		Rel. humidity: (40±20)%
EMI-Receiver (Analyzer) Settings	Scan frequency range: Scan-Mode Detector RBW/VBW Mode: Scan step Sweep-Time	☒ 30 – 1000 MHz ☐ other: ☒ 6 dB EMI-Receiver Mode ☐ 3 dB spectrum analyser mode Peak / Quasi-peak 100 kHz/300 kHz Repetitive-Scan, max-hold 80 kHz Coupled – calibrated display if continuous tx-signal otherwise adapted to EUT's individual duty-cycle	
General measurement procedures	Please see chapter "Test system set-up for electric field measurement in the range 30 MHz to 1 GHz"		

5.7.5. Radiated Field Strength Emissions – 30 MHz to 1 GHz Results:

Radiated Field Strength Emissions – 30 MHz to 1 GHz							
T_{NOM}= 20 °C V_{NOM}= 5 V DC (using AE 1) + 12 V DC (using AE 3)	**Technology: WLAN 2.4 GHz 802.11b/g/n**			**TX-Fixed Channel (Modulated)**			
Diagram No. (Remark 1)	Test Settings Mode | B.W. | Data Rate | Channel (Frequency) | Channel Power	Set-up no.	OP-mode no.	Used detector			Verdict
				PK	AV	QP	
3.11	**b-Mode SISO| 20 MHz| 11 Mbps | Channel 1 (2412 MHz) | 20 dBm**	2	1	☒	☐	☒	**PASS**
3.12	**g-Mode SISO| 20 MHz| 12 Mbit| Channel 6 (2437 MHz) | 20 dBm**	2	1	☒	☐	☒	**PASS**
3.13	**n-Mode SISO|20 MHz| MCS2| Channel 11 (2462 MHz) | 20 dBm**	2	1	☒	☐	☒	**PASS**
Remark 1: For further details please refer → **Annex 1: Test results CETECOM-TR16-1-0180701T08a-A1**							

5.8. Radiated Field Strength Emissions Above 1 GHz

5.8.1. Test location and equipment (for reference numbers please see chapter 'List of test equipment')

Ambient Climatic conditions			Temperature: (22±2)°C	Rel. humidity: (45±15)%		
test site	☐ 441 EMI SAR	☐ 348 EMI cond.	☒ 443 EMI FAR	☐ 347 Radio.lab.	☐ 337 OATS	☐ 487 SAR NSA
receiver	☐ 377 ESCS30	☐ 001 ESS				
Spectr. analys.	☒ 489 ESU 40	☐ 598 FSEM	☐ 264 FSEK	☐ 747 FSU 26	☐	☐
antenna meas	☒ 574 BTA-L	☒ 549 HL025	☐ 608 HL 562	☐ 133 EMCO3115	☒ 302 BBHA9170	☒ 376 BBHA9120E
antenna meas	☐ 123 HUF-Z2	☐ 132 HUF-Z3	☐ 030 HFH-Z2	☐ 477 GPS	☐	☐
antenna subst	☐ 071 HUF-Z2	☐ 020 EMCO3115	☐ 063 LP 3146	☐ 303 BBHA9170	☐	☐
signaling	☐ 392 MT8820A	☐ 371 CBT32	☐ 547 CMU	☐ 594 CMW 500	☐ 371 CBT32	☐
otherwise	☐ 400 FTC40x15E	☐ 401 FTC40x15E	☐ 110 USB LWL	☒ 482 Filt. Matrix	☐ 378 RadiSense	
Signalgener.	☐ 008 SMG	☐ 140 SMHU	☐ 263 SMP04	☐	☐	☐
power meter	☐ 262 NRV-S	☐ 266 NRV-Z31	☐ 265 NRV-Z33	☐ 261 NRV-Z55	☐ 356 NRV-Z1	☐
DC power	☐ 086 LNG50-10	☐ 087 EA3013	☐ 354 NGPE 40	☐ 349 car battery	☐ 350 Car battery	☒ 611 E3632A
line voltage	☒ 120 VAC 60 Hz public mains to AE 1		☒ 12 V DC via Laboratory Power Supply to AE 3			

5.8.2. Requirements & Limits:

FCC	☐ Part 15 Subpart B. §15.109 class B ☒ Part 15 Subpart C. §15.209 for frequencies defined in §15.205 ☒ Part 15.247 (d)			
ANSI	☐ C63.4-2014 ☒ C63.10-2013			
Frequency	**Field Strength Limit at 3 meters Measuring Distance**			
[MHz]	**Average [µV/m]**	**Average [dBµV/m]**	**Peak [µV/m]**	**Peak [dBµV/m]**
above 1 GHz for frequencies as defined in §15.205	**500**	**54.0**	**5000**	**74.0**

5.8.3. Test Set-Up & Measurement Settings:

Signal link to test system (if used):		☐ air link	☐ cable connection	☒ none
EUT-grounding		☒ none	☐ with power supply	☐ additional connection
Equipment set up		☒ table top 1.5m height		☐ floor standing
Climatic conditions		Temperature: (22±3°C)		Rel. humidity: (40±20)%
Spectrum-Analyzer settings	Scan frequency range: Scan-Mode Detector RBW/VBW Mode: Scan step Sweep-Time	☒ 1 – 18 GHz ☒ 18 – 25 GHz ☐ 18 – 40 GHz ☐ other: ☒ 6 dB EMI-Receiver Mode ☐ 3 dB Spectrum analyser Mode Peak and Average 1 MHz / 3 MHz Repetitive-Scan, max-hold 400 kHz Coupled – calibrated display if CW signal otherwise adapted to EUT's individual duty-cycle		
General measurement procedures		Please see chapter "Test system set-up for radiated electric field measurements above 1 GHz"		

5.8.4. Radiated Field Strength Emissions – 1 GHz to 18 GHz Results

Radiated Field Strength Emissions – 1 GHz to 18 GHz							
T_{NOM}= 20 °C V_{NOM}= 5 V DC (using AE 1) + 12 V DC (using AE 3)		Technology: WLAN 2.4 GHz 802.11b/g/n		TX-Fixed Channel (Modulated)			
Diagram No. (Remark 1)	Test Settings Mode | B.W. | Data Rate | Frequency Band - Channel (Frequency)	Set-up no.	OP-mode no.	Used detector			Verdict
				PK	AV	QP	
4.11	**b-Mode SISO| 20 MHz| 11 Mbps | Channel 1 (2412 MHz) | 20 dBm**	2	1	☒	☒	☐	**PASS**
4.12	**g-Mode SISO| 20 MHz| 12 Mbit| Channel 6 (2437 MHz) | 20 dBm**	2	1	☒	☒	☐	**PASS**
4.13	**n-Mode SISO|20 MHz| MCS2| Channel 11 (2462 MHz) | 20 dBm**	2	1	☒	☒	☐	**PASS**
Remark 1: For further details please refer → **Annex 1: Test results CETECOM-TR16-1-0180701T08a-A1** Remark 2: Average Values in Final Result Table are calculated with Duty Cycle Correction Factor.							

5.8.5. Radiated Field Strength Emissions – 18 GHz to 25 GHz Results

Radiated Field Strength Emissions – 18 GHz to 25 GHz							
T_{NOM}= 20 °C V_{NOM}= 5 V DC (using AE 1) + 12 V DC (using AE 3)		Technology: WLAN 2.4 GHz 802.11b/g/n		TX-Fixed Channel (Modulated)			
Diagram No. (Remark 1)	Test Settings Mode | B.W. | Data Rate | Frequency Band - Channel (Frequency)	Set-up no.	OP-mode no.	Used detector			Verdict
				PK	AV	QP	
4.11a	**b-Mode SISO| 20 MHz| 11 Mbps | Channel 1 (2412 MHz) | 20 dBm**	2	1	☒	☒	☐	**PASS**
4.12a	**g-Mode SISO| 20 MHz| 12 Mbit| Channel 6 (2437 MHz) | 20 dBm**	2	1	☒	☒	☐	**PASS**
4.13a	**n-Mode SISO|20 MHz| MCS2| Channel 11 (2462 MHz) | 20 dBm**	2	1	☒	☒	☐	**PASS**
Remark 1: For further details please refer → **Annex 1: Test results CETECOM-TR16-1-0180701T08a-A1** Remark 2: Duty Cycle Correction Factors are applicable to Average Values indicated by Markers.							

5.9. Radiated Band-Edge Compliance

5.9.1. Test location and equipment (for reference numbers please see chapter 'List of test equipment')

Ambient Climatic conditions			Temperature: (22±2)°C	Rel. humidity: (45±15)%		
test site	☐ 441 EMI SAR	☐ 348 EMI cond.	☒ 443 EMI FAR	☐ 347 Radio.lab.	☐ 337 OATS	☐ 487 SAR NSA
receiver	☐ 377 ESCS30	☐ 001 ESS				
Spectr. analys.	☒ 489 ESU 40	☐ 598 FSEM	☐ 264 FSEK	☐ 747 FSU 26	☐	☐
antenna meas	☒ 574 BTA-L	☒ 549 HL025	☐ 608 HL 562	☐ 133 EMCO3115	☒ 302 BBHA9170	☒ 376 BBHA9120E
antenna meas	☐ 123 HUF-Z2	☐ 132 HUF-Z3	☐ 030 HFH-Z2	☐ 477 GPS	☐	☐
antenna subst	☐ 071 HUF-Z2	☐ 020 EMCO3115	☐ 063 LP 3146	☐ 303 BBHA9170	☐	☐
signaling	☐ 392 MT8820A	☐ 371 CBT32	☐ 547 CMU	☐ 594 CMW 500	☐ 371 CBT32	☐
otherwise	☐ 400 FTC40x15E	☐ 401 FTC40x15E	☐ 110 USB LWL	☒ 482 Filt. Matrix	☐ 378 RadiSense	
Signalgener.	☐ 008 SMG	☐ 140 SMHU	☐ 263 SMP04	☐	☐	☐
power meter	☐ 262 NRV-S	☐ 266 NRV-Z31	☐ 265 NRV-Z33	☐ 261 NRV-Z55	☐ 356 NRV-Z1	☐
DC power	☐ 086 LNG50-10	☐ 087 EA3013	☐ 354 NGPE 40	☐ 349 car battery	☐ 350 Car battery	☒ 611 E3632A
line voltage	☒ 120 VAC 60 Hz public mains to AE 1		☒ 12 V DC via Laboratory Power Supply to AE 3			

5.9.2. Requirements & Limits:

FCC	☐ Part 15 Subpart B. §15.109 class B ☒ Part 15 Subpart C. §15.209 for frequencies defined in §15.205 ☒ Part 15.247 (d)			
ANSI	☐ C63.4-2014 ☒ C63.10-2013			
Frequency	**Field Strength Limit at 3 meters Measuring Distance**			
[MHz]	**Average [µV/m]**	**Average [dBµV/m]**	**Peak [µV/m]**	**Peak [dBµV/m]**
above 1 GHz for frequencies as defined in §15.205	**500**	**54.0**	**5000**	**74.0**

5.9.3. Test Set-Up & Measurement Settings:

Signal link to test system (if used):		☐ air link	☐ cable connection	☒ none
EUT-grounding		☒ none	☐ with power supply	☐ additional connection
Equipment set up		☒ table top 1.5m height		☐ floor standing
Climatic conditions		Temperature: (22±3°C)		Rel. humidity: (40±20)%
Spectrum-Analyzer settings	Scan frequency range: Scan-Mode Detector RBW/VBW Mode: Scan step Sweep-Time	☐ 1 – 18 GHz ☐ 18 – 25 GHz ☐ 18 – 40 GHz ☒ other: see diagrams ☐ 6 dB EMI-Receiver Mode ☒ 3 dB Spectrum analyzer Mode Peak and Average Left band-edge: 100kHz/300kHz Right band-edge: 1 MHz / 3 MHz Repetitive-Scan, max-hold 40kHz or 400 kHz Coupled – calibrated display if CW signal otherwise adapted to EUT's individual duty-cycle		
General measurement procedures		Please see chapter "Test system set-up for radiated electric field measurements above 1 GHz" for general measurements procedures in anechoic chamber.		

5.9.4. Radiated Band-Edge Measurement Method

For uncritical results where a measurement resolution bandwidth of 1MHz can clearly show the compliance without influencing the results, a field strength measurement was performed to show compliance.

For critical results a Marker-Delta marker method was used for showing compliance to restricted bands. The method is according ANSI C63.10:2013, Chapter 6.10.6 "Marker-Delta method",. The method consists of three independent steps:

1. Step: Prior to the measurement the fundamental radiated In-Band field strength was performed. The determined value is used as reference value.

2. Step: Second step consist of finding the relative attenuation between the fundamental emission and the maximum local out-of-band emission (within 2 MHz range around the band edge either on the band-edge directly or some modulation product if the level is greater than that on the band-edge) when measured with lower resolution bandwidth.

3. Step: The delta value recorded in step 2 will be subtracted from value recorded in step 1, thus giving the required field strength at the band-edge. This value must fulfil the requirements for radiated spurious emissions in restricted bands in FCC §15.205 with the general limits of FCC §15.209.

5.9.5. Radiated Band-Edge Results:

5.9.5.1. Non-Restricted Bands Near-By Limits According to FCC §15.247

Test Settings:	**Technology: WLAN 2.4 GHz 802.11b/g/n**	**TX-Fixed Channel (Modulated)**
Test Conditions:	T_{NOM}= 20 °C	V_{NOM}= 5 V DC (using AE 1) + 12 V DC (using AE 3)
Set-up No.:	2	
Op. Mode:	1	

Diagram no.	Channel no.	Restricted band ?	Fundamental Value [dBuV/m]		Band-Edge Value [dBuV/m]	Difference [dB]	Limit [dBc]	Margin [dB]	Verdict	Remark: Mode-B.W.-Data Rate-Power
			Peak -Value	Average -Value + Duty Cycle Correction	Peak-Value					
9.11	1	NO	102,36	93,72	55,28	47,08	20,00	27,08	PASS	b-Mode--SISO-20 MHz-11Mbit+20dBm
9.13	1	NO	85,10	77,76	54,22	30,88	20,00	10,88	PASS	g-Mode-SISO-20 MHz-12Mbit+20dBm
9.15	1	NO	85,18	77,59	55,30	29,88	20,00	9,88	PASS	n-Mode-SISO-20 MHz-MCS2+20dBm

Remark 1: For further details please refer → **Annex 1: Test results CETECOM-TR16-1-0180701T08a-A1**
Remark 2: Duty Cycle Correction Factors are applicable to Average Values indicated by Markers.

5.9.5.2. Restricted Bands Near-By Limits According to FCC §15.205 §15.209

Test Settings:	**Technology: WLAN 2.4 GHz 802.11b/g/n**	**TX-Fixed Channel (Modulated)**
Test Conditions:	T_{NOM}= 20 °C	V_{NOM}= 5 V DC (using AE 1) + 12 V DC (using AE 3)
Set-up No.:	2	
Op. Mode:	1	

Diagram no.	Channel no.	Restricted band ?	Fundamental Value [dBuV/m]		Band-Edge Value [dBuV/m]		Limits [dBuV/m]		Margin [dB]		Verdict	Remark: Mode-B.W.-Data Rate-Power
			Peak -Value	Average -Value + Duty Cycle Correction	Peak -Value	Average -Value + Duty Cycle Correction	Peak -Value	Average -Value	Peak	Average		
9.12	11	YES	Not measured	Not measured	53,29	42,29	74,00	54,00	20,71	11,71	**PASS**	b-Mode--SISO-20 MHz-11Mbit+20dBm
9.14	11	YES	Not measured	Not measured	52,48	43,00	74,00	54,00	21,53	11,00	**PASS**	g-Mode-SISO-20 MHz-12Mbit+20dBm
9.16	11	YES	Not measured	Not measured	53,33	43,48	74,00	54,00	20,67	10,52	**PASS**	n-Mode-SISO-20 MHz-MCS2+20dBm

Remark 1: For further details please refer → **Annex 1: Test results CETECOM-TR16-1-0180701T08a-A1**
Remark 2: Duty Cycle Correction Factors are applicable to Average Values indicated by Markers.

5.9.6. Radiated Band-Edge Verdict: Compliant

5.10. AC-Power Lines Conducted Emissions

5.10.1. Test location and equipment (for reference numbers please see chapter 'List of test equipment')

test site	☐ 333 EMI field	☒ 348 EMI cond.				
receiver	☐ 001 ESS	☒ 377 ESCS 30	☐ 489 ESU 40	☐ 620 ESU 26		
LISN	☒ 005 ESH2-Z5	☐ 007 ESH3-Z6	☐ 300 ESH3-Z5		☐ no LISN for AE	
signaling	☐ 392 MT8820A	☐ 436 CMU	☐ 547 CMU	☐ 594 CMW		
line voltage	☒ 120 VAC 60 Hz public mains to AE 1					

5.10.2. Requirements & Limits:

FCC	☒ Part 15 Subpart C, §15.207	
ANSI	C63.4-2014, § 5.2, 6, 7	
Frequency	☒ **Conducted Limit Class B**	
[MHz]	**QUASI-Peak [dBµV]**	**AVERAGE [dBµV]**
0.15 – 0.5	**66 to 56***	**56 to 46***
0.5 – 5	**56**	**46**
5 – 30	**60**	**50**
Remark: * decreases with the logarithm of the frequency		

5.10.3. Test Set-Up & Measurement Settings:

Signal link to test system (if used):		☐ air link	☐ cable connection	☒ none
EUT-grounding		☐ none	☒ with power supply	☐ additional connection
Equipment set up		☒ table top (40 cm distance to reference ground plane (wall)		☐ floor standing EUT stands isolated on reference ground plane (floor)
Climatic conditions		Temperature: (22±3°C)		Rel. humidity: (40±20)%
EMI-Receiver or Analyzer settings	Scan data	☐ 9 – 150 kHz, RBW = 200 Hz, Step = 61 Hz ☒ 150 kHz – 30 MHz RBW = 9 kHz, Step = 4 kHz ☐ other:		
	Scan-Mode Pre-measurement Final measurement	6 dB EMI-Receiver Mode Peak detector, Repetitive-Scan, max-hold, sweep-time 50 µs per frequency point Average & Quasi-peak detector at critical frequencies		
General measurement procedures		Please see chapter "Test system set-up for AC power line conducted emissions measurements"		

5.10.4. AC-Power Lines Conducted Emissions Results:

AC-Power Lines Conducted Emissions – 150 kHz to 30 MHz								
T_{NOM}= 20 °C V_{NOM}= 5 V DC (using AE 1)		**Technology: WLAN 2.4 GHz 802.11b/g/n**			**TX-Fixed Channel (Modulated)**			
Diagram No. (Remark 1)	Test Settings Mode | B.W. | Data Rate | Frequency Band - Channel (Frequency)		Set-up no.	OP-mode no.	Used detector			Verdict
					PK	AV	QP	
1.01	**g-Mode SISO| 20 MHz| 12 Mbit| Channel 6 (2437 MHz) | 20 dBm**		2	1	☒	☒	☐	**PASS**
Remark 1: For further details please refer → **Annex 1: Test results CETECOM-TR16-1-0180701T08a-A1**								

5.11. Measurement Uncertainties

The reported uncertainties are calculated based on the standard uncertainty multiplied with the appropriate coverage factor **k**, such that a confidence level of approximately 95% is achieved.
For uncertainty determination, each component used in the concrete measurement set-up was taken in account and it's contribution to the overall uncertainty according it's statistical distribution calculated.

Following table shows expectable uncertainties for each measurement type performed.

RF-Measurement	Reference	Frequency range	Calculated uncertainty based on a confidence level of 95%						Remarks
Conducted emissions (U_{CISPR})	CISPR 16-2-1	9 kHz - 150 kHz 150 kHz - 30 MHz	4.0 dB 3.6 dB						-
Radiated emissions Enclosure	CISPR 16-2-3	30 MHz - 1 GHz 1 GHz - 18 GHz	4.2 dB 5.1 dB						E-Field
Disturbance power	CISPR 16-2-2	30 MHz - 300 MHz	-						-
Power Output radiated	-	30 MHz - 4 GHz	3.17 dB						Substitution method
Power Output conducted	-	Set-up No.	Cel-C1	Cel-C2	BT1	W1	W2	--	
		9 kHz - 12.75 GHz	N/A	0.60	0.7	0.25	N/A	--	-
		12.75 - 26.5GHz	N/A	0.82	--	N/A	N/A	--	
Conducted emissions on RF-port	-	9 kHz - 2.8 GHz	0.70	N/A	0.70	N/A	0.69	--	N/A - not applicable
		2.8 GHz - 12.75GHz	1.48	N/A	1.51	N/A	1.43	--	
		12.75 GHz - 18GHz	1.81	N/A	1.83	N/A	1.77	--	
		18 GHz - 26.5GHz	1.83	N/A	1.85	N/A	1.79	--	
Occupied bandwidth	-	9 kHz - 4 GHz	0.1272 ppm (Delta Marker)						Frequency error
			1.0 dB						Power
Emission bandwidth	- -	9 kHz - 4 GHz	0.1272 ppm (Delta Marker)						Frequency error
			See above: 0.70 dB						Power
Frequency stability	-	9 kHz - 20 GHz	0.0636 ppm						-
Radiated emissions Enclosure	-	150 kHz - 30 MHz 30 MHz - 1 GHz 1 GHz - 20 GHz	5.0 dB 4.2 dB 3.17 dB						Magnetic field E-field Substitution

Table: measurement uncertainties, valid for conducted/radiated measurements

6. Abbreviations Used in this Report

The abbreviations	
ANSI	American National Standards Institute
AV . AVG. CAV	Average detector
EIRP	Equivalent isotropically radiated power. determined within a separate measurement
EGPRS	Enhanced General Packet Radio Service
EUT	Equipment Under Test
FCC	Federal Communications Commission. USA
IC	Industry Canada
n.a.	not applicable
Op-Mode	Operating mode of the equipment
PK	Peak
RBW	resolution bandwidth
RF	Radio frequency
RSS	Radio Standards Specification. Documents from Industry Canada
Rx	Receiver
TCH	Traffic channel
Tx	Transmitter
QP	Quasi peak detector
VBW	Video bandwidth
ERP	Effective radiated power

7. Accreditation Details of CETECOM's Laboratories and Test Sites

Ref.-No.	Accreditation Certificate	Valid for laboratory area or test site	Accreditation Body
-	D-PL-12047-01-01	All laboratories and test sites of CETECOM GmbH. Essen	DAkkS. Deutsche Akkreditierungsstelle GmbH
337 487 558 348 348	(MRA US-EU 0003)	Radiated Measurements 30 MHz to 1 GHz. 3 m / 10 m (OATS) Radiated Measurements 30 MHz to 1 GHz. 3 m (SAR) Radiated Measurements above 1 GHz. 3 m (FAR) Mains Ports Conducted Interference Measurements Telecommunication Ports Conducted Interference Measurem.	FCC. Federal Communications Commission Laboratory Division. USA
337 487 550 558	3462D-1 3462D-2 3462D-2 3462D-3	Radiated Measurements 30 MHz to 1 GHz. 3 m / 10 m (OATS) Radiated Measurements 30 MHz to 1 GHz. 3 m (SAR) Radiated Measurements 1 GHz to 6 GHz. 3 m (SAR) Radiated Measurements above 1 GHz. 3 m (FAR)	IC. Industry Canada Certification and Engineering Bureau
487 550 348 348	R-2666 G-301 C-2914 T-1967	Radiated Measurements 30 MHz to 1 GHz. 3 m (SAR) Radiated Measurements 1 GHz to 6 GHz. 3 m (SAR) Mains Ports Conducted Interference Measurements Telecommunication Ports Conducted Interference Measurem.	VCCI. Voluntary Control Council for Interference by Information Technology Equipment. Japan
OATS = Open Area Test Site. SAR = Semi Anechoic Room. FAR = Fully Anechoic Room			

8. Instruments and Ancillary

TC"
The "Ref.-No" in the left column of the following tables allows the clear identification of the laboratory equipment.

8.1.1. Test Software and Firmware Of Equipment

Ref.-No.	Equipment	Type	Serial-No.	Version of Firmware or Software during the test
001	EMI Test Receiver	ESS	825132/017	Firm.= 1.21 , OTP=2.0, GRA=2.0
012	Signal Generator (EMS-cond.)	SMY 01	839069/027	Firm.= V 2.02
013	Power Meter (EMS cond.)	NRVD	839111/003	Firm.= V 1.51
017	Digital Radiocommunication Tester	CMD 60 M	844365/014	Firmware = V 3.52 .22.01.99, DECT = D2.87 13.01.99
053	Audio Analyzer	UPA3	860612/022	Firm. V 4.3
119	RT Harmonics Analyzer dig. Flickermeter	B10	G60547	Firm.= V 3.1DHG
140	Signal Generator	SMHU	831314/006	Firm.= 3.21
261	Thermal Power Sensor	NRV-Z55	825083/0008	EPROM-Datum 02.12.04, SE EE 1 B
262	Power Meter	NRV-S	825770/0010	Firm.= 2.6
263	Signal Generator	SMP 04	826190/0007	Firm.=3.21
295	Racal Digital Radio Test Set	6103	1572	UNIT Firmware= 4.04, SW-Main=4.04, SW-BBP=1.04, SW-DSP=1.02, Hardboot=1.02, Softboot=2.02
298	Univ. Radio Communication Tester	CMU 200	832221/091	R&S Test Firmware =3.53 /3.54 (current Testsoftw. f. all band used
323	Digital Radiocommunication Tester	CMD 55	825878/0034	Firm.= 3.52 .22.01.99
335	CTC-EMS-Conducted	System EMS Conducted	-	EMC 32 V 8.52
340	Digital Radiocommunication Tester	CMD 55	849709/037	Firm.= 3.52 .22.01.99
355	Power Meter	URV 5	891310/027	Firm.= 1.31
365	10V Insertion Unit 50 Ohm	URV5-Z2	100880	Eprom Data = 31.03.08
366	Ultra Compact Simulator	UCS 500 M4	V0531100594	Firm. UCS 500=001925/3.06a02, rc=ISMIEC 4.10
371	Bluetooth Tester	CBT32	100153	CBT V5,30+ SW-Option K55, K57
377	EMI Test Receiver	ESCS 30	100160	Firm.= 2.30, OTP= 02.01, GRA= 02.36
378	Broadband RF Field Monitor	RadiSense III	03D00013SNO-08	Firm.= V.03D13
389	Digital Multimeter	Keithley 2000	0583926	Firm. = A13 (Mainboard) A02 (Display)
392	Radio Communication Tester	MT8820A	6K00000788	Firm.= 4.50 #005, IPL=4.01#001,OS=4.02#001, GSM=4.41#013, W-CDMA= 4.54#004, scenario= 4.52#002
436	Univ. Radio Communication Tester	CMU 200	103083	R&S Test Firmware Base=5.14, Mess-Software= GSM:5.14 WCDMA:5.14 (current Testsoftw. F. all band
441	CTC-SAR-EMI Cable Loss	System EMI field (SAR)	-	EMC 32 Version 8.52
442	CTC-SAR-EMS	System EMS field (SAR)	-	EMC 32 Version 8.40
443	CTC-FAR-EMI-RSE	System CTC-FAR-EMI-RSE	-	Spuri 7.2.5 or EMC 32 Ver. 9.15.00
444	CTC-FAR-EMS field	System-EMS-Field (FAR)	-	EMC 32 Version 9.15.00
460	Univ. Radio Communication Tester	CMU 200	108901	R&S Test Firmware Base=5.14, GSM=5.14 WCDMA=5.14 (current Testsoftw.,f. all band to be used,
489	EMI Test Receiver	ESU40	1000-30	Firmware=4.43 SP3, Bios=V5.1-16-3, Spec. =01.00
491	ESD Simulator dito	ESD dito	dito307022	V 2.30
524	Voltage Drop Simulator	VDS 200	0196-16	Software Nr: 000037 Version V4.20a01
526	Burst Generator	EFT 200 A	0496-06	Software Nr. 000034 Version V2.32
527	Micro Pulse Generator	MPG 200 B	0496-05	Software-Nr. 000030 Version V2.43
528	Load Dump Simulator	LD 200B	0496-06	Software-Nr. 000031 Version V2.35a01
546	Univ. Radio Communication Tester	CMU 200	106436	R&S Test Firmware Base=5.14, GSM=5.14 WCDMA=5.14 (current Testsoftw.,f. all band to be used
547	Univ. Radio Communication Tester	CMU 200	835390/014	R&S Test Firmware Base=V5.1403 (current Testsoftw., f. all band used, GSM = 5.14 WCDMA: = 5.14
584	Spectrum Analyzer	FSU 8	100248	2.82_SP3
597	Univ. Radio Communication Tester	CMU 200	100347	R&S Test Firmware Base=5.01, GSM=5.02 WCDMA= not installed, Mainboard= µP1=V.850
598	Spectrum Analyzer	FSEM 30	831259/013	Firmware Bios 3.40 , Analyzer 3.40 Sp 2
607	Signal Generator	SMR 20	832033/011	V1.25
620	EMI Test Receiver	ESU 26	100362	4.43_SP3
642	Wideband Radio Communication Tester	CMW 500	126089	Setup V03.26, Test programm component V03.02.20
670	Univ. Radio Communication Tester	CMU 200	106833	µP1 =V8.50, Firmware = V.20
689	Vector Signal Generator	SMU200	100970	02.20.360.142
692	Bluetooth Tester	CBT 32	100236	CBT V 5.40, FW: V.2.41 (FPGA Digital, V. 3.09 FPGA RF)

8.1.2. Single Instruments and Test Systems

Ref.-No.	Equipment	Type	Serial-No.	Manufacturer	Interval of calibration	Remark	Cal due
001	EMI Test Receiver	ESS	825132/017	Rohde & Schwarz	12 M	-	16.05.2018
005	AC - LISN (50 Ohm/50µH, test site 1)	ESH2-Z5	861741/005	Rohde & Schwarz	12 M	-	15.05.2018
007	Single-Line V-Network (50 Ohm/5µH)	ESH3-Z6	892563/002	Rohde & Schwarz	12 M	-	17.05.2018
009	Power Meter (EMS-radiated)	NRV	863056/017	Rohde & Schwarz	24 M	-	15.05.2019
016	Line Impedance Simulating Network	Op. 24-D	B6366	Spitzenberger+Spies	36 M	-	30.05.2019
021	Loop Antenna (H-Field)	6502	9206-2770	EMCO	36 M	-	30.04.2018
030	Loop Antenna (H-field)	HFH-Z2	879604/026	Rohde & Schwarz	36 M	-	30.04.2018
033	RF-current probe (100kHz-30MHz)	ESH2-Z1	879581/18	Rohde & Schwarz	24 M	-	15.05.2019
057	relay-switch-unit (EMS system)	RSU	494440/002	Rohde & Schwarz	pre-m	1a	
060	power amplifier (DC-2kHz)	PAS 5000	B6363	Spitzenberger+Spies	-	3	
086	DC - power supply, 0 -10 A	LNG 50-10	-	Heinzinger Electronic	pre-m	2	
087	DC - power supply, 0 -5 A	EA-3013 S	-	Elektro Automatik	pre-m	2	
091	USB-LWL-Converter	OLS-1	007/2006	Ing. Büro Scheiba	-	4	
099	passive voltage probe	ESH2-Z3	299.7810.52	Rohde & Schwarz	36 M	-	30.04.2018
100	passive voltage probe	Probe TK 9416	without	Schwarzbeck	36 M	-	30.04.2018
110	USB-LWL-Converter	OLS-1	-	Ing. Büro Scheiba	-	4	
119	RT Harmonics Analyzer dig. Flickermeter	B10	G60547	BOCONSULT	36 M	-	30.05.2019
133	horn antenna 18 GHz (Meas 1)	3115	9012-3629	EMCO	36 M	1c	10.03.2020
134	horn antenna 18 GHz (Subst 2)	3115	9005-3414	EMCO	36 M	-	10.03.2020
136	adjustable dipole antenna (Dipole 1)	3121C-DB4	9105-0697	EMCO	36 M	-	30.04.2018
140	Signal Generator	SMHU	831314/006	Rohde & Schwarz	24 M	-	30.05.2018
248	attenuator	SMA 6dB 2W	-	Radiall	pre-m	2	
249	attenuator	SMA 10dB 10W	-	Radiall	pre-m	2	
252	attenuator	N 6dB 12W	-	Radiall	pre-m	2	
256	attenuator	SMA 3dB 2W	-	Radiall	pre-m	2	
257	hybrid	4031C	04491	Narda	pre-m	2	
260	hybrid coupler	4032C	11342	Narda	pre-m	2	
261	Thermal Power Sensor	NRV-Z55	825083/0008	Rohde & Schwarz	24 M	-	30.05.2018
262	Power Meter	NRV-S	825770/0010	Rohde & Schwarz	24 M	-	30.05.2018
263	Signal Generator	SMP 04	826190/0007	Rohde & Schwarz	36 M	-	30.05.2019
265	peak power sensor	NRV-Z33, Model 04	840414/009	Rohde & Schwarz	24 M	-	30.05.2018
266	Peak Power Sensor	NRV-Z31, Model 04	843383/016	Rohde & Schwarz	24 M	-	30.05.2018
267	notch filter GSM 850	WRCA 800/960-6EEK	9	Wainwright GmbH	pre-m	2	
270	termination	1418 N	BB6935	Weinschel	pre-m	2	
271	termination	1418 N	BE6384	Weinschel	pre-m	2	
272	attenuator (20 dB) 50 W	Model 47	BF6239	Weinschel	pre-m	2	
273	attenuator (10 dB) 100 W	Model 48	BF9229	Weinschel	pre-m	2	
274	attenuator (10 dB) 50 W	Model 47 (10 dB) 50 W	BG0321	Weinschel	pre-m	2	
275	DC-Block	Model 7003 (N)	C5129	Weinschel	pre-m	2	
276	DC-Block	Model 7006 (SMA)	C7061	Weinschel	pre-m	2	
279	power divider	1515 (SMA)	LH855	Weinschel	pre-m	2	
298	Univ. Radio Communication Tester	CMU 200	832221/091	Rohde & Schwarz	pre-m	3	
300	AC LISN (50 Ohm/50µH, 1-phase)	ESH3-Z5	892 239/020	Rohde & Schwarz	12 M	-	17.05.2018
301	attenuator (20 dB) 50W, 18GHz	47-20-33	AW0272	Lucas Weinschel	pre-m	2	
302	horn antenna 40 GHz (Meas 1)	BBHA9170	155	Schwarzbeck	36 M	-	14.03.2020
303	horn antenna 40 GHz (Subst 1)	BBHA9170	156	Schwarzbeck	36 M	-	20.03.2020
331	Climatic Test Chamber -40/+180 Grad	HC 4055	43146	Heraeus Vötsch	24 M	-	30.10.2018
341	Digital Multimeter	Fluke 112	81650455	Fluke	24 M	-	30.05.2018
342	Digital Multimeter	Voltcraft M-4660A	IB 255466	Voltcraft	24 M	-	17.05.2019
347	laboratory site	radio lab.	-	-	-	5	
348	laboratory site	EMI conducted	-	-	-	5	
354	DC - Power Supply 40A	NGPE 40/40	448	Rohde & Schwarz	pre-m	2	
355	Power Meter	URV 5	891310/027	Rohde & Schwarz	24 M	-	30.05.2018
357	power sensor	NRV-Z1	861761/002	Rohde & Schwarz	24 M	-	24.05.2019
371	Bluetooth Tester	CBT32	100153	R&S	36 M	-	30.05.2019
373	Single-Line V-Network (50 Ohm/5µH)	ESH3-Z6	100535	Rohde & Schwarz	12 M	-	17.05.2018
377	EMI Test Receiver	ESCS 30	100160	Rohde & Schwarz	12 M	-	15.05.2018
392	Radio Communication Tester	MT8820A	6K00000788	Anritsu	12 M	-	18.05.2018
405	Thermo-/Hygrometer	OPUS 10 THI	126.0604.0003.3.3.3.2 2	LUFFT Mess u. Regeltechnik	24 M	-	30.03.2019
431	Model 7405	Near-Field Probe Set	9305-2457	EMCO	-	4	
436	Univ. Radio Communication Tester	CMU 200	103083	Rohde & Schwarz	12 M	-	24.05.2018
439	UltraLog-Antenna	HL 562	100248	Rohde & Schwarz	36 M	-	10.03.2020
443	CTC-FAR-EMI-RSE	System CTC-FAR-EMI-RSE	-	ETS-Lindgren / CETECOM	12 M	5	30.10.2017
454	Oscilloscope	HM 205-3	9210 P 29661	Hameg	-	4	
456	DC-Power supply 0-5 A	EA 3013 S	207810	Elektro Automatik	pre-m	2	
459	DC -Power supply 0-5 A , 0-32 V	EA-PS 2032-50	910722	Elektro Automatik	pre-m	2	
460	Univ. Radio Communication Tester	CMU 200	108901	Rohde & Schwarz	12 M	-	16.06.2018
463	Universal source	HP3245A	2831A03472	Agilent	-	4	
466	Digital Multimeter	Fluke 112	89210157	Fluke USA	24 M	-	30.05.2018

Ref.-No.	Equipment	Type	Serial-No.	Manufacturer	Interval of calibration	Remark	Cal due
467	Digital Multimeter	Fluke 112	89680306	Fluke USA	36 M	-	30.04.2018
468	Digital Multimeter	Fluke 112	90090455	Fluke USA	36 M	-	30.04.2018
477	ReRadiating GPS-System	AS-47	-	Automotive Cons. Fink	-	3	
480	power meter (Fula)	NRVS	838392/031	Rohde & Schwarz	24 M	-	16.05.2019
482	filter matrix	Filter matrix SAR 1	-	CETECOM (Brl)	-	1d	
487	System CTC NSA-Verification SAR-EMI	System EMI field (SAR) NSA	-	ETS Lindgren / CETECOM	24 M	-	31.03.2019
489	EMI Test Receiver	ESU40	1000-30	Rohde & Schwarz	12 M	-	18.05.2019
502	band reject filter	WRCG 1709/1786-1699/1796-	SN 9	Wainwright	pre-m	2	
503	band reject filter	WRCG 824/849-814/859-	SN 5	Wainwright	pre-m	2	
517	relais switch matrix	HF Relais Box Keithley	SE 04	Keithley	pre-m	2	
523	Digital Multimeter	L4411A	MY46000154	Agilent	24 M	-	18.05.2019
529	6 dB Broadband resistive power divider	Model 1515	LH 855	Weinschel	pre-m	2	
530	10 dB Broadband resistive power divider	R 416110000	LOT 9828	-	pre-m	2	
546	Univ. Radio Communication Tester	CMU 200	106436	R&S	12 M	-	30.03.2018
547	Univ. Radio Communication Tester	CMU 200	835390/014	Rohde & Schwarz	12 M	-	05.07.2018
549	Log.Per-Antenna	HL025	1000060	Rohde & Schwarz	36/12 M	-	31.07.2018
550	System CTC S-VSWR Verification SAR-EMI	System EMI Field SAR S-VSWR	-	ETS Lindgren/CETECOM	24 M	-	30.03.2019
558	System CTC FAR S-VSWR	System CTC FAR S-VSWR	-	CTC	24 M	-	08.08.2019
574	Biconilog Hybrid Antenna	BTA-L	980026L	Frankonia	36/12 M	-	31.03.2019
584	Spectrum Analyzer	FSU 8	100248	Rohde & Schwarz	pre-m	-	
597	Univ. Radio Communication Tester	CMU 200	100347	Rohde & Schwarz	pre-m	-	
600	power meter	NRVD (Reserve)	834501/018	Rohde & Schwarz	24 M	-	17.05.2019
601	medium-sensitivity diode sensor	NRV-Z5 (Reserve)	8435323/003	Rohde & Schwarz	24 M	-	15.05.2019
602	peak power sensor	NRV-Z32 (Reserve)	835080	Rohde & Schwarz	24 M	-	
611	DC power supply	E3632A	KR 75305854	Agilent	pre-m	2	
612	DC power supply	E3632A	MY 40001321	Agilent	pre-m	2	
613	Attenuator	R416120000 20dB 10W	Lot. 9828	Radiall	pre-m	2	
616	Digitalmultimeter	Fluke 177	88900339	Fluke	24 M	-	30.05.2018
617	Power Splitter/Combiner	ZFSC-2-2-S+	S F987001108	Mini Circuits	-	2	
618	Power Splitter/Combiner	50PD-634	600994	JFW Industries USA	-	2	
619	Power Splitter/Combiner	50PD-634	600995	JFW Industries, USA	-	3	
620	EMI Test Receiver	ESU 26	100362	Rohde-Schwarz	12 M	-	16.05.2018
621	Step Attenuator 0-139 dB	RSP	100017	Rohde & Schwarz	pre-m	2	
625	Generic Test Load USB	Generic Test Load USB	-	CETECOM	-	2	
627	data logger	OPUS 1	201.0999.9302.6.4.1.4 3	G. Lufft GmbH	24 M	-	30.03.2019
634	Spectrum Analyzer	FSM (HF-Unit)	826188/010	Rohde & Schwarz	pre-m	2	
637	High Speed HDMI with Ethernet 1m	HDMI cable with Ethernet 1m	-	KogiLink	-	2	
638	HDMI Kabel with Ethernet 1,5 m flach	HDMI cable with Ethernet	-	Reichelt	-	2	
640	HDMI cable 2m rund	HDMI cable 2m rund	-	Reichelt	-	2	
641	HDMI cable with Ethernet	Certified HDMI cable with	-	PureLink	-	2	
642	Wideband Radio Communication Tester	CMW 500	126089	Rohde&Schwarz	12 M	-	24.05.2018
644	Amplifierer	ZX60-2534M+	SN865701299	Mini-Circuits	-	-	
670	Univ. Radio Communication Tester	CMU 200	106833	Rohde & Schwarz	24 M	-	30.05.2018
671	DC-power supply 0-5 A	EA-3013S	-	Elektro Automatik	pre-m	2	
678	Power Meter	NRP	101638	Rohde&Schwarz	pre-m	-	
683	Spectrum Analyzer	FSU 26	200571	Rohde & Schwarz	12 M	-	17.05.2018
686	Field Analyzer	EHP-200A	160WX30702	Narda Safety Test Solutions	24 M	-	29.03.2019
687	Signal Generator	SMF 100A	102073	Rohde&Schwarz	12 M	-	17.05.2018
688	Pre Amp	JS-18004000-40-8P	1750117	Miteq	pre-m	-	
690	Spectrum Analyzer	FSU	100302/026	Rohde&Schwarz	12 M	-	16.05.2018
691	OSP120 Base Unit	OSP120	101183	Rohde & Schwarz	12 M	-	22.05.2018
692	Bluetooth Tester	CBT 32	100236	Rohde & Schwarz	36 M	-	29.05.2020
697	Power Splitter	ZN4PD-642W-S+	165001445	Mini-Circuits	-	2	
703	INNCO Antennen Mast	MA 4010-KT080-XPET-ZSS3	MA4170-KT100-XPET-	INNCO	pre-m	-	
704	INNCON Controller	CO 3000-4port	CO3000/933/3841051 6/L	INNCO Systems GmBh	pre-m	-	
711	Harmonic Mixer 90 GHz - 140GHz	RPG FS-Z140	101004	RPG	12 M	-	22.02.2018
712	Harmonic Mixer 75 GHz - 110GHz	FS-Z110	101468	Rohde & Schwarz	12 M	-	22.02.2018
713	Harmonic Mixer, 50 GHz - 75GHz	FS-Z75	101022	Rohde & Schwarz	12 M	-	22.05.2018
714	Signal Analyzer 67GHz	FSW67	104023	Rohde & Schwarz	24 M	-	03.03.2019
715	Harmonic Mixer, 140 GHz - 220GHz	FS-Z220	101009	RPG Radiometer Physics	12 M	-	03.08.2018
716	Harmonic Mixer 220 GHz to 325 GHZ	FS-Z325	101005	RPG Radiometer Physics	12 M	-	13.02.2018
747	Spectrum Analyzer	FSU 26	200152	Rohde & Schwarz	12 M	-	18.05.2018
748	Pickett-Potter Horn Antenna	FH-PP 4060	010001	Radiometer Physiscs	-	-	

Ref.-No.	Equipment	Type	Serial-No.	Manufacturer	Interval of calibration	Remark	Cal due
749	Pickett-potter Horn Antenna	FH-PP 60-90	010003	Radiometer Physics	-	-	
750	Pickett-Potter Horn Antenna	FH-PP 140-220	010011	Radiometer Physics	-	-	

8.1.3. Legend

Note / remarks		Calibrated during system calibration:
	1a	System CTC-SAR-EMS (Ref.-No. 442)
	1b	System-CTC-EMS-Conducted (Ref.-No. 335)
	1c	System CTC-FAR-EMI-RSE (Ref.-No . 443)
	1d	System CTC-SAR-EMI (Ref.-No . 441)
	1e	System CTC-OATS (EMI radiated) (Ref.-No. 337)
	1 f	System CTC-CTIA-OTA (Ref.-No . 420)
	1 g	System CTC-FAR-EMS (Ref.-No . 444)
	2	Calibration or equipment check immediately before measurement
	3	Regulatory maintained equipment for functional check or support purpose
	4	Ancillary equipment without calibration e.g. mechanical equipment or monitoring equipment
	5	Test System

Interval of calibration	12 M	12 month
	24 M	24 month
	36 M	36 month
	24/12 M	Calibration every 24 months. between this every 12 months internal validation
	36/12 M	Calibration every 36 months. between this every 12 months internal validation
	Pre-m	Check before starting the measurement
	-	Without calibration

9. Versions of Test Reports (change history)

Version	Applied changes	Date of release
--	Inital release	2017-10-06
--	--	--
--	--	--