FCC SAR Compliance Test Report

For

INFINIX MOBILITY LIMITED

FLAT 39 8/F BLOCK D WAH LOK INDUSTRIAL CENTRE 31-35 SHAN MEI STREET

FOTAN NT

Model: X6511E

Test Engineer:	Li Wanxiang
Report Number:	WSCT-A2LA-R&E211100558A-SAR
Report Date:	10 December 2021
FCC ID:	2AIZN-X6511E
Check By:	Peng Peng
Approved By:	Wang Fengbing
Prepared By:	World Standardization Certification & Testing Group (Shenzhen) Co., Ltd. Building A-B, Baoshi Science & Technology Park, Baoshi Road, Bao'an District, Shenzhen, Guangdong, China Tel: +86-755-26996192 Fax: +86-755-86376605

Table of contents

1 General information 5
1.1 Notes 5
1.2 Application details 5
1.3 Statement of Compliance 6
1.4 EUT Information 8
2 Testing laboratory 10
3 Test Environment 10
4 Applicant and Manufacturer 10
5 Test standard/s: 11
5.1 RF exposure limits 12
5.2 SAR Definition 12
6 SAR Measurement System 13
6.1 The Measurement System 13
6.2 Robot 14
6.3 Probe 14
6.4 Measurement procedure 15
6.5 Description of interpolation/extrapolation scheme 16
6.6 Phantom 17
6.7 Device Holder 18
6.8 Video Positioning System 19
6.9 Tissue simulating liquids: dielectric properties 20
6.10 Tissue simulating liquids: parameters 21
7 System Check 23
7.1 System check procedure 23
7.2 System check results 24
8 SAR Test Test Configuration 25
8.1 GSM Test Configurations 25

8.2 UMTS Test Configuration 25
8.3 LTE Test Configuration 27
8.4 Wi-Fi Test Configuration 29
8.5 WiFi 2.4G SAR Test Procedures 29
9 Detailed Test Results 30
9.1 Conducted Power measurements 30
9.1.1 Conducted Power of GSM850 30
9.1.2 Conducted Power of GSM1900 31
9.1.3 Conducted Power of UMTS Band II 32
9.1.4 Conducted Power of UMTS Band IV 32
9.1.5 Conducted Power of UMTS Band V 33
9.1.6 Conducted Power of LTE Band II 34
9.1.7 Conducted Power of LTE Band IV 37
9.1.8 Conducted Power of LTE Band V 40
9.1.9 Conducted Power of LTE Band VII 42
9.1.10 Conducted Power of LTE Band XXXVIII 44
9.1.11 Conducted Power of LTE Band XLI 46
9.1.12 Conducted Power of Wi-Fi 2.4G 48
9.1.13 Conducted Power of BT 48
9.1.14 Tune-up power tolerance 49
9.2 SAR test results 50
9.2.1 Results overview of GSM850 53
9.2.2 Results overview of GSM1900 54
9.2.3 Results overview of UMTS Band II 55
9.2.4 Results overview of UMTS Band IV 56
9.2.5 Results overview of UMTS Band V 57
9.2.6 Results overview of LTE Band II 58

9.2.7 Results overview of LTE Band IV 59
9.2.8 Results overview of LTE Band V 60
9.2.9 Results overview of LTE Band VII 61
9.2.10 Results overview of LTE Band XXXVIII 62
9.2.11 Results overview of LTE Band XLI 63
9.2.12 Results overview of Wi-Fi 2.4G 64
10 Multiple Transmitter Information 65
10.1.1 Stand-alone SAR test exclusion 67
10.1.2 Simultaneous Transmission Possibilities 68
10.1.3 SAR Summation Scenario 69
11 Measurement uncertainty evaluation 76
11.1 Measurement uncertainty evaluation for SAR test 76
11.2 Measurement uncertainty evaluation for system check 78
12 Test equipment and ancillaries used for tests 80
Annex A: System performance verification 81
Annex B: Measurement results 81
Annex C: Calibration reports 81
Annex D: Photo documentation 82

Modified History

REV.	Modification Description	Issued Date	Remark
REV.1.0	Initial Test Report Relesse	10 December 2021	Wang Fengbing

1 General information

1.1 Notes

The test results of this test report relate exclusively to the test item specified in this test report. Shenzhen Timeway Testing Laboratories does not assume responsibility for any conclusions and generalisations drawn from the test results with regard to other specimens or samples of the type of the equipment represented by the test item. The test report is not to be reproduced or published in full without the prior written permission.

1.2 Application details

Date of receipt of test item: 2021-11-18
Start of test: 2017-11-28
End of test: 2017-12-05

1.3 Statement of Compliance

The maximum results of Specific Absorption Rate (SAR) found during testing for X6511E is as below:

Band	Position	MAX Reported SAR_{1g} (W/kg)
GSM850	Head	0.458
	Body & Hotspot 10mm	0.129
GSM1900	Head	**0.746**
	Body & Hotspot 10mm	0.200
UMTS Band II	Head	0.653
	Body & Hotspot 10mm	0.242
UMTS Band IV	Head	0.727
	Body & Hotspot 10mm	0.278
UMTS Band V	Head	0.473
	Body & Hotspot 10mm	0.149
LTE Band II	Head	0.454
	Body & Hotspot 10mm	0.255
LTE Band IV	Head	0.661
	Body & Hotspot 10mm	0.258
LTE Band V	Head	0.305
	Body & Hotspot 10mm	0.161
LTE Band VII	Head	0.505
	Body & Hotspot 10mm	**0.315**
LTE Band XXXVIII	Head	0.393
	Body & Hotspot 10mm	0.283
LTE Band XLI	Head	0.099
	Body & Hotspot 10mm	0.228
Wi-Fi 2.4G	Head	0.264
	Body & Hotspot 10mm	0.127
The highest simultaneous SAR is 1.010W/kg per KDB690783 D01		

The device is in compliance with Specific Absorption Rate （SAR）for general population/uncontraolled exposure limits of 1.6 W/Kg as averaged over any 1g tissue according to the FCC rule §2.1093, the ANSI/IEEE C95.1:2005, the NCRP Report Number 86 for uncontrolled environment, according to the Industry Canada Radio Standards Specification RSS-102 for General Population/Uncontrolled exposure, and had been tested in accordance with the measurement methods and procedures specified in IEEE Std 1528-2013.

1.4 EUT Information

Device Information:			
Product Type:	Mobile Phone		
Model:	X6511E		
Trade Name:	Infinix		
Device Type:	Portable device		
Exposure Category:	uncontrolled environment / general population		
Production Unit or Identical Prototype:	Production Unit		
Hardware version:	V1.0		
Software version :	N/A		
Antenna Type :	Internal Antenna		
Device Operating Configurations:			
Supporting Mode(s) :	GSM850,PCS1900, UMTS Band II, UMTS Band IV ,UMTS Band V,LTE Band II, LTE Band IV , LTE Band V, LTE Band VII , LTE Band XXXVIII , LTE Band XLI, Wi-Fi , BT		
Modulation:	GSM(GMSK),UMTS(QPSK/16QAM),LTE(QPSK/16QAM), WiFi(OFDM/CCK),BT(GFSK/π/4-DQPSK/ 8-DPSK)		
Device Class :	Class B, No DTM Mode		
Operating Frequency Range(s)	Band	TX(MHz)	RX(MHz)
	GSM850	824~849	869~894
	GSM1900	1850~1910	1930~1990
	UMTS Band II	1850~1910	1930~1990
	UMTS Band IV	1710~1755	2110~2155
	UMTS Band V	824~849	869~894
	LTE Band II	1850~1910	1930~1990

	LTE Band IV	1710~1755	2110~2155
	LTE Band V	824~849	869~894
	LTE Band VII	2500~2570	2620~2690
	LTE Band XXXVIII	2570~2620	2570~2620
	LTE Band XLI	2496~2690	2496~2690
	Wi-Fi (2.4G)	2412-2462	
	BT	2402~2480	
GPRS class level:	GPRS class 12		
Test Channels (low-mid-high):	128-190-251(GSM850)		
	512-661-810(GSM1900)		
	9262-9400-9538(UMTS Band II)		
	1312-1413-1513(UMTS Band IV)		
	4132-4182-4233(UMTS Band V)		
	18700-18900-19100(LTE Band II)		
	20050-20175-20300(LTE Band IV)		
	20450-20525-20600(LTE Band V)		
	21350-21100-21350(LTE Band VII)		
	37850-38000-38150 (LTE Band XXXVIII)		
	39750-39948-40740(LTE Band XLI)		
	1-6-11 (Wi-Fi 2.4G)		
	802.11a/n/ac 20M: 36-40-44-48-52-56-60-64		
	0-39-78(BT) 0-19-39(BLE)		
Power Source:	3.85 VDC/4900mAh/4500mAh(min/typ) Rechargeable Battery		

2 Testing laboratory

Test Site	QTC Certification & Testing Co., Ltd.
Test Location	2nd Floor,Bl Building,Fengyeyuan Industrial Plant,, Liuxian 2st. Road, Xin'an Street, Bao'an District,,Shenzhen,518000
Telephone	+86-755-26996144 EXT:8164
Fax	+86-755-26996253

3 Test Environment

	Required	Actual
Ambient temperature:	18 – 25 °C	22 ± 2 °C
Tissue Simulating liquid:	22 ± 2 °C	22 ± 2 °C
Relative humidity content:	30 – 70 %	30 – 70 %

4 Applicant and Manufacturer

Applicant/Client Name:	INFINIX MOBILITY LIMITED
Applicant Address:	FLAT 39 8/F BLOCK D WAH LOK INDUSTRIAL CENTRE 31-35 SHAN MEI STREET FOTAN NT
Manufacturer Name:	SHENZHEN TECNO TECHNOLOGY CO.,LTD.
Manufacturer Address:	101,Building 24,Waijing Industrial Park,Fumin Community,Fucheng Street,Longhua District,Shenzhen City,P.R.China

5 Test standard/s:

ANSI Std C95.1-2005	Safety Levels with Respect to Human Exposure to Radio Frequency Electromagnetic Fields, 3 kHz to 300 GHz.
IEEE Std 1528-2013	Recommended Practice for Determining the Peak Spatial-Average Specific Absorption Rate (SAR) in the Human Head from Wireless Communications Devices: Measurement Techniques
RSS-102	Radio Frequency Exposure Compliance of Radiocommunication Apparatus (All Frequency Bands (Issue 5 March 2015)
KDB447498 D01	General RF Exposure Guidance v06
KDB648474 D04	Head set SAR v01r03
KDB941225 D06	Hot Spot SAR V02r01
KDB941225 D01	3G SAR Measurement Procedures
KDB248227 D01	SAR meas for 802.11 a/b/g v02r02
KDB865664 D01	SAR Measurement 100 MHz to 6 GHz v01r04
KDB865664 D02	RF Exposure Reporting v01r02
KDB 941225 D05	SAR Evaluation Considerations for LTE Devices
KDB941225 D05A	LTE Rel.10 KDB Inquiry Sheet v01r02

5.1 RF exposure limits

Human Exposure	Uncontrolled Environment General Population	Controlled Environment Occupational
Spatial Peak SAR* (Brain/Body/Arms/Legs)	**1.60 mW/g**	8.00 mW/g
Spatial Average SAR** (Whole Body)	0.08 mW/g	0.40 mW/g
Spatial Peak SAR*** (Heads/Feet/Ankle/Wrist)	4.00 mW/g	20.00 mW/g

The limit applied in this test report is shown in bold letters

Notes:

* The Spatial Peak value of the SAR averaged over any 1 gram of tissue (defined as a tissue volume in the shape of a cube) and over the appropriate averaging time.

** The Spatial Average value of the SAR averaged over the whole body.

*** The Spatial Peak value of the SAR averaged over any 10 grams of tissue (defined as a tissue volume in the shape of a cube) and over the appropriate averaging time.

Uncontrolled Environments are defined as locations where there is the exposure of individuals who have no knowledge or control of their exposure.

Controlled Environments are defined as locations where there is exposure that may be incurred by persons who are aware of the potential for exposure, (i.e. as a result of employment or occupation.

5.2 SAR Definition

Specific Absorption Rate is defined as the time derivative (rate) of the incremental energy (dW) absorbed by(dissipated in) an incremental mass (dm) contained in a volume element (dV) of a given density (ρ).

$$SAR = \frac{d}{dt}\left(\frac{dW}{dm}\right) = \frac{d}{dt}\left(\frac{dW}{\rho dV}\right)$$

SAR is expressed in units of watts per kilogram (W/kg). SAR can be related to the electric field at a point by

$$SAR = \frac{\sigma |E|^2}{\rho}$$

where:

σ = conductivity of the tissue (S/m)

ρ = mass density of the tissue (kg/m^3)

E = rms electric field strength (V/m)

6 SAR Measurement System

6.1 The Measurement System

Comosar is a system that is able to determine the SAR distribution inside a phantom of human being according to different standards. The Comosar system consists of the following items:

- Main computer to control all the system
- 6 axis robot
- Data acquisition system
- Miniature E-field probe
- Device holder
- Head simulating tissue

The following figure shows the system.

The EUT under test operating at the maximum power level is placed in the phone holder, under the phantom, which is filled with head simulating liquid. The E-Field probe measures the electric field inside the phantom. The OpenSAR software computes the results to give a SAR value in a 1g or 10g mass.

6.2 Robot

The COMOSAR system uses the high precision robots KR 6 R900 sixx type out of the newer series from Satimo SA (France).For the 6-axis controller COMOSAR system, the KUKA robot controller version from Satimo is used. The KR 6 R900 sixx robot series have many features that are important for
our application:

- High precision (repeatability 0.02 mm)
- High reliability (industrial design)
- Jerk-free straight movements
- Low ELF interference (the closed metallic construction shields against motor control fields)
- 6-axis controller

6.3 Probe

For the measurements the Specific Dosimetric E-Field Probe SSE 5 with following specifications is used

Figure 1 – MVG COMOSAR Dosimetric E field Dipole

- Dynamic range: 0.01-100 W/kg

Probe Length	330 mm
Length of Individual Dipoles	4.5 mm
Maximum external diameter	8 mm
Probe Tip External Diameter	5 mm
Distance between dipoles / probe extremity	2.7 mm

- Calibration range: 300MHz to 3GHz for head & body simulating liquid.

Angle between probe axis (evaluation axis) and suface normal line:less than 30°

Figure 2 – MVG COMOSAR Dosimetric E field Dipole

Dynamic range: 0.01-100 W/kg

Probe Length	330 mm
Length of Individual Dipoles	2 mm
Maximum external diameter	8 mm
Probe Tip External Diameter	2.5 mm
Distance between dipoles / probe extremity	1 mm

- Calibration range: 5GHz to 6GHz for head & body simulating liquid.

Angle between probe axis (evaluation axis) and suface normal line:less than 30°

6.4 Measurement procedure

The following steps are used for each test position

- Establish a call with the maximum output power with a base station simulator.The connection between the mobile and the base station simulator is established via air interface.
- Measurement of the local E-field value at a fixed location.This value serves as a reference value for calculating a possible power drift.
- Measurement of the SAR distribution with a grid of 8 to 16 mm * 8 to 16 mm and a constant distance to the inner surface of the phantom.Since the sensors can not directly measure at the inner phantom surface,the values between the sensors and the inner phantom surface are extrapolated.With these values the area of the maximum SAR is calculated by an interpolation scheme.
- Around this point,a cube of 30 * 30 * 30 mm or 32 * 32 * 32 mm is assessed by measuring 5 or 8 * 5 or 8 * 4 or 5 mm.With these data,the peak spatial-average SAR value can be calculated.

Spatial Peak SAR Evaluation

The procedure for spatial peak SAR evaluation has been implemented according to the test standard. It can be conducted for 1g and 10g, as well as for user-specific masses. The SATIMO software includes all numerical procedures necessary to evaluate the spatial peak SAR value.

The base for the evaluation is a "cube" measurement. The measured volume must include the 1g and 10g cubes with the highest averaged SAR values. For that purpose, the center of the measured volume is aligned to the interpolated peak SAR value of a previously performed area scan.

The entire evaluation of the spatial peak values is performed within the post-processing engine. The system always gives the maximum values for the 1g and 10g cubes. The algorithm to find the cube with highest averaged SAR is divided into the following stages:

(a) Extraction of the measured data (grid and values) from the Zoom Scan
(b) Calculation of the SAR value at every measurement point based on all stored data (A/D values and measurement parameters)
(c) Generation of a high-resolution mesh within the measured volume
(d) Interpolation of all measured values form the measurement grid to the high-resolution grid
(e) Extrapolation of the entire 3-D field distribution to the phantom surface over the distance from sensor to surface
(f) Calculation of the averaged SAR within masses of 1g and 10g

SAR Averaged Methods

In SATIMO, the interpolation and extrapolation are both based on the modified Quadratic Shepard's method. The interpolation scheme combines a least-square fitted function method and a weighted average method which are the two basic types of computational interpolation and approximation.

Extrapolation routines are used to obtain SAR values between the lowest measurement points and the inner phantom surface. The extrapolation distance is determined by the surface detection distance and the probe sensor offset. The uncertainty increases with the extrapolation distance. To keep the uncertainty within 1% for the 1 g and 10 g cubes, the extrapolation distance should not be larger than 5 mm.

6.5 Description of interpolation/extrapolation scheme

- The local SAR inside the phantom is measured using small dipole sensing elements inside a probe body.The probe tip must not be in contact with the phantom surface in order to minimise measurements errors,but the highest local SAR will occur at the surface of the phantom.

- An extrapolation is using to determinate this highest local SAR values.
  The extrapolation is based on afourth-order least-square polynomial fit of measured data.The local SAR value is then extrapolated from the liquid surface with a 1 mm step.

- The measurements have to be performed over a limited time(due to the duration of the battery) so the step of measurement is high.It could vary between 5 and 8 mm.To obtain an accurate assessment of the maximum SAR average over 10 grams and 1gram requires a very fine resolution in the three dimensional scanned data array.

6.6 Phantom

For the measurements the Specific Anthropomorphic Mannequin (SAM) defined by the IEEE SCC-34/SC2 group is used. The phantom is a polyurethane shell integrated in a wooden table. The thickness of the phantom amounts to 2mm +/- 0.2mm. It enables the dosimetric evaluation of left and right phone usage and includes an additional flat phantom part for the simplified performance check. The phantom set-up includes a cover, which prevents the evaporation of the liquid.

System Material	Permittivity	Loss Tangent
Delrin	3.7	0.005

6.7 Device Holder

The positioning system allows obtaining cheek and tilting position with a very good accuracy. In compliance with CENELEC, the tilt angle uncertainty is lower than 1°.

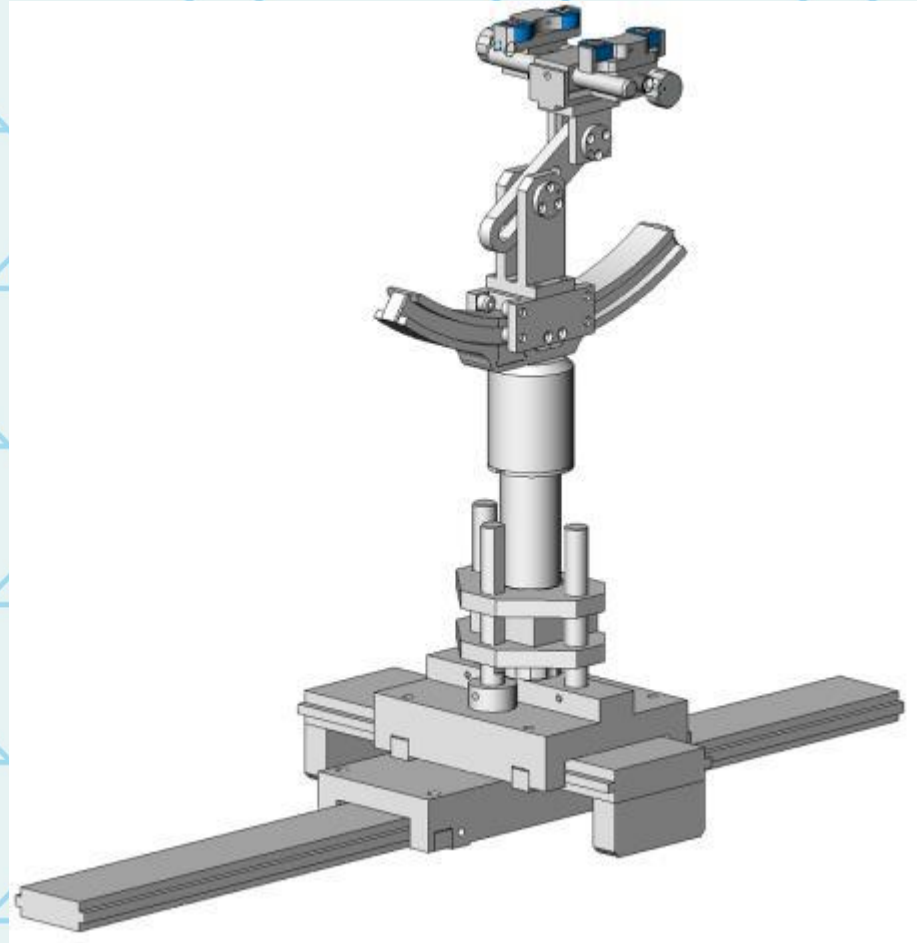

Device holder

System Material	Permittivity	Loss Tangent
Delrin	3.7	0.005

6.8 Video Positioning System

- The video positioning system is used in OpenSAR to check the probe. Which is composed of a camera, LED, mirror and mechanical parts. The camera is piloted by the main computer with firewire link.

- During the process, the actual position of the probe tip with respect to the robot arm is measured, as well as the probe length and the horizontal probe offset. The software then corrects all movements, such that the robot coordinates are valid for the probe tip.

- The repeatability of this process is better than 0.1 mm. If a position has been taught with an aligned probe, the same position will be reached with another aligned probe within 0.1 mm, even if the other probe has different dimensions. During probe rotations, the probe tip will keep its actual position.

6.9 Tissue simulating liquids: dielectric properties

For SAR measurement of the field distribution inside the phantom, the phantom must be filled with homogeneous tissue simulating liquid to a depth of at least 15 cm. For head SAR testing, the liquid height from the ear reference point (ERP) of the phantom to the liquid top surface is larger than 15 cm. For body SAR testing, the liquid height from the center of the flat phantom to the liquid top surface is larger than 15 cm. The simulating liquids should be checked at the beginning of a series of SAR measurements to determine of the dielectic parameter are within the tolerances of the specified target values. The measured conductivity and relative permittivity should be within ± 5% of the target values.

The following materials are used for producing the tissue-equivalent materials.
(Liquids used for tests are marked with☒):

Ingredients(% of weight)	**Frequency (MHz)**					
frequency band	☐ 750	☒ 835	☒ 1800	☒ 1900	☒ 2450	☒ 2600
Tissue Type	Head	Head	Head	Head	Head	Head
Water	39.2	41.45	52.64	55.242	62.7	55.242
Salt (NaCl)	2.7	1.45	0.36	0.306	0.5	0.306
Sugar	57.0	56.0	0.0	0.0	0.0	0.0
HEC	0.0	1.0	0.0	0.0	0.0	0.0
Bactericide	0.0	0.1	0.0	0.0	0.0	0.0
Triton X-100	0.0	0.0	0.0	0.0	36.8	0.0
DGBE	0.0	0.0	47.0	44.542	0.0	44.452
Ingredients(% of weight)	**Frequency (MHz)**					
frequency band	☐ 750	☒ 835	☒ 1800	☒ 1900	☒ 2450	☒ 2600
Tissue Type	Body	Body	Body	Body	Body	Body
Water	50.30	52.4	69.91	69.91	73.2	64.493
Salt (NaCl)	1.60	1.40	0.13	0.13	0.04	0.024
Sugar	47.0	45.0	0.0	0.0	0.0	0.0
HEC	0.0	1.0	0.0	0.0	0.0	0.0
Bactericide	0.0	0.1	0.0	0.0	0.0	0.0
Triton X-100	0.0	0.0	0.0	0.0	0.0	0.0
DGBE	0.0	0.0	29.96	29.96	26.7	32.252

Salt: 99+% Pure Sodium Chloride
Sugar: 98+% Pure Sucrose
Water: De-ionized, 16MΩ+ resistivity
HEC: Hydroxyethyl Cellulose
DGBE: 99+% Di(ethylene glycol) butyl ether, [2-(2-butoxyethoxy)ethanol]
Triton X-100(ultra pure): Polyethylene glycol mono [4-(1,1,3,3-tetramethylbutyl)phenyl]ether

6.10 Tissue simulating liquids: parameters

Please Contact with WSCT
www.wsct-cert.com

Tissue Type	Measured Frequency (MHz)	Target Tissue				Measured Tissue		Liquid Temp.	Test Date
		Target Permittivity ε_r	Range of ±5%	Target Conductivity σ (S/m)	Range of ±5%	ε_r	σ (S/m)		
835MHz Head	825	41.60	39.52~43.68	0.90	0.86~0.95	40.34	0.91	21.6°C	2021-11-28
	835	41.50	39.43~43.58	0.90	0.86~0.95	40.33	0.92		
	850	41.50	39.43~43.58	0.92	0.87~0.97	40.11	0.94		
835MHz Body	825	55.20	52.44~57.96	0.97	0.92~1.02	54.04	0.98		
	835	55.20	52.44~57.96	0.97	0.92~1.02	53.93	0.99		
	850	55.20	52.44~57.96	0.99	0.94~1.04	53.69	1.01		
1800MHz Head	1710	40.10	38.10~42.10	1.35	1.28~1.42	39.95	1.34	21.6°C	2021-11-25
	1730	40.10	38.10~42.10	1.35	1.29~1.43	39.87	1.36		
	1750	40.10	38.10~42.10	1.37	1.30~1.44	39.69	1.39		
	1800	40.00	38.00~42.00	1.40	1.33~1.47	39.48	1.44		
1800MHz Body	1710	53.50	50.83~56.18	1.46	1.39~1.53	53.24	1.45		
	1730	53.50	50.83~56.18	1.48	1.41~1.55	53.39	1.47		
	1750	53.40	50.73~56.07	1.49	1.42~1.56	53.19	1.49		
	1800	53.30	50.64~55.97	1.52	1.44~1.60	52.97	1.54		
1900MHz Head	1850	40.00	38.00~42.00	1.40	1.33~1.47	39.93	1.37	21.6°C	2021-11-30
	1880	40.00	38.00~42.00	1.40	1.33~1.47	39.91	1.40		
	1900	40.00	38.00~42.00	1.40	1.33~1.47	39.98	1.41		
	1910	40.00	38.00~42.00	1.40	1.33~1.47	39.97	1.42		
1900MHz Body	1850	53.30	50.64~55.97	1.52	1.44~1.60	53.23	1.49		
	1880	53.30	50.64~55.97	1.52	1.44~1.60	53.36	1.53		
	1900	53.30	50.64~55.97	1.52	1.44~1.60	53.37	1.56		
	1910	53.30	50.64~55.97	1.52	1.44~1.60	53.37	1.57		

2450MHz Head	2410	39.30	37.34~41.26	1.76	1.67~1.85	39.22	1.78	21.6°C	2021-12-03
	2435	39.20	37.24~41.16	1.79	1.70~1.88	39.25	1.77		
	2450	39.20	37.24~41.16	1.80	1.71~1.89	39.24	1.76		
	2460	39.20	37.24~41.16	1.81	1.72~1.90	39.20	1.76		
2450MHz Body	2410	52.80	50.16~55.44	1.91	1.81~2.00	52.72	1.92		
	2435	52.70	50.07~55.34	1.94	1.84~2.04	52.75	1.92		
	2450	52.70	50.07~55.34	1.95	1.85~2.05	52.74	1.91		
	2460	52.70	50.07~55.34	1.96	1.86~2.06	52.70	1.91		
2600MHz Head	2510	39.00	37.05~40.95	1.96	1.86~2.06	38.87	1.93	21.6°C	2021-12-05
	2535	39.00	37.05~40.95	1.96	1.86~2.06	38.58	1.93		
	2560	39.00	37.05~40.95	1.96	1.86~2.06	38.98	2.02		
	2600	39.00	37.05~40.95	1.96	1.86~2.06	52.50	2.02		
2600MHz Body	2510	52.50	49.90~55.11	2.16	2.05~2.27	52.21	2.05		
	2535	52.50	49.90~55.11	2.16	2.05~2.27	51.92	2.06		
	2560	52.50	49.90~55.11	2.16	2.05~2.27	52.01	2.09		
	2600	52.50	49.90~55.11	2.16	2.05~2.27	38.87	1.93		
ε_r= Relative permittivity, σ= Conductivity									

7 System Check

7.1 System check procedure

The System check is performed by using a System check dipole which is positioned parallel to the planar part of the SAM phantom at the reference point. The distance of the dipole to the SAM phantom is determined by a spacer. The dipole is connected to the signal source consisting of signal generator and amplifier via a directional coupler, N-connector cable and adaption to SMA. It is fed with a power of 100 mW. To adjust this power a power meter is used. The power sensor is connected to the cable before the System check to measure the power at this point and do adjustments at the signal generator. At the outputs of the directional coupler both return loss as well as forward power are controlled during the validation to make sure that emitted power at the dipole is kept constant. This can also be checked by the power drift measurement after the test (result on plot).

System check results have to be equal or near the values determined during dipole calibration (target SAR in table above) with the relevant liquids and test system.

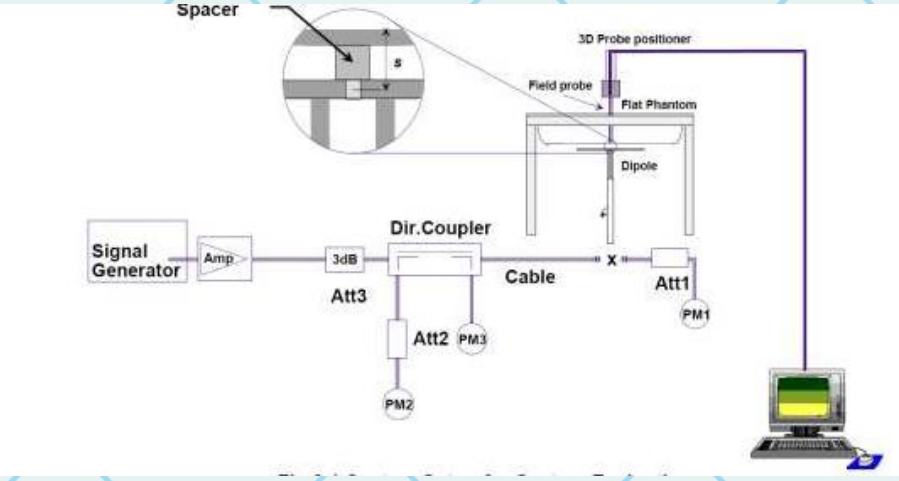

7.2 System check results

The system Check is performed for verifying the accuracy of the complete measurement system and performance of the software.The following table shows System check results for all frequency bands and tissue liquids used during the tests (plot(s) see annex A).

System Check	Target SAR (1W) (+/-10%)				Measured SAR (Normalized to 1W)		Liquid Temp.	Test Date
	1-g (W/g)	Range of ±10% 1-g (W/g)	10-g (W/g)	Range of ±10% 10-g (W/g)	1-g (W/g)	10-g (W/g)		
D835V2 Head	9.82	8.84~10.80	6.35	5.72~6.99	9.700	6.150	21.6°C	2021/11/28
D1800V2 Head	37.09	33.38~40.80	19.77	17.93~21.75	39.980	20.600	21.6°C	2021/11/25
D1900V2 Head	38.93	35.04~42.82	20.27	18.45~22.55	39.980	21.070	21.6°C	2021/11/30
D2450V2 Head	53.41	48.07~58.75	23.95	21.56~26.35	53.930	24.530	21.6°C	2021/12/03
D2600V2 Head	56.88	51.20~62.56	24.92	22.43~27.41	53.180	23.430	21.6°C	2021/12/05
D835V2 Body	9.41	8.47~10.35	6.22	5.99~6.84	10.150	6.450	21.6°C	2021/11/28
D1800V2 Body	38.03	34.23~41.83	20.69	18.62~22.76	41.560	21.720	21.6°C	2021/11/25
D1900V2 Body	38.73	34.86~42.60	20.48	18.43~22.53	39.330	20.940	21.6°C	2021/11/30
D2450V2 Body	51.39	46.25~56.53	23.63	21.27~25.99	54.330	23.330	21.6°C	2021/12/03
D2600V2 Body	54.54	49.09~59.99	24.37	21.94~26.80	57.860	25.600	21.6°C	2021/12/05
Note: All SAR values are normalized to 1W forward power.								

Note: 5G band system check USES standard waveguide, so the test results are standard en62209-2 table B2

8 SAR Test Test Configuration

8.1 GSM Test Configurations

SAR tests for GSM850 and GSM1900, a communication link is set up with a base station by air link. Using CMU200 the power lever is set to “5”and “0” in SAR of GSM850 and GSM1900. The tests in the band of GSM 850 and GSM 1900 are performed in the mode of GPRS/EGPRS function. Since the GPRS class is 12 for this EUT, it has at most 4 timeslots in uplink and at most 4 timeslots in downlink, the maximum total timeslot is 5.

When SAR tests for EGPRS mode is necessary, GMSK modulation should be used to minimize SAR measurement error due to higher peak-to-average power (PAR) ratios inherent in 8-PSK.

8.2 UMTS Test Configuration

1) Output Power Verification

Maximum output power is verified on the high, middle and low channels according to procedures described in section 5.2 of 3GPP TS 34.121, using the appropriate RMC or AMR with TPC (transmit power control) set to all “1‟s” for WCDMA/HSDPA or by applying the required inner loop power control procedures to maintain maximum output power while HSUPA is active. Results for all applicable physical channel configurations (DPCCH, DPDCHn and spreading codes, HSDPA, HSPA) are requied in the SAR report. All configurations that are not supported by the Headset or cannot be measured due to technical or equipment limitations must be clearly identified.

2) WCDMA

a. Head SAR Measurements

SAR for next to the ear head exposure is measured using a 12.2 kbps RMC with TPC bits configured to all “1‟s”. The 3G SAR test reduction procedure is applied to AMR configurations with 12.2 kbps RMC as the primary mode. Otherwise, SAR is measured for 12.2 kbps AMR in 3.4 kbps SRB (signaling radio bearer) using the highest reported SAR configuration in 12.2 kbps RMC for head exposure.

b. Body SAR Measurements

SAR for body-worn accessory configurations is measured using a 12.2 kbps RMC with TPC bits configured to all “1‟s”. The 3G SAR test reduction procedure is applied to other spreading codes and multiple DPDCHn configurations supported by the Headset with 12.2 kbps RMC as the primary mode

3) HSDPA

SAR for body exposure configurations is measured according to the “Body SAR Measurements‟” procedures of 3G device. When the maximum output power and tune-up tolerance specified for production units in a secondary mode is ≤ ¼ dB higher than the primary mode or when the highest reported SAR of the primary mode is scaled by the ratio of specified maximum output power and tune-up tolerance of secondary to primary mode and the adjusted SAR is ≤ 1.2 W/kg, SAR measurement is not required for the secondary mode. This is referred to as the 3G SAR test reduction procedure in the following SAR test guidance, where the primary mode is identified in

the applicable wireless mode test procedures and the secondary mode is wireless mode being considered for SAR test reduction by that procedure. When the 3G SAR test reduction procedure is not satisfied, it is identified as “otherwise” in the applicable procedures; SAR measurement is required for the secondary mode.

Per KDB941225 D01, the 3G SAR test reduction procedure is applied to HSDPA body configurations with 12.2 kbps RMC as the primary mode. Otherwise, SAR is measured for HSDPA using the HSDPA body SAR procedures for the highest reported SAR body exposure configuration in 12.2 kbps RMC.

HSDPA should be configured according to UE category of a test device. The number of HS-DSCH/HS-PDSCHs, HAPRQ processes, minimum inter-TTI interval, transport block sizes and RV coding sequence are defined by the H-set. To maintain a consistent test configuration and stable transmission condition, QPSK is used in the H-set for SAR testing. HS-DPCCH should be configured with a CQI feedback cycle of 4ms with a CQI repetition factor of 2 to maintain a constant rate of active CQI slots. The β c andβ d gain factors for DPCCH and DPDCH were set according to the values in the below table, □ hs for HS-DPCCH is set automatically to the correct value when ΔACK, ΔNACK, ΔCQI = 8. The variation of the β c /β d ratio causes a power reduction at sub-tests 2 - 4.

Sub-test	β_c	β_d	β_d (SF)	β_c/β_d	β_{hs} (1)	CM(dB)(2)	MPR (dB)
1	2/15	15/15	64	2/15	4/15	0.0	0
2	12/15(3)	15/15(3)	64	12/15(3)	24/15	1.0	0
3	15/15	8/15	64	15/8	30/15	1.5	0.5
4	15/15	4/15	64	15/4	30/15	1.5	0.5

Note 1: ΔACK, ΔNACK and ΔCQI = 8 $A_{hs} = \beta_{hs}/\beta_c = 30/15$ $\beta_{hs} = 30/15 * \beta_c$

Note 2 : CM=1 for β_c/β_d= 12/15, β_{hs}/β_c = 24/15. For all other combinations of DPDCH,DPCCH and HS-DPCCH the MPR is based on the relative CM difference. This is applicable for only UEs that support HSDPA in release 6 and later releases.

Note 3 : For subtest 2 the β_c/β_d ratio of 12/15 for the TFC during the measurement period (TF1, TF0) is achieved by setting the signalled gain factors for the reference TFC (TF1,TF1) to β_c = 11/15 and β_d = 15/15

The measurements were performed with a Fixed Reference Channel (FRC) and H-Set 1 QPSK.:

Parameter	Value
Nominal average inf. bit rate	534 kbit/s
Inter-TTI Distance	3 TTI's
Number of HARQ Processes	2 Processes
Information Bit Payload	3202 Bits
MAC-d PDU size	336 Bits
Number Code Blocks	1 Block
Binary Channel Bits Per TTI	4800 Bits
Total Available SMLs in UE	19200 SMLs
Number of SMLs per HARQ Process	9600 SMLs
Coding Rate	0.67
Number of Physical Channel Codes	5

4)HSUPA

SAR for body exposure configurations is measured according to the “Body SAR Measurements"" procedures of 3G device. When the maximum output power and tune-up tolerance specified for production units in a secondary mode is ≤ ¼ dB higher than the primary mode or when the highest reported SAR of the primary mode is scaled by the ratio of specified maximum output power and tune-up tolerance of secondary to primary mode and the adjusted SAR is ≤ 1.2 W/kg, SAR measurement is not required for the secondary mode.

Per KDB941225 D01v03, the 3G SAR test reduction procedure is applied to HSPA (HSUPA/HSDPA with RMC) body configurations with 12.2 kbps RMC as the primary mode. Otherwise, SAR is measured for HSPA using the HSPA body SAR procedures for the highest reported body exposure SAR configuration in 12.2 kbps RMC.

8.3 LTE Test Configuration

SAR for LTE band exposure configurations is measured according to the procedures of KDB 941225 D05 SAR for LTE Devices. The CMW500 WideBand Radio Communication Tester was used for LTE output power measurements and SAR testing. Closed loop power control was used so the UE transmits with maximum output power during SAR testing.SAR test were performed with the same number of RB and RB offsets transmitting on all TTI frames(Maximum TTI)

1) Spectrum Plots for RB configurations

A properly configured base station simulator was used for LTE output power measurements and SAR testing.Therefore, spectrum plots for RB configurations were not required to be included in this report.

2) MPR

When MPR is implemented permanently within the UE, regardless of network requirements, only those RB configurations allowed by 3GPP for the channel bandwidth and modulation combinations may be tested with MPR active. Configurations with RB allocations less than the RB thresholds required by 3GPP must be tested without MPR.

The allowed Maximum Power Reduction (MPR) for the maximum output power due to higher order modulation and transmit bandwidth configuration (resource blocks) is specified in Table 6.2.3-1 of the 3GPP TS36.101.

Table 6.2.3-1: Maximum Power Reduction (MPR) for Power Class 3

Modulation	Channel bandwidth / Transmission bandwidth (RB)						MPR (dB)
	1.4 MHz	3.0 MHz	5 MHz	10 MHz	15 MHz	20 MHz	
QPSK	> 5	> 4	> 8	> 12	> 16	> 18	≤ 1
16 QAM	≤ 5	≤ 4	≤ 8	≤ 12	≤ 16	≤ 18	≤ 1
16 QAM	> 5	> 4	> 8	> 12	> 16	> 18	≤ 2

3) A-MPR

A-MPR(Additional MPR) has been disabled for all SAR tests by using Network Signalling Value of “NS_01”on the base station simulator.

4) LTE procedures for SAR testing

A) Largest channel bandwidth standalone SAR test requirements

i) QPSK with 1 RB allocation

Start with the largest channel bandwidth and measure SAR for QPSK with 1 RB allocation, using the RB offset and required test channel combination with the highest maximum output power for RB offsets at the upper edge, middle and lower edge of each required test channel. When the reported SAR is ≤ 0.8 W/kg, testing of the remaining RB offset configurations and required test channels is not required for 1 RB allocation; otherwise, SAR is required for the remaining required test channels and only for the RB offset configuration with the highest output power for that channel. When the reported SAR of a required test channel is > 1.45 W/kg, SAR is required for all three RB offset configurations for that required test channel.

ii) QPSK with 50% RB allocation

The procedures required for 1 RB allocation in i) are applied to measure the SAR for QPSK with 50% RB allocation.

iii) QPSK with 100% RB allocation

For QPSK with 100% RB allocation, SAR is not required when the highest maximum output power for 100 % RB allocation is less than the highest maximum output power in 50% and 1 RB allocations and the highest reported SAR for 1 RB and 50% RB allocation in i) and ii) are ≤ 0.8 W/kg. Otherwise, SAR is measured for the highest output power channel and if the reported SAR is > 1.45 W/kg, the remaining required test channels must also be tested.

iv) Higher order modulations

For each modulation besides QPSK; e.g., 16-QAM, 64-QAM, apply the QPSK procedures in above sections to determine the QAM configurations that may need SAR measurement. For each configuration identified as required for testing, SAR is required only when the highest maximum output power for the configuration in the higher order modulation is > ½ dB higher than the same configuration in QPSK or when the reported SAR for the QPSK configuration is > 1.45 W/kg.

B) Other channel bandwidth standalone SAR test requirements

For the other channel bandwidths used by the device in a frequency band, apply all the procedures required for the largest channel bandwidth in section A) to determine the channels and RB configurations that need SAR testing and only measure SAR when the highest maximum output power of a configuration requiring testing in the smaller channel bandwidth is > ½ dB higher than the equivalent channel configurations in the largest channel bandwidth configuration or the reported SAR of a configuration for the largest channel bandwidth is > 1.45 W/kg.

5) TDD LTE test configuration

According to KDB 941225 D05 SAR for LTE Devices v02r04, for Time-Division Duplex (TDD) systems, SAR must be tested using a fixed periodic duty factor according to the highest transmission duty factor implemented for the device and supported by the defined 3GPP LTE TDD configurations.

8.4 Wi-Fi Test Configuration

For the 802.11b/g SAR tests, a communication link is set up with the test mode software for Wi-Fi mode test. The Absolute Radio Frequency Channel Number(ARFCN) is allocated to 1 ,6 and 11 respectively in the case of 2450 MHz.During the test,at the each test frequency channel, the EUT is operated at the RF continuous emission mode. Each channel should be tested at the lowest data rate. 802.11b/g operating modes are tested independently according to the service requirements in each frquency band. 802.11b/g modes are tested on channel 1, 6, 11; however,if output power reduction is necessary for channels 1 and/or 11 to meet restricted band requirements the highest output channel closest to each of these channels must be tested instead.

SAR is not required for 802.11g/n channels when the maximum average output power is less than 0.25dB higher than that measured on the corresponding 802.11b channels.

Mode	Band	GHz	Channel	"Default Test Channels"	
				802.11b	802.11g
802.11b/g	2.4 GHz	2412	1#	√	△
		2437	6	√	△
		2462	11#	√	△

Notes:

√ = "default test channels"

△= possible 802.11g channels with maximum average output ¼ dB the "default test channels"

= when output power is reduced for channel 1 and /or 11 to meet restricted band requirements the highest output channels closest to each of these channels should be tested.

802.11 Test Channels per FCC Requirements

8.5 WiFi 2.4G SAR Test Procedures

Separate SAR procedures are applied to DSSS and OFDM configurations in the 2.4 GHz band to simplify DSSS test requirements. For 802.11b DSSS SAR measurements, DSSS SAR procedure applies to fixed exposure test position and initial test position procedure applies to multiple exposure test positions.

A)802.11b DSSS SAR Test Requirements

SAR is measured for 2.4 GHz 802.11b DSSS using either a fixed test position or, when applicable, the initial test position procedure. SAR test reduction is determined according to the following:

1) When the reported SAR of the highest measured maximum output power channel (section 3.1 of of KDB 248227D01v02) for the exposure configuration is ≤ 0.8 W/kg, no further SAR testing is required for 802.11b DSSS in that exposure configuration.

2) When the reported SAR is > 0.8 W/kg, SAR is required for that exposure configuration using the next highest measured output power channel. When any reported SAR is > 1.2 W/kg, SAR is required for the third channel; i.e., all channels require testing.

B) 2.4GHz 802.11g/n OFDM SAR Test Exclusion Requirements

When SAR measurement is required for 2.4 GHz 802.11g/n OFDM configurations, the measurement and test reduction procedures for OFDM are applied (section 5.3 of of KDB 248227D01v02r01). SAR is not required for the following 2.4 GHz OFDM conditions.

1) When KDB Publication 447498 SAR test exclusion applies to the OFDM configuration.

2) When the highest reported SAR for DSSS is adjusted by the ratio of OFDM to DSSS specified maximum output power and the adjusted SAR is ≤ 1.2 W/kg.

C) SAR Test Requirements for OFDM configurations

When SAR measurement is required for 802.11 g/n OFDM configurations, each standalone and frequency aggregated band is considered separately for SAR test reduction. In applying the initial test configuration and subsequent test configuration procedures, the 802.11 transmission configuration with the highest specified maximum output power and the channel within a test configuration with the highest measured maximum output power should be clearly distinguished to apply the procedures.

9 Detailed Test Results

9.1 Conducted Power measurements

The maximum conducted average power (Unit: dBm) including tune-up tolerance is shown as below.

9.1.1 Conducted Power of GSM850

GSM850(SIM1)		Burst-Averaged output Power (dBm)			Division Factors	Source Based time Average Power(dBm)		
		128CH	190CH	251CH		128CH	190CH	251CH
GSM(CS)		32.88	32.88	32.44	-9.03	23.85	23.85	23.41
GPRS (GMSK)	1 Tx Slot	32.85	32.46	32.36	-9.03	23.82	23.43	23.33
	2 Tx Slots	31.69	31.88	31.81	-6.02	25.67	25.86	25.79
	3 Tx Slots	29.68	29.60	29.86	-4.26	25.42	25.34	25.60
	4 Tx Slots	28.51	28.70	28.55	-3.01	**25.50**	**25.69**	**25.54**
EGPRS (8-PSK)	1 Tx Slot	32.85	32.46	32.36	-9.03	23.82	23.43	23.33
	2 Tx Slots	31.69	31.88	31.81	-6.02	25.67	25.86	25.79
	3 Tx Slots	29.68	29.60	29.86	-4.26	25.42	25.34	25.60
	4 Tx Slots	28.51	28.70	28.55	-3.01	25.50	25.69	25.54

Note: 1) The conducted power of GSM850 is measured with RMS detector.

2) Frame-averaged output power was calculated from the measured burst-averaged output power by converting the slot powers into linear units and calculating the energy over 8 timesolts.

3)The bolded GPRS 4Tx slots mode was selected for SAR testing according the highest Source Based time Average Power table.

4) channel /Frequency: 128/824.2; 190/836.6; 251/848.8

9.1.2 Conducted Power of GSM1900

GSM1900(SIM1)		Burst-Averaged output Power (dBm)			Division Factors	Source Based time Average Power(dBm)		
		512CH	661CH	810CH		512CH	661CH	810CH
GSM(CS)		29.90	29.83	29.30	-9.03	20.87	20.80	20.27
GPRS (GMSK)	1 Tx Slot	29.81	29.39	29.57	-9.03	20.78	20.36	20.54
	2 Tx Slots	28.65	28.56	28.67	-6.02	22.63	22.54	22.65
	3 Tx Slots	27.04	27.16	27.43	-4.26	22.78	22.90	23.17
	4 Tx Slots	26.72	26.36	26.96	-3.01	**23.71**	**23.35**	**23.95**
EGPRS (8-PSK)	1 Tx Slot	29.81	29.39	29.57	-9.03	20.78	20.36	20.54
	2 Tx Slots	28.65	28.56	28.67	-6.02	22.63	22.54	22.65
	3 Tx Slots	27.04	27.16	27.43	-4.26	22.78	22.90	23.17
	4 Tx Slots	26.72	26.71	26.96	-3.01	23.71	23.70	23.95

Note: 1) The conducted power of GSM1900 is measured with RMS detector.

2) Frame-averaged output power was calculated from the measured burst-averaged output power by converting the slot powers into linear units and calculating the energy over 8 timesolts.

3)The bolded GPRS 4Tx slots mode was selected for SAR testing according the highest Source Based time Average Power table.

4) channel /Frequency: 512/1850.2; 661/1880; 810/1909.8

9.1.3 Conducted Power of UMTS Band II

UMTS Band II		Conducted Power (dBm)		
		9262CH	9400CH	9538CH
WCDMA	12.2kbps RMC	21.62	21.93	22.41
HSDPA	Subtest 1	22.29	22.00	21.42
	Subtest 2	22.05	22.25	22.16
	Subtest 3	21.34	22.19	21.45
	Subtest 4	22.47	21.13	22.35
HSUPA	Subtest 1	22.44	21.29	21.48
	Subtest 2	21.96	21.23	21.89
	Subtest 3	22.23	21.21	21.27
	Subtest 4	21.09	22.29	22.00
	Subtest 5	21.42	22.05	22.24

Note: 1) channel /Frequency: 9262/1852.4, 9400/1880, 9538/1907.6

9.1.4 Conducted Power of UMTS Band IV

UMTS Band IV		Conducted Power (dBm)		
		1312CH	1413CH	1513CH
WCDMA	12.2kbps RMC	21.49	21.83	21.71
HSDPA	Subtest 1	21.26	22.48	22.16
	Subtest 2	21.21	22.55	21.96
	Subtest 3	21.63	21.28	21.88
	Subtest 4	21.14	22.40	21.44
HSUPA	Subtest 1	22.58	22.53	22.12
	Subtest 2	21.78	22.23	21.85
	Subtest 3	21.77	21.32	21.56
	Subtest 4	21.36	21.26	22.48
	Subtest 5	22.16	21.21	22.55

Note: 1) channel /Frequency: 1312/1712.4, 1413/1732.5, 1513/1752.6

9.1.5 Conducted Power of UMTS Band V

UMTS Band V		Conducted Power (dBm)		
		4132CH	4182CH	4233CH
WCDMA	12.2kbps RMC	22.33	21.77	21.35
HSDPA	Subtest 1	21.78	21.63	22.38
	Subtest 2	22.46	22.48	22.45
	Subtest 3	22.41	21.30	21.88
	Subtest 4	21.38	21.20	21.45
HSUPA	Subtest 1	22.46	22.16	21.44
	Subtest 2	21.30	22.51	21.76
	Subtest 3	22.67	21.84	21.35
	Subtest 4	21.79	21.78	21.63
	Subtest 5	22.38	22.46	22.48

Note: 1) channel /Frequency: 4132/826.4, 4182/836.4, 4233/846.6

9.1.6 Conducted Power of LTE Band II

Conducted Power of LTE Band II						
Bandwidth	Modulation	RB size	RB offset	Channel 18607	Channel 18900	Channel 19193
1.4MHz	QPSK	1	0	24.03	23.89	24.01
			3	24.17	24.07	24.16
			5	24.03	23.88	24.02
		3	0	21.29	20.77	21.11
			2	21.00	21.23	21.46
			3	21.24	21.25	21.31
		6	0	20.79	20.65	20.96
	16QAM	1	0	24.03	23.89	24.01
			3	20.68	20.79	21.12
			5	24.17	24.07	24.16
		3	0	20.68	20.76	21.34
			2	21.05	20.66	21.28
			3	21.41	20.75	21.12
		6	0	20.87	20.64	20.56
Bandwidth	Modulation	RB size	RB offset	Channel 18615	Channel 18900	Channel 19185
3MHz	QPSK	1	0	23.98	23.99	24.01
			7	24.27	24.26	24.37
			14	23.99	23.96	24.10
		8	0	20.69	20.51	21.00
			4	20.53	20.87	20.63
			7	21.02	20.96	21.46
		15	0	20.53	21.18	21.24
	16QAM	1	0	23.98	23.99	24.01
			7	21.14	20.64	20.86
			14	24.27	24.26	24.37
		8	0	20.73	20.93	21.34
			4	20.96	21.32	20.82
			7	20.99	21.32	21.30
		15	0	21.21	20.51	21.34

Conducted Power of LTE Band II

Bandwidth	Modulation	RB size	RB offset	Channel 18625	Channel 18900	Channel 19175
5MHz	QPSK	1	0	23.90	23.92	23.86
			13	24.41	24.29	24.32
			24	23.93	23.88	23.88
		12	0	21.37	20.61	21.30
			6	20.76	20.61	20.68
			13	20.67	21.12	21.44
		25	0	21.18	20.76	20.80
	16QAM	1	0	23.90	23.92	23.86
			13	24.41	24.29	24.32
			24	23.93	23.88	23.88
		12	0	21.23	21.32	20.80
			6	20.75	21.01	20.49
			13	21.27	21.27	20.80
		25	0	21.06	21.33	20.68

Bandwidth	Modulation	RB size	RB offset	Channel 18650	Channel 18900	Channel 19150
10MHz	QPSK	1	0	23.97	23.97	24.08
			25	24.10	24.11	24.17
			49	23.98	23.99	24.08
		25	0	21.16	20.88	21.12
			13	21.21	20.86	20.51
			25	21.15	21.39	21.19
		50	0	21.33	20.68	20.70
	16QAM	1	0	23.97	23.97	24.08
			25	21.29	20.52	20.77
			49	24.10	24.11	24.17
		25	0	21.23	21.33	21.20
			13	20.95	20.60	20.84
			25	20.86	20.94	21.21
		50	0	20.61	20.52	20.99

Conducted Power of LTE Band II

Bandwidth	Modulation	RB size	RB offset	Channel 18675	Channel 18900	Channel 19125
15MHz	QPSK	1	0	23.88	23.83	23.97
			38	24.25	24.36	24.25
			74	23.82	23.87	23.98
		36	0	20.71	20.51	21.21
			18	21.42	20.51	21.12
			39	21.06	21.31	20.64
		75	0	21.10	20.86	21.43
	16QAM	1	0	23.88	23.83	23.97
			38	24.25	24.36	24.25
			74	23.82	23.87	23.98
		36	0	20.88	20.51	20.49
			18	21.03	20.69	20.73
			39	20.86	20.90	20.84
		75	0	20.65	20.62	20.98

Conducted Power of LTE Band II

Bandwidth	Modulation	RB size	RB offset	Channel 18700	Channel 18900	Channel 19100
20MHz	QPSK	1	0	23.70	23.75	23.76
			50	24.12	24.22	24.13
			99	23.75	23.76	**23.75**
		50	0	21.26	20.52	20.74
			25	21.41	20.73	21.46
			50	20.73	20.99	21.44
		100	0	21.20	21.06	20.63
	16QAM	1	0	23.70	23.75	23.76
			50	24.12	24.22	24.13
			99	23.75	23.76	23.75
		50	0	21.14	20.57	20.96
			25	21.33	21.26	20.59
			50	20.58	20.52	20.56
		100	0	21.47	20.66	21.26

9.1.7 Conducted Power of LTE Band IV

Please Contact with WSCT
www.wsct-cert.com

Conducted Power of LTE Band IV						
Bandwidth	Modulation	RB size	RB offset	Channel 19957	Channel 20175	Channel 20393
1.4MHz	QPSK	1	0	23.63	23.64	23.48
			3	23.72	23.77	23.53
			5	23.57	23.63	23.28
		3	0	21.03	20.52	20.56
			2	20.50	21.29	20.46
			3	21.14	20.93	20.82
		6	0	20.72	21.06	20.93
	16QAM	1	0	23.63	23.64	23.48
			3	20.96	21.10	20.67
			5	23.72	23.77	23.53
		3	0	20.58	20.88	21.03
			2	20.74	20.54	20.94
			3	21.26	21.39	20.95
		6	0	20.46	21.25	21.07
Bandwidth	Modulation	RB size	RB offset	Channel 19965	Channel 20175	Channel 20385
3MHz	QPSK	1	0	23.47	23.13	23.23
			7	23.54	23.47	23.50
			14	23.36	23.14	23.26
		8	0	20.90	21.06	21.35
			4	21.29	21.02	21.28
			7	20.63	21.07	21.08
		15	0	20.75	20.81	20.80
	16QAM	1	0	23.47	23.13	23.23
			7	23.54	23.47	23.50
			14	23.36	23.14	23.26
		8	0	20.96	20.96	21.23
			4	21.15	21.06	21.45
			7	21.43	21.00	21.02
		15	0	20.79	21.33	20.63

Conducted Power of LTE Band IV

Bandwidth	Modulation	RB size	RB offset	Channel 19975	Channel 20175	Channel 20375
5MHz	QPSK	1	0	23.06	23.08	23.07
			13	23.47	23.37	23.63
			24	23.01	23.06	23.05
		12	0	21.00	20.60	20.75
			6	21.41	21.03	20.66
			13	20.69	20.54	21.10
		25	0	21.24	20.87	20.56
	16QAM	1	0	23.06	23.08	23.07
			13	23.47	23.37	23.63
			24	23.01	23.06	23.05
		12	0	20.84	21.31	20.57
			6	20.97	20.56	21.02
			13	20.97	21.18	20.93
		25	0	21.27	21.23	21.16
Bandwidth	**Modulation**	**RB size**	**RB offset**	**Channel 20000**	**Channel 20175**	**Channel 20350**
10MHz	QPSK	1	0	23.08	23.16	23.21
			25	23.26	23.28	23.37
			49	23.15	23.16	23.22
		25	0	21.34	21.03	20.80
			13	21.33	21.30	21.09
			25	21.09	20.47	21.42
		50	0	20.71	20.71	21.24
	16QAM	1	0	23.08	23.16	23.21
			25	20.76	20.97	20.88
			49	23.26	23.28	23.37
		25	0	20.90	20.64	21.05
			13	20.79	20.72	20.66
			25	21.17	20.72	20.82
		50	0	20.53	21.37	20.55

Conducted Power of LTE Band IV

Bandwidth	Modulation	RB size	RB offset	Channel 20025	Channel 20175	Channel 20325
15MHz	QPSK	1	0	23.06	23.08	23.19
			38	23.32	23.38	23.52
			74	23.06	23.05	23.16
		36	0	20.98	20.85	21.31
			18	20.86	21.15	20.94
			39	20.50	21.40	20.95
		75	0	21.29	20.76	20.89
	16QAM	1	0	23.06	23.08	23.19
			38	20.67	21.04	20.77
			74	23.32	23.38	23.52
		36	0	20.95	21.14	20.69
			18	20.70	21.11	21.28
			39	20.84	20.83	20.53
		75	0	20.86	21.12	20.89

Conducted Power of LTE Band IV

Bandwidth	Modulation	RB size	RB offset	Channel 20050	Channel 20175	Channel 20300
20MHz	QPSK	1	0	22.82	22.98	22.95
			50	23.25	23.34	23.32
			99	22.87	**22.99**	23.00
		50	0	20.61	20.63	20.69
			25	21.31	21.13	21.34
			50	20.89	20.77	21.31
		100	0	21.04	20.63	20.84
	16QAM	1	0	22.82	22.98	22.95
			50	23.25	23.34	23.32
			99	22.87	22.99	23.00
		50	0	20.53	20.67	21.17
			25	21.22	20.78	20.70
			50	21.03	20.67	20.75
		100	0	21.35	20.81	21.28

9.1.8 Conducted Power of LTE Band V

Conducted Power of LTE Band V						
Bandwidth	Modulation	RB size	RB offset	Channel 20470	Channel 20525	Channel 20643
1.4MHz	QPSK	1	0	23.94	23.52	23.64
			3	24.07	23.69	23.85
			5	23.90	23.51	23.72
		3	0	20.97	20.91	20.33
			2	20.61	21.16	20.53
			3	20.25	20.58	20.43
		6	0	20.49	20.48	20.27
	16QAM	1	0	23.94	23.52	23.64
			3	24.07	23.69	23.85
			5	23.90	23.51	23.72
		3	0	20.95	20.88	20.99
			2	20.95	20.31	20.50
			3	21.10	20.30	20.76
		6	0	20.86	20.89	20.26
Bandwidth	Modulation	RB size	RB offset	Channel 20415	Channel 20525	Channel 20635
3MHz	QPSK	1	0	23.87	23.61	23.76
			7	24.10	23.90	24.07
			14	23.85	23.60	23.80
		8	0	20.70	20.33	20.79
			4	21.16	20.39	20.67
			7	21.04	20.83	21.02
		15	0	20.26	20.88	20.46
	16QAM	1	0	23.87	23.61	23.76
			7	24.10	23.90	24.07
			14	23.85	23.60	23.80
		8	0	20.61	21.08	20.98
			4	20.91	20.90	20.34
			7	20.27	21.02	20.45
		15	0	20.93	20.89	20.76

Conducted Power of LTE Band V

Bandwidth	Modulation	RB size	RB offset	Channel 20425	Channel 20525	Channel 20625
5MHz	QPSK	1	0	23.79	23.59	23.55
			13	24.27	24.12	23.90
			24	23.75	23.58	23.58
		12	0	20.83	20.63	20.36
			6	20.22	21.13	20.34
			13	20.22	20.98	20.69
		25	0	20.77	20.46	20.57
	16QAM	1	0	23.79	23.59	23.55
			13	20.97	20.21	21.14
			24	24.27	24.12	23.90
		12	0	20.47	20.38	20.62
			6	20.86	20.94	21.09
			13	20.62	20.69	20.82
		25	0	20.81	21.04	20.37

Conducted Power of LTE Band V

Bandwidth	Modulation	RB size	RB offset	Channel 20450	Channel 20525	Channel 20600
10MHz	QPSK	1	0	23.84	23.69	23.70
			25	23.86	23.75	23.74
			49	23.74	23.69	**23.75**
		25	0	20.48	20.98	21.04
			13	20.31	20.61	20.21
			25	20.72	21.16	20.57
		50	0	20.67	21.17	20.75
	16QAM	1	0	23.84	23.69	23.70
			25	23.86	23.75	23.74
			49	23.74	23.69	23.75
		25	0	21.00	20.92	20.78
			13	21.10	20.95	20.86
			25	20.83	20.40	21.08
		50	0	20.96	20.55	20.44

9.1.9 Conducted Power of LTE Band VII

Conducted Power of LTE Band VII						
Bandwidth	Modulation	RB size	RB offset	Channel 20775	Channel 21100	Channel 21425
5MHz	QPSK	1	0	21.81	21.95	22.14
			13	22.22	22.44	22.56
			24	21.80	21.94	22.16
		12	0	21.26	20.66	21.13
			6	21.11	21.43	21.02
			13	20.92	21.31	21.11
		25	0	20.98	21.44	20.88
	16QAM	1	0	21.81	21.95	22.14
			13	22.22	22.44	22.56
			24	21.80	21.94	22.16
		12	0	21.06	21.26	20.87
			6	20.89	20.76	21.03
			13	20.95	21.03	20.98
		25	0	20.78	21.28	20.48
Bandwidth	Modulation	RB size	RB offset	Channel 20800	Channel 21100	21.43 21400
10MHz	QPSK	1	0	21.90	22.03	22.33
			25	22.01	22.17	22.37
			49	22.02	22.11	22.24
		25	0	21.27	20.87	20.90
			13	20.94	20.52	20.87
			25	21.08	21.30	20.97
		50	0	21.30	20.59	20.69
	16QAM	1	0	21.90	22.03	22.33
			25	22.01	22.17	22.37
			49	22.02	22.11	22.24
		25	0	20.60	20.51	20.53
			13	20.58	21.33	20.56
			25	21.41	20.54	21.33
		50	0	20.68	21.29	20.90

Conducted Power of LTE Band VII

Bandwidth	Modulation	RB size	RB offset	Channel 20825	Channel 21100	Channel 21375
15MHz	QPSK	1	0	21.84	22.01	22.25
			38	22.24	22.15	22.51
			74	21.90	22.03	22.17
		36	0	21.27	20.75	20.53
			18	20.96	20.83	21.06
			39	20.88	21.20	20.85
		75	0	21.32	21.43	20.93
	16QAM	1	0	20.54	20.79	20.95
			38	21.03	21.32	21.23
			74	21.37	20.66	20.90
		36	0	21.30	20.74	21.39
			18	20.59	20.79	21.19
			39	20.93	21.12	21.35
		75	0	21.44	20.87	21.30

Conducted Power of LTE Band VII

Bandwidth	Modulation	RB size	RB offset	Channel 21350	Channel 21100	Channel 21350
20MHz	QPSK	1	0	21.68	21.90	22.04
			50	22.12	22.27	22.42
			99	21.77	21.99	**22.30**
		50	0	20.48	20.46	20.81
			25	20.59	21.15	20.86
			50	20.99	20.70	21.10
		100	0	20.94	20.75	20.92
	16QAM	1	0	21.68	21.90	22.04
			50	22.12	22.27	22.42
			99	21.77	21.99	22.30
		50	0	20.79	21.33	20.52
			25	20.47	20.98	20.82
			50	21.22	20.43	20.94
		100	0	21.06	21.42	20.80

9.1.10 Conducted Power of LTE Band XXXVIII

Conducted Power of LTE Band XXXVIII						
Bandwidth	Modulation	RB size	RB offset	Channel 37775	Channel 38000	Channel 38225
5MHz	QPSK	1	0	22.66	22.68	22.65
			13	22.96	22.91	22.89
			24	22.69	22.67	22.64
		12	0	21.95	21.95	22.21
			6	21.97	21.97	21.65
			13	21.32	21.37	21.63
		25	0	21.66	22.11	22.28
	16QAM	1	0	22.66	22.68	22.65
			13	22.96	22.91	22.89
			24	22.69	22.67	22.64
		12	0	22.04	22.06	22.21
			6	21.67	21.54	21.67
			13	21.78	21.93	21.35
		25	0	21.73	21.85	21.82
Bandwidth	Modulation	RB size	RB offset	Channel 37800	Channel 38000	Channel 38200
10MHz	QPSK	1	0	22.75	22.81	22.77
			25	22.92	22.88	22.95
			49	22.83	22.80	22.82
		25	0	21.98	21.48	22.07
			13	21.62	21.81	22.17
			25	21.40	22.19	21.86
		50	0	21.74	21.96	21.81
	16QAM	1	0	22.75	22.81	22.77
			25	22.92	22.88	22.95
			49	22.83	22.80	22.82
		25	0	21.60	21.57	21.68
			13	22.07	21.80	21.50
			25	21.94	21.65	22.22
		50	0	22.10	21.39	21.98

Conducted Power of LTE Band XXXVIII

Bandwidth	Modulation	RB size	RB offset	Channel 37825	Channel 38000	Channel 38175
15MHz	QPSK	1	0	22.66	22.73	22.78
			38	23.04	22.96	23.06
			74	22.74	22.65	22.76
		36	0	22.18	21.89	21.43
			18	22.16	21.64	21.62
			39	21.87	21.77	21.69
		75	0	21.98	22.24	21.89
	16QAM	1	0	22.66	22.73	22.78
			38	23.04	22.96	23.06
			74	22.74	22.65	22.76
		36	0	21.65	21.88	22.11
			18	21.77	22.21	21.42
			39	21.77	21.59	21.56
		75	0	22.14	21.97	21.81
Bandwidth	Modulation	RB size	RB offset	Channel 37850	Channel 38000	Channel 38150
20MHz	QPSK	1	0	22.48	22.59	22.49
			50	23.06	22.95	22.95
			99	**22.58**	22.59	22.57
		50	0	21.01	21.30	21.63
			25	21.33	21.89	21.18
			50	21.01	21.24	21.57
		100	0	21.28	21.90	21.55
	16QAM	1	0	22.48	22.59	22.49
			50	23.06	22.95	22.95
			99	22.58	22.59	22.57
		50	0	22.18	21.37	21.88
			25	21.33	21.96	21.59
			50	21.76	21.84	21.65
		100	0	22.19	22.20	21.57

9.1.11 Conducted Power of LTE Band XLI

Please Contact with WSCT
www.wsct-cert.com

Conducted Power of LTE Band XLI						
Bandwidth	Modulation	RB size	RB offset	Channel 40265	Channel 40740	Channel 41215
5MHz	QPSK	1	0	22.10	22.08	22.06
			13	22.34	22.36	22.31
			24	22.13	22.12	22.04
		12	0	20.58	21.74	22.10
			6	20.73	21.60	21.78
			13	20.99	21.36	22.63
		25	0	21.00	21.64	22.35
	16QAM	1	0	20.86	21.71	22.04
			13	21.10	21.47	21.96
			24	21.18	22.13	22.00
		12	0	20.53	22.17	22.17
			6	21.20	21.98	21.94
			13	20.73	21.69	22.10
		25	0	21.09	21.36	22.02
Bandwidth	Modulation	RB size	RB offset	Channel 40290	Channel 40740	Channel 41190
10MHz	QPSK	1	0	22.21	22.20	22.13
			25	22.46	22.35	22.29
			49	22.23	22.25	22.14
		25	0	21.22	21.49	22.48
			13	20.78	21.26	22.12
			25	20.50	21.22	21.87
		50	0	20.83	21.70	22.64
	16QAM	1	0	22.21	22.20	22.13
			25	22.46	22.35	22.29
			49	22.23	22.25	22.14
		25	0	21.36	21.58	22.60
			13	20.81	21.63	22.26
			25	21.18	21.27	22.47
		50	0	20.43	22.14	22.66

Conducted Power of LTE Band XLI

Bandwidth	Modulation	RB size	RB offset	Channel 40315	Channel 40740	Channel 41165
15MHz	QPSK	1	0	22.12	22.10	22.12
			38	22.44	22.43	22.43
			74	22.15	22.18	22.07
		36	0	21.40	21.81	22.05
			18	21.57	22.07	21.85
			39	20.80	21.92	21.73
		75	0	22.33	21.94	22.08
	16QAM	1	0	22.12	22.10	22.12
			38	22.44	22.43	22.43
			74	22.15	22.18	22.07
		36	0	20.82	21.68	22.59
			18	20.70	21.58	21.96
			39	20.80	21.25	21.80
		75	0	22.22	21.71	21.91
Bandwidth	Modulation	RB size	RB offset	Channel 40340	Channel 40740	Channel 41140
20MHz	QPSK	1	0	21.94	21.94	21.94
			50	22.40	22.40	22.35
			99	22.04	**22.04**	21.90
		50	0	20.71	22.03	22.41
			25	20.57	22.46	21.82
			50	20.61	21.65	22.34
		100	0	20.76	22.39	22.29
	16QAM	1	0	21.94	21.94	21.94
			50	22.40	22.40	22.35
			99	22.04	22.04	21.90
		50	0	21.30	21.64	22.63
			25	21.02	21.54	22.64
			50	21.31	21.45	22.56
		100	0	20.51	21.35	22.59

9.1.12 Conducted Power of Wi-Fi 2.4G

Mode	802.11b		
Channel / Frequency (MHz)	1(2412)	6(2437)	11(2462)
Average Power(dBm)	14.59	**14.87**	14.63
Mode	802.11g		
Channel / Frequency (MHz)	1(2412)	6(2437)	11(2462)
Average Power(dBM)	13.73	13.64	13.59
Mode	802.11n(HT20)		
Channel / Frequency (MHz)	1(2412)	6(2437)	11(2462)
Average Power(dBM)	13.42	13.14	13.49
Mode	802.11n(HT40)		
Channel / Frequency (MHz)	1(2412)	6(2437)	11(2462)
Average Power(dBm)	12.35	12.24	12.21

9.1.13 Conducted Power of BT

The maximum output power of BT is:

Mode	**1Mbps**		
Channel / Frequency (MHz)	0(2402)	39(2441)	78(2480)
Average Power(dBm)	6.47	1.45	4.93
Mode	**2Mbps**		
Channel / Frequency (MHz)	0(2402)	39(2441)	78(2480)
Average Power(dBm)	5.57	0.27	3.74
Mode	**3Mbps**		
Channel / Frequency (MHz)	0(2402)	39(2441)	78(2480)
Average Power(dBm)	5.61	0.27	3.73

9.1.14 Tune-up power tolerance

Band	Tune-up power tolerance(dBm)		
GSM850	GSM/GPRS (GMSK)	GSM	Max output power =32.5dBm±0.5dBm
		1TXslots	Max output power =32.5dBm±0.5dBm
		2TXslots	Max output power =31.5dBm±0.5dBm
		3TXslots	Max output power =30.0dBm±0.5dBm
		4TXslots	Max output power =29.0dBm±0.5dBm
GSM850	EGPRS (8-PSK)	1TXslots	Max output power =32.5dBm±0.5dBm
		2TXslots	Max output power =31.5dBm±0.5dBm
		3TXslots	Max output power =30.0dBm±0.5dBm
		4TXslots	Max output power =29.0dBm±0.5dBm
GSM1900	GSM/GPRS (GMSK)	GSM	Max output power =30.0dBm±0.5dBm
		1TXslots	Max output power =29.5dBm±0.5dBm
		2TXslots	Max output power =28.5dBm±0.5dBm
		3TXslots	Max output power =27.0dBm±0.5dBm
		4TXslots	Max output power =26.5dBm±0.5dBm
GSM1900	EGPRS (8-PSK)	1TXslots	Max output power =29.5dBm±0.5dBm
		2TXslots	Max output power =28.5dBm±0.5dBm
		3TXslots	Max output power =27.0dBm±0.5dBm
		4TXslots	Max output power =26.5dBm±0.5dBm
WCDMA 2	Max output power =22.5dbm±0.5dbm		
WCDMA 4	Max output power =22.0dbm±0.5dbm		
WCDMA 5	Max output power =21.5dbm±0.5dbm		
LTE B2	Max output power =23.5dbm±0.5dbm		
LTE B4	Max output power =23.0dbm±0.5dbm		
LTE B5	Max output power =23.5dbm±0.5dbm		
LTE B7	Max output power =22.5dbm±0.5dbm		
LTE B38	Max output power =22.5dbm±0.5dbm		
LTE B41	Max output power =22.0dbm±0.5dbm		
2.4G Wi-Fi	802.11b	Max output power =14.5±0.5dbm	
	802.11g	Max output power =13.5±0.5dbm	
	802.11n (HT20)	Max output power =13.0 ±0.5dbm	
	802.11n (HT40)	Max output power =12.0±0.5dbm	
BT	1Mbps Power	Max output power =6.5dBm±0.5dbm	
	2Mbps Power	Max output power =6.0dBm±0.5dbm	
	3Mbps Power	Max output power =5.5dBm±0.5dbm	

9.2 SAR test results

Notes:

1) Per KDB447498 D01v05 r02,the SAR test shall be performed at the high, middle and low frequency channels of each operating mode. If the scaled SAR measured at mid-band channel for each test configuration is at least 3.0 dB lower than the SAR limit (< 0.8 W/kg), testing at the high and low channels is optional.

2) Per KDB447498 D01v05r02, testing of other required channels within the operating mode of a frequency band is not required when the reported 1-g or 10-g SAR for the mid-band or highest output power channel is: ≤ 0.8 W/kg or 2.0 W/kg, for 1-g or 10-g respectively, when the transmission band is ≤ 100 MHz. When the maximum output power variation across the required test channels is > ½ dB, instead of the middle channel, the highest output power channel must be used.

3) Per KDB447498 D01v05r02, All measurement SAR result is scaled-up to account for tune-up tolerance is compliant.

4) Per KDB648474 D04v01r02, body-worn accessory testing is typically associated with voice operations. Therefore, GSM voice was evaluated for body-worn with headset SAR.

5)Per KDB248227 D01v01r02, the procedures required to establish specific device operating configurations for testing the SAR of 802.11 a/b/g transmitters.

(1) For Headsets operating next to ear, hotspot mode or mini-tablet configurations, the initial test position procedures were applied. The test position with the highest extrapolated peak SAR will be used as the initial test position. When the reported SAR of initial test position is <= 0.4 W/kg, SAR testing for remaining test positions is not required. Otherwise, SAR is evaluated at the subsequent highest peak SAR positions until the reported SAR result is <= 0.8 W/kg or all test positions are measured.

(2) For WLAN 2.4 GHz, the highest measured maximum output power channel for DSSS was selected for SAR measurement. When the reported SAR is <= 0.8 W/kg, no further SAR testing is required. Otherwise, SAR is evaluated at the next highest measured output power channel. When any reported SAR is > 1.2 W/kg, SAR is required for the third channel. For OFDM modes (802.11g/n), SAR is not required when the highest reported SAR for DSSS is adjusted by the ratio of OFDM to DSSS specified maximum output power and it is <= 1.2 W/kg.

(3) For WLAN 5 GHz, the initial test configuration was selected according to the transmission mode with the highest maximum output power. When the reported SAR of initial test configuration is > 0.8 W/kg, SAR is required for the subsequent highest measured output power channel until the reported SAR result is <= 1.2 W/kg or all required channels are measured. For other transmission modes, SAR is not required when the highest reported SAR for initial test configuration is adjusted by the ratio of subsequent test configuration to initial test configuration specified maximum output power and it is <= 1.2 W/kg.

6) Per KDB865664 D01v01r04,for each frequency band,repeated SAR measurement is required only when the measured SAR is ≥0.8W/Kg; if the deviation among the repeated measurement is ≤20%,and the measured SAR <1.45W/Kg,only one repeated measurement is required.

7) Per KDB865664 D02v01r01, SAR plot is only required for the highest measured SAR in each exposure configuration, wireless mode and frequency band combination; Plots are also required when the measured SAR is > 1.5 W/kg, or > 7.0 W/kg for occupational exposure. The published RF exposure KDB procedures may require additional plots; for example, to support SAR to peak location separation ratio test exclusion and/or volume scan post-processing(Refer to appendix B for details).

8) Per KDB941225 D06v01r01, the DUT Dimension is bigger than 9 cm x 5 cm, so 10mm is chosen as the test separation distance for Hotspot mode. When the antenna-to-edge distance is greater than 2.5cm,such position does not need to be tested.

9) Per KDB 941225 D01, 3G SAR Measurement Procedures ,The mode tested for SAR is referred to as the primary mode. The equivalent modes considered for SAR test reduction are denoted as secondary modes. Both primary and secondary modes must be in the same frequency band. When the maximum output power and tune-up tolerance specified for production units in a secondary mode is⩽ 1/4 dB higher than the primary mode or when the highest reported SAR of the primary mode is scaled by the ratio of specified maximum output power and tune-up tolerance of secondary to primary mode and the adjusted SAR is ⩽1.2 W/kg, SAR measurement is not required for the secondary mode.

10)Per KDB 941225 D05, SAR Evaluation Considerations for LTE Devices

(1)QPSK with 1 RB and 50% RB allocation

Start with the largest channel bandwidth and measure SAR, using the RB offset and required test channel combination with the highest maximum output power among RB offsets at the upper edge, middle and lower edge of each required test channel. When the reported SAR is ⩽ 0.8 W/kg, testing of the remaining RB offset configurations and required test channels is not required; otherwise, SAR is required for the remaining required test channels and only for the RB offset configuration with the highest output power for that channel. When the reported SAR of a required test channel is > 1.45 W/kg, SAR is required for all three RB offset configurations for that required test channel.

(2)QPSK with 100% RB allocation

SAR is not required when the highest maximum output power for 100% RB allocation is less than the highest maximum output power in 50% and 1 RB allocations and the highest reported SAR for 1 RB and 50% RB allocation are ≤ 0.8 W/kg. Otherwise, SAR is measured for the highest output power channel; and if the reported SAR is > 1.45 W/kg, the remaining required test channels must also be tested.

(3)Higher order modulations

SAR is required only when the highest maximum output power for the configuration in the higher order modulation is > 1/2 dB higher than the same configuration in QPSK or when the reported SAR for the QPSK configuration is >1.45 W/kg.

(4)Other channel bandwidth

SAR is required when the highest maximum output power of the smaller channel bandwidth is > 1/2 dB higher than the equivalent channel configurations in the largest channel bandwidth configuration or the reported SAR of a configuration for the largest channel bandwidth is > 1.45 W/kg.

9.2.1 Results overview of GSM850

Test Position of Head	Test channel /Freq.(MHz)	Test Mode	SAR Value (W/kg)		Power Drift (%)	Conducted Power (dBm)	Tune-up Limit (dBm)	Scaled SAR_{1-g} (W/kg)	Scaling Factor
			1-g	10-g					
Left Head Touched	128/824.2	GPRS 4TS	0.409	0.269	1.210	28.510	29.000	**0.458**	1.119
Left Head Tilted 15°	128/824.2	GPRS 4TS	0.380	0.235	-0.550	28.510	29.000	0.425	1.119
Right Head Touched	128/824.2	GPRS 4TS	0.381	0.249	3.470	28.510	29.000	0.427	1.119
Right Head Tilted 15°	128/824.2	GPRS 4TS	0.388	0.245	3.050	28.510	29.000	0.434	1.119
Test Position of Body with 10mm	**Test channel /Freq.(MHz)**	**Test Mode**	**SAR Value (W/kg)**		**Power Drift (%)**	**Conducted Power (dBm)**	**Tune-up Limit (dBm)**	**Scaled SAR_{1-g} (W/kg)**	**Scaling Factor**
			1-g	**10-g**					
SAR Results for Hotspot Exposure Condition									
Front side	128/824.2	GPRS 4TS	0.082	0.057	2.390	28.510	29.000	0.092	1.119
Rear side	128/824.2	GPRS 4TS	0.115	0.086	0.360	28.510	29.000	**0.129**	1.119
Top side	128/824.2	GPRS 4TS	0.078	0.051	2.470	28.510	29.000	0.087	1.119
Left side	128/824.2	GPRS 4TS	0.088	0.050	2.730	28.510	29.000	0.099	1.119
Right side	128/824.2	GPRS 4TS	0.09	0.064	0.390	28.510	29.000	0.101	1.119

9.2.2 Results overview of GSM1900

Test Position of Head	Test channel /Freq.(MHz)	Test Mode	SAR Value (W/kg)		Power Drift (%)	Conducted Power (dBm)	Tune-up Limit (dBm)	Scaled SAR_{1-g} (W/kg)	Scalig Factor
			1-g	10-g					
Left Head Touched	661/1880	GPRS 4TS	0.722	0.331	2.730	26.360	26.500	**0.746**	1.033
Left Head Tilted 15°	661/1880	GPRS 4TS	0.683	0.302	-1.600	26.360	26.500	0.705	1.033
Right Head Touched	661/1880	GPRS 4TS	0.696	0.308	1.330	26.360	26.500	0.719	1.033
Right Head Tilted 15°	661/1880	GPRS 4TS	0.687	0.302	2.690	26.360	26.500	0.710	1.033
Test Position of Body with 10mm	**Test channel /Freq.(MHz)**	**Test Mode**	**SAR Value (W/kg)**		**Power Drift (%)**	**Conducted Power (dBm)**	**Tune-up Limit (dBm)**	**Scaled SAR_{1-g} (W/kg)**	**Scalig Factor**
			1-g	**10-g**					
SAR Results for Hotspot Exposure Condition									
Front side	661/1880	GPRS 4TS	0.194	0.105	0.390	26.360	26.500	**0.200**	1.033
Rear side	661/1880	GPRS 4TS	0.165	0.079	-0.970	26.360	26.500	0.170	1.033
Top side	661/1880	GPRS 4TS	0.161	0.084	-3.720	26.360	26.500	0.166	1.033
Left side	661/1880	GPRS 4TS	0.169	0.084	4.200	26.360	26.500	0.175	1.033
Right side	661/1880	GPRS 4TS	0.171	0.082	-3.570	26.360	26.500	0.177	1.033

9.2.3 Results overview of UMTS Band II

Test Position of Head	Test channel /Freq.(MHz)	Test Mode	SAR Value (W/kg)		Power Drift (%)	Conducted Power (dBm)	Tune-up Limit (dBm)	Scaled SAR_{1-g} (W/kg)	Scalig Factor
			1-g	10-g					
Left Head Touched	9538/1907.6	RMC	0.640	0.419	0.500	22.410	22.500	**0.653**	1.021
Left Head Tilted 15°	9538/1907.6	RMC	0.607	0.398	1.620	22.410	22.500	0.620	1.021
Right Head Touched	9538/1907.6	RMC	0.604	0.392	-4.770	22.410	22.500	0.617	1.021
Right Head Tilted 15°	9538/1907.6	RMC	0.613	0.394	-1.160	22.410	22.500	0.626	1.021
Test Position of Body with 10mm	**Test channel /Freq.(MHz)**	**Test Mode**	**SAR Value (W/kg)**		**Power Drift (%)**	**Conducted Power (dBm)**	**Tune-up Limit (dBm)**	**Scaled SAR_{1-g} (W/kg)**	**Scalig Factor**
			1-g	**10-g**					
SAR Results for Hotspot Exposure Condition									
Front side	9538/1907.6	RMC	0.211	0.097	-3.960	22.410	22.500	0.215	1.021
Rear side	9538/1907.6	RMC	0.237	0.123	1.580	22.410	22.500	**0.242**	1.021
Top side	9538/1907.6	RMC	0.212	0.092	1.900	22.410	22.500	0.216	1.021
Left side	9538/1907.6	RMC	0.209	0.100	4.800	22.410	22.500	0.213	1.021
Right side	9538/1907.6	RMC	0.209	0.084	2.240	22.410	22.500	0.213	1.021

9.2.4 Results overview of UMTS Band IV

Test Position of Head	Test channel /Freq.(MHz)	Test Mode	SAR Value (W/kg)		Power Drift (%)	Conducted Power (dBm)	Tune-up Limit (dBm)	Scaled SAR_{1-g} (W/kg)	Scalig Factor
			1-g	10-g					
Left Head Touched	1513/1752.6	RMC	0.642	0.308	1.960	21.710	22.000	0.686	1.069
Left Head Tilted 15°	1513/1752.6	RMC	0.658	0.307	-1.750	21.710	22.000	0.703	1.069
Right Head Touched	1513/1752.6	RMC	0.680	0.330	0.440	21.710	22.000	**0.727**	1.069
Right Head Tilted 15°	1513/1752.6	RMC	0.641	0.290	-0.450	21.710	22.000	0.685	1.069
Test Position of Body with 10mm	**Test channel /Freq.(MHz)**	**Test Mode**	**SAR Value (W/kg)**		**Power Drift (%)**	**Conducted Power (dBm)**	**Tune-up Limit (dBm)**	**Scaled SAR_{1-g} (W/kg)**	**Scalig Factor**
			1-g	**10-g**					
SAR Results for Hotspot Exposure Condition									
Front side	1513/1752.6	RMC	0.236	0.104	2.670	21.710	22.000	0.252	1.069
Rear side	1513/1752.6	RMC	0.260	0.143	0.660	21.710	22.000	**0.278**	1.069
Top side	1513/1752.6	RMC	0.236	0.106	4.970	21.710	22.000	0.252	1.069
Left side	1513/1752.6	RMC	0.231	0.113	1.430	21.710	22.000	0.247	1.069
Right side	1513/1752.6	RMC	0.227	0.121	-3.680	21.710	22.000	0.243	1.069

9.2.5 Results overview of UMTS Band V

Test Position of Head	Test channel /Freq.(MHz)	Test Mode	SAR Value (W/kg)		Power Drift (%)	Conducted Power (dBm)	Tune-up Limit (dBm)	Scaled SAR_{1-g} (W/kg)	Scalig Factor
			1-g	10-g					
Left Head Touched	4233/846.6	RMC	0.418	0.243	0.520	21.350	21.500	0.433	1.035
Left Head Tilted 15°	4233/846.6	RMC	0.425	0.242	4.810	21.350	21.500	0.440	1.035
Right Head Touched	4233/846.6	RMC	0.457	0.276	1.030	21.350	21.500	**0.473**	1.035
Right Head Tilted 15°	4233/846.6	RMC	0.428	0.241	0.970	21.350	21.500	0.443	1.035
Test Position of Body with 10mm	**Test channel /Freq.(MHz)**	**Test Mode**	**SAR Value (W/kg)**		**Power Drift (%)**	**Conducted Power (dBm)**	**Tune-up Limit (dBm)**	**Scaled SAR_{1-g} (W/kg)**	**Scalig Factor**
			1-g	**10-g**					
SAR Results for Hotspot Exposure Condition									
Front side	4233/846.6	RMC	0.104	0.064	1.930	21.350	21.500	0.108	1.035
Rear side	4233/846.6	RMC	0.144	0.104	-0.090	21.350	21.500	**0.149**	1.035
Top side	4233/846.6	RMC	0.106	0.075	4.850	21.350	21.500	0.110	1.035
Left side	4233/846.6	RMC	0.123	0.074	0.100	21.350	21.500	0.127	1.035
Right side	4233/846.6	RMC	0.113	0.069	1.710	21.350	21.500	0.117	1.035

9.2.6 Results overview of LTE Band II

Test Position of Head	Test channel /Freq.(MHz)	Test Mode	SAR Value (W/kg)		Power Drift (%)	Conducted Power (dBm)	Tune-up Limit (dBm)	Scaled SAR_{1-g} (W/kg)	Scalig Factor
			1-g	10-g					
Left Head Touched	19100/1900	20M QPSK 1RB#99	0.366	0.231	-1.060	23.750	24.000	0.388	1.059
Left Head Tilted 15°	19100/1900	20M QPSK 1RB#99	0.193	0.196	4.170	23.750	24.000	0.204	1.059
Right Head Touched	19100/1900	20M QPSK 1RB#99	0.429	0.243	-0.360	23.750	24.000	**0.454**	1.059
Right Head Tilted 15°	19100/1900	20M QPSK 1RB#99	0.342	0.209	-4.670	23.750	24.000	0.362	1.059
Left Head Touched	19100/1900	20M QPSK 50%RB#25	0.329	0.198	-2.640	23.750	24.000	0.348	1.059
Left Head Tilted 15°	19100/1900	20M QPSK 50%RB#25	0.331	0.195	0.150	23.750	24.000	0.351	1.059
Right Head Touched	19100/1900	20M QPSK 50%RB#25	0.332	0.208	4.000	23.750	24.000	0.352	1.059
Right Head Tilted 15°	19100/1900	20M QPSK 50%RB#25	0.346	0.200	1.530	23.750	24.000	0.367	1.059
Test Position of Body with 10mm	**Test channel /Freq.(MHz)**	**Test Mode**	**SAR Value (W/kg)**		**Power Drift (%)**	**Conducted Power (dBm)**	**Tune-up Limit (dBm)**	**Scaled SAR_{1-g} (W/kg)**	**Scalig Factor**
			1-g	10-g					
SAR Results for Hotspot Exposure Condition									
Front side	19100/1900	20M QPSK 1RB#99	0.241	0.123	0.680	23.750	24.000	**0.255**	1.059
Rear side	19100/1900	20M QPSK 1RB#99	0.129	0.072	0.650	23.750	24.000	0.137	1.059
Top side	19100/1900	20M QPSK 1RB#99	0.215	0.092	2.930	23.750	24.000	0.228	1.059
Left side	19100/1900	20M QPSK 1RB#99	0.215	0.102	0.030	23.750	24.000	0.228	1.059
Right side	19100/1900	20M QPSK 1RB#99	0.219	0.085	2.310	23.750	24.000	0.232	1.059
Front side	19100/1900	20M QPSK 50%RB#25	0.212	0.084	-4.800	23.750	24.000	0.225	1.059
Rear side	19100/1900	20M QPSK 50%RB#25	0.211	0.096	1.140	23.750	24.000	0.224	1.059
Top side	19100/1900	20M QPSK 50%RB#25	0.205	0.100	-1.300	23.750	24.000	0.217	1.059
Left side	19100/1900	20M QPSK 50%RB#25	0.204	0.101	-4.990	23.750	24.000	0.216	1.059
Right side	19100/1900	20M QPSK 50%RB#25	0.204	0.084	0.850	23.750	24.000	0.216	1.059

9.2.7 Results overview of LTE Band IV

Test Position of Head	Test channel /Freq.(MHz)	Test Mode	SAR Value (W/kg)		Power Drift (%)	Conducted Power (dBm)	Tune-up Limit (dBm)	Scaled SAR_{1-g} (W/kg)	Scalig Factor
			1-g	10-g					
Left Head Touched	20300/1745	20M QPSK 1RB#99	0.659	0.543	-3.780	22.990	23.000	**0.661**	1.002
Left Head Tilted 15°	20300/1745	20M QPSK 1RB#99	0.639	0.509	3.210	22.990	23.000	0.640	1.002
Right Head Touched	20300/1745	20M QPSK 1RB#99	0.429	0.243	-0.360	22.990	23.000	0.430	1.002
Right Head Tilted 15°	20300/1745	20M QPSK 1RB#99	0.638	0.509	4.760	22.990	23.000	0.639	1.002
Left Head Touched	20300/1745	20M QPSK 50%RB#25	0.631	0.508	-1.030	22.990	23.000	0.632	1.002
Left Head Tilted 15°	20300/1745	20M QPSK 50%RB#25	0.635	0.521	-1.110	22.990	23.000	0.636	1.002
Right Head Touched	20300/1745	20M QPSK 50%RB#25	0.626	0.515	-3.140	22.990	23.000	0.627	1.002
Right Head Tilted 15°	20300/1745	20M QPSK 50%RB#25	0.625	0.505	1.420	22.990	23.000	0.626	1.002
Test Position of Body with 10mm	**Test channel /Freq.(MHz)**	**Test Mode**	**SAR Value (W/kg)**		**Power Drift (%)**	**Conducted Power (dBm)**	**Tune-up Limit (dBm)**	**Scaled SAR_{1-g} (W/kg)**	**Scalig Factor**
			1-g	10-g					
SAR Results for Hotspot Exposure Condition									
Front side	20300/1745	20M QPSK 1RB#99	0.226	0.101	3.530	22.990	23.000	0.227	1.002
Rear side	20300/1745	20M QPSK 1RB#99	0.257	0.136	0.640	22.990	23.000	**0.258**	1.002
Top side	20300/1745	20M QPSK 1RB#99	0.226	0.099	1.330	22.990	23.000	0.227	1.002
Left side	20300/1745	20M QPSK 1RB#99	0.236	0.097	-4.660	22.990	23.000	0.237	1.002
Right side	20300/1745	20M QPSK 1RB#99	0.227	0.102	-0.420	22.990	23.000	0.228	1.002
Front side	20300/1745	20M QPSK 50%RB#25	0.228	0.112	-0.340	22.990	23.000	0.229	1.002
Rear side	20300/1745	20M QPSK 50%RB#25	0.223	0.107	-1.830	22.990	23.000	0.224	1.002
Top side	20300/1745	20M QPSK 50%RB#25	0.189	0.115	3.120	22.990	23.000	0.189	1.002
Left side	20300/1745	20M QPSK 50%RB#25	0.232	0.111	-0.970	22.990	23.000	0.233	1.002
Right side	20300/1745	20M QPSK 50%RB#25	0.224	0.103	-2.120	22.990	23.000	0.225	1.002

9.2.8 Results overview of LTE Band V

Test Position of Head	Test channel /Freq.(MHz)	Test Mode	SAR Value (W/kg)		Power Drift (%)	Conducted Power (dBm)	Tune-up Limit (dBm)	Scaled SAR_{1-g} (W/kg)	Scalig Factor
			1-g	10-g					
Left Head Touched	20600/844	10M QPSK 1RB#49	0.251	0.145	1.160	23.750	24.000	0.266	1.059
Left Head Tilted 15°	20600/844	10M QPSK 1RB#49	0.264	0.144	-1.250	23.750	24.000	0.280	1.059
Right Head Touched	20600/844	10M QPSK 1RB#49	0.288	0.178	0.000	23.750	24.000	**0.305**	1.059
Right Head Tilted 15°	20600/844	10M QPSK 1RB#49	0.255	0.150	-4.620	23.750	24.000	0.270	1.059
Left Head Touched	20600/844	10M QPSK 25RB#25	0.266	0.155	4.280	23.750	24.000	0.282	1.059
Left Head Tilted 15°	20600/844	10M QPSK 25RB#25	0.255	0.156	0.150	23.750	24.000	0.270	1.059
Right Head Touched	20600/844	10M QPSK 25RB#25	0.260	0.152	1.950	23.750	24.000	0.275	1.059
Right Head Tilted 15°	20600/844	10M QPSK 25RB#25	0.267	0.146	2.660	23.750	24.000	0.283	1.059
SAR Results for Hotspot Exposure Condition									
Front side	20600/844	10M QPSK 1RB#49	0.117	0.086	4.940	23.750	24.000	0.124	1.059
Rear side	20600/844	10M QPSK 1RB#49	0.152	0.117	0.330	23.750	24.000	**0.161**	1.059
Top side	20600/844	10M QPSK 1RB#49	0.121	0.080	-2.450	23.750	24.000	0.128	1.059
Left side	20600/844	10M QPSK 1RB#49	0.127	0.079	-2.310	23.750	24.000	0.135	1.059
Right side	20600/844	10M QPSK 1RB#49	0.115	0.096	-3.770	23.750	24.000	0.122	1.059
Front side	20600/844	10M QPSK 25RB#25	0.115	0.094	-2.690	23.750	24.000	0.122	1.059
Rear side	20600/844	10M QPSK 25RB#25	0.119	0.080	-0.920	23.750	24.000	0.126	1.059
Top side	20600/844	10M QPSK 25RB#25	0.130	0.085	0.990	23.750	24.000	0.138	1.059
Left side	20600/844	10M QPSK 25RB#25	0.131	0.093	-0.330	23.750	24.000	0.139	1.059
Right side	20600/844	10M QPSK 25RB#25	0.121	0.094	-2.980	23.750	24.000	0.128	1.059

9.2.9 Results overview of LTE Band VII

Test Position of Head	Test channel /Freq.(MHz)	Test Mode	SAR Value (W/kg)		Power Drift (%)	Conducted Power (dBm)	Tune-up Limit (dBm)	Scaled SAR_{1-g} (W/kg)	Scalig Factor
			1-g	10-g					
Left Head Touched	21350/2560	20M QPSK 1RB#99	0.450	0.210	4.150	22.300	22.800	0.505	1.122
Left Head Tilted 15°	21350/2560	20M QPSK 1RB#99	0.456	0.201	2.570	22.300	22.800	0.512	1.122
Right Head Touched	21350/2560	20M QPSK 1RB#99	0.477	0.233	0.700	22.300	22.800	**0.535**	1.122
Right Head Tilted 15°	21350/2560	20M QPSK 1RB#99	0.457	0.205	-1.140	22.300	22.800	0.513	1.122
Left Head Touched	21350/2560	20M QPSK 50%RB#25	0.453	0.203	-2.470	22.300	22.800	0.508	1.122
Left Head Tilted 15°	21350/2560	20M QPSK 50%RB#25	0.440	0.203	0.270	22.300	22.800	0.494	1.122
Right Head Touched	21350/2560	20M QPSK 50%RB#25	0.448	0.199	-0.870	22.300	22.800	0.503	1.122
Right Head Tilted 15°	21350/2560	20M QPSK 50%RB#25	0.444	0.201	-2.080	22.300	22.800	0.498	1.122
Test Position of Body with 10mm	**Test channel /Freq.(MHz)**	**Test Mode**	**SAR Value (W/kg)**		**Power Drift (%)**	**Conducted Power (dBm)**	**Tune-up Limit (dBm)**	**Scaled SAR_{1-g} (W/kg)**	**Scalig Factor**
			1-g	10-g					
SAR Results for Hotspot Exposure Condition									
Front side	21350/2560	20M QPSK 1RB#99	0.198	0.129	-3.890	22.300	22.800	0.222	1.122
Rear side	21350/2560	20M QPSK 1RB#99	0.212	0.154	-1.400	22.300	22.800	0.238	1.122
Top side	21350/2560	20M QPSK 1RB#99	0.180	0.116	2.320	22.300	22.800	0.202	1.122
Left side	21350/2560	20M QPSK 1RB#99	0.281	0.130	-1.580	22.300	22.800	**0.315**	1.122
Right side	21350/2560	20M QPSK 1RB#99	0.179	0.115	-3.560	22.300	22.800	0.201	1.122
Front side	21350/2560	20M QPSK 50%RB#25	0.176	0.121	0.790	22.300	22.800	0.197	1.122
Rear side	21350/2560	20M QPSK 50%RB#25	0.176	0.117	2.860	22.300	22.800	0.197	1.122
Top side	21350/2560	20M QPSK 50%RB#25	0.175	0.129	-2.690	22.300	22.800	0.196	1.122
Left side	21350/2560	20M QPSK 50%RB#25	0.174	0.132	0.830	22.300	22.800	0.195	1.122
Right side	21350/2560	20M QPSK 50%RB#25	0.187	0.122	0.330	22.300	22.800	0.210	1.122

9.2.10 Results overview of LTE Band XXXVIII

Test Position of Head	Test channel /Freq.(MHz)	Test Mode	SAR Value (W/kg)		Power Drift (%)	Conducted Power (dBm)	Tune-up Limit (dBm)	Scaled SAR_{1-g} (W/kg)	Scalig Factor
			1-g	10-g					
Left Head Touched	37850/2580	20M QPSK 1RB#99	0.348	0.202	-1.490	22.580	22.800	0.366	1.052
Left Head Tilted 15°	37850/2580	20M QPSK 1RB#99	0.340	0.198	-3.300	22.580	22.800	0.358	1.052
Right Head Touched	37850/2580	20M QPSK 1RB#99	0.374	0.237	0.390	22.580	22.800	**0.393**	1.052
Right Head Tilted 15°	37850/2580	20M QPSK 1RB#99	0.344	0.216	1.220	22.580	22.800	0.362	1.052
Left Head Touched	37850/2580	20M QPSK 50%RB#25	0.351	0.212	-0.170	22.580	22.800	0.369	1.052
Left Head Tilted 15°	37850/2580	20M QPSK 50%RB#25	0.337	0.212	0.190	22.580	22.800	0.355	1.052
Right Head Touched	37850/2580	20M QPSK 50%RB#25	0.347	0.200	-0.480	22.580	22.800	0.365	1.052
Right Head Tilted 15°	37850/2580	20M QPSK 50%RB#25	0.352	0.207	-1.240	22.580	22.800	0.370	1.052
Test Position of Body with 10mm	**Test channel /Freq.(MHz)**	**Test Mode**	**SAR Value (W/kg)**		**Power Drift (%)**	**Conducted Power (dBm)**	**Tune-up Limit (dBm)**	**Scaled SAR_{1-g} (W/kg)**	**Scalig Factor**
			1-g	10-g					
SAR Results for Hotspot Exposure Condition									
Front side	37850/2580	20M QPSK 1RB#99	0.222	0.123	1.470	22.580	22.800	0.234	1.052
Rear side	37850/2580	20M QPSK 1RB#99	0.269	0.156	0.910	22.580	22.800	**0.283**	1.052
Top side	37850/2580	20M QPSK 1RB#99	0.239	0.126	-4.870	22.580	22.800	0.251	1.052
Left side	37850/2580	20M QPSK 1RB#99	0.246	0.125	-1.690	22.580	22.800	0.259	1.052
Right side	37850/2580	20M QPSK 1RB#99	0.237	0.135	1.160	22.580	22.800	0.249	1.052
Front side	37850/2580	20M QPSK 50%RB#25	0.244	0.116	-3.590	22.580	22.800	0.257	1.052
Rear side	37850/2580	20M QPSK 50%RB#25	0.243	0.124	0.840	22.580	22.800	0.256	1.052
Top side	37850/2580	20M QPSK 50%RB#25	0.246	0.132	-1.420	22.580	22.800	0.259	1.052
Left side	37850/2580	20M QPSK 50%RB#25	0.231	0.136	-2.840	22.580	22.800	0.243	1.052
Right side	37850/2580	20M QPSK 50%RB#25	0.242	0.119	0.335	22.580	22.800	0.255	1.052

9.2.11 Results overview of LTE Band XLI

Test Position of Head	Test channel /Freq.(MHz)	Test Mode	SAR Value (W/kg)		Power Drift (%)	Conducted Power (dBm)	Tune-up Limit (dBm)	Scaled SAR_{1-g} (W/kg)	Scalig Factor
			1-g	10-g					
Left Head Touched	40740/2605	20M QPSK 1RB#99	0.049	0.026	0.870	22.040	22.500	0.054	1.112
Left Head Tilted 15°	40740/2605	20M QPSK 1RB#99	0.055	0.009	4.760	22.040	22.500	0.061	1.112
Right Head Touched	40740/2605	20M QPSK 1RB#99	0.089	0.048	0.980	22.040	22.500	**0.099**	1.112
Right Head Tilted 15°	40740/2605	20M QPSK 1RB#99	0.050	0.024	-3.590	22.040	22.500	0.056	1.112
Left Head Touched	40740/2605	20M QPSK 50%RB#25	0.053	0.017	-1.940	22.040	22.500	0.059	1.112
Left Head Tilted 15°	40740/2605	20M QPSK 50%RB#25	0.063	0.010	-1.410	22.040	22.500	0.070	1.112
Right Head Touched	40740/2605	20M QPSK 50%RB#25	0.049	0.019	-2.290	22.040	22.500	0.054	1.112
Right Head Tilted 15°	40740/2605	20M QPSK 50%RB#25	0.061	0.024	-2.450	22.040	22.500	0.068	1.112
Test Position of Body with 10mm	**Test channel /Freq.(MHz)**	**Test Mode**	**SAR Value (W/kg)**		**Power Drift (%)**	**Conducted Power (dBm)**	**Tune-up Limit (dBm)**	**Scaled SAR_{1-g} (W/kg)**	**Scalig Factor**
			1-g	10-g					
SAR Results for Hotspot Exposure Condition									
Front side	40740/2605	20M QPSK 1RB#99	0.165	0.060	-1.160	22.040	22.500	0.183	1.112
Rear side	40740/2605	20M QPSK 1RB#99	0.205	0.099	0.560	22.040	22.500	**0.228**	1.112
Top side	40740/2605	20M QPSK 1RB#99	0.169	0.078	-0.220	22.040	22.500	0.188	1.112
Left side	40740/2605	20M QPSK 1RB#99	0.170	0.074	2.720	22.040	22.500	0.189	1.112
Right side	40740/2605	20M QPSK 1RB#99	0.173	0.063	1.140	22.040	22.500	0.192	1.112
Front side	40740/2605	20M QPSK 50%RB#25	0.179	0.077	2.190	22.040	22.500	0.199	1.112
Rear side	40740/2605	20M QPSK 50%RB#25	0.173	0.073	-4.920	22.040	22.500	0.192	1.112
Top side	40740/2605	20M QPSK 50%RB#25	0.184	0.067	1.120	22.040	22.500	0.205	1.112
Left side	40740/2605	20M QPSK 50%RB#25	0.176	0.065	-2.960	22.040	22.500	0.196	1.112
Right side	40740/2605	20M QPSK 50%RB#25	0.175	0.078	-0.320	22.040	22.500	0.195	1.112

9.2.12 Results overview of Wi-Fi 2.4G

Test Position of Head	Test channel /Freq.(MHz)	Test Mode	SAR Value (W/kg)		Power Drift (%)	Conducted Power (dBm)	Tune-up Limit (dBm)	Scaled SAR_{1-g} (W/kg)	Scaling Factor
			1-g	10-g					
Left Head Touched	6/2437	802.11b	0.212	0.148	4.980	14.870	15.000	0.218	1.030
Left Head Tilted 15°	6/2437	802.11b	0.135	0.125	-4.660	14.870	15.000	0.139	1.030
Right Head Touched	6/2437	802.11b	0.256	0.152	-0.690	14.870	15.000	**0.264**	1.030
Right Head Tilted 15°	6/2437	802.11b	0.143	0.124	1.950	14.870	15.000	0.147	1.030
Test Position of Body with 10mm	**Test channel /Freq.(MHz)**	**Test Mode**	**SAR Value (W/kg)**		**Power Drift (%)**	**Conducted Power (dBm)**	**Tune-up Limit (dBm)**	**Scaled SAR_{1-g} (W/kg)**	**Scaling Factor**
			1-g	10-g					
SAR Results for Hotspot Exposure Condition									
Front side	6/2437	802.11b	0.100	0.040	-0.800	14.870	15.000	0.103	1.030
Rear side	6/2437	802.11b	0.123	0.063	-2.230	14.870	15.000	**0.127**	1.030
Bottom side	6/2437	802.11b	0.089	0.035	-2.910	14.870	15.000	0.092	1.030
Bottom side	6/2437	802.11b	0.073	0.031	0.445	14.870	15.000	0.075	1.030
Right side	6/2437	802.11b	0.093	0.036	-2.730	14.870	15.000	0.096	1.030

10 Multiple Transmitter Information

The SAR measurement positions of each side are as below:

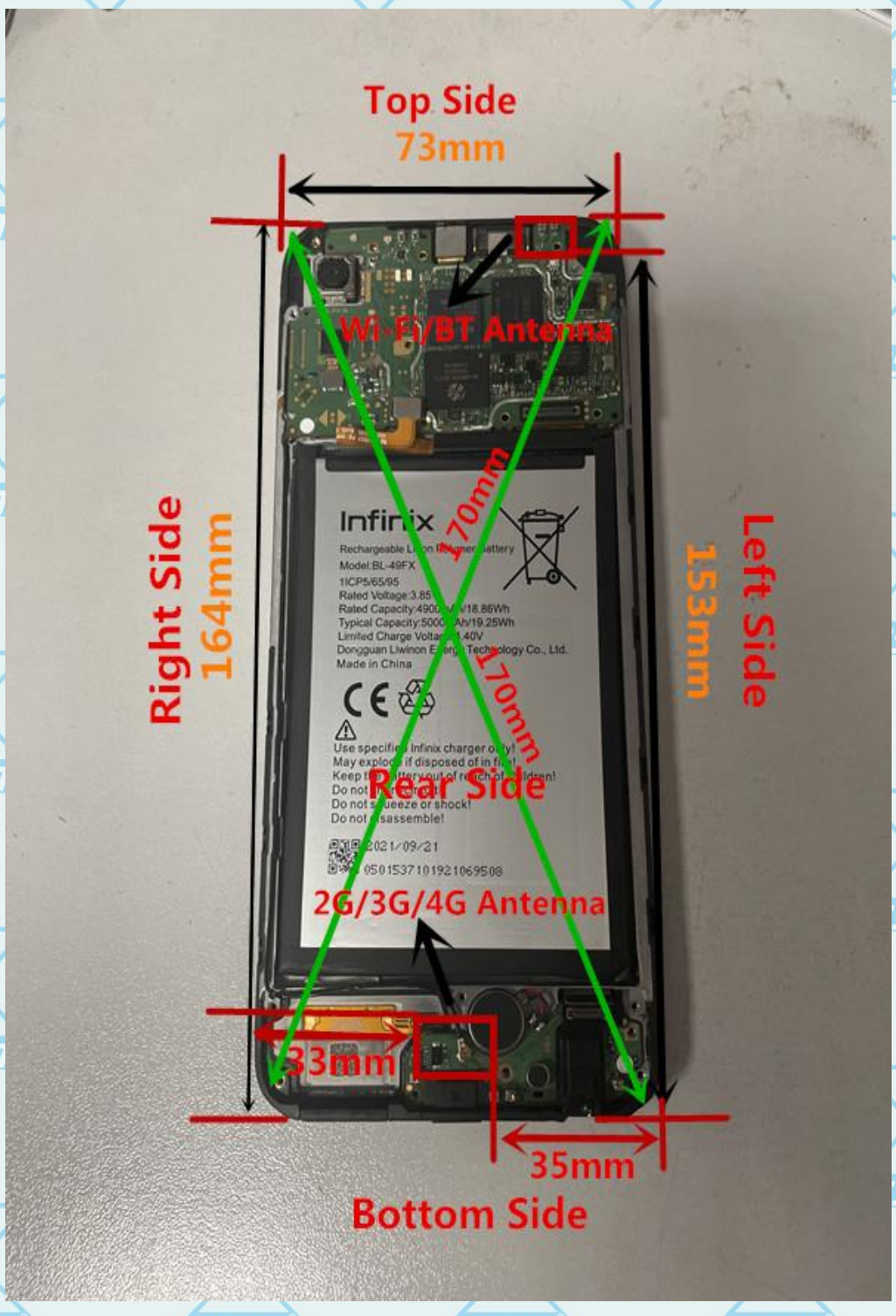

< Rear Side >

Mode	Front side	Rear side	Left side	Right side	Top side	Bottom side
2G/3G/4G Antenna	Yes	Yes	Yes	Yes	No	Yes
Wi-Fi/BT Antenna	Yes	Yes	No	Yes	Yes	No

1) Per KDB941225 D06v01r01, the DUT Dimension is bigger than 9 cm x 5 cm, so 10mm is chosen as the test separation distance for Hotspot mode. When the antenna-to-edge distance is greater than 2.5cm,such position does not need to be tested.

10.1.1 Stand-alone SAR test exclusion

The 1-g and 10-g SAR test exclusion thresholds for 100 MHz to 6 GHz at test separation distances ≤ 50 mm are determined by:

[(max. power of channel, including tune-up tolerance, mW)/(min. test separation distance, mm)] · [√f(GHz)] ≤ 3.0 for 1-g SAR and ≤ 7.5 for 10-g extremity SAR,where

• f(GHz) is the RF channel transmit frequency in GHz

• Power and distance are rounded to the nearest mW and mm before calculation

• The result is rounded to one decimal place for comparison

When the minimum test separation distance is < 5 mm, a distance of 5 mm is applied to determine SAR test exclusion.

a)Head position

Mode	Pmax(dBm)	Pmax(mW)	Distance(mm)	f(GHz)	Calculation Result	exclusion Threshold	SAR test exclusion
BT	6.5	4.47	5.00	2.45	1.40	3.00	Yes

Body-Worn position

Mode	Pmax(dBm)	Pmax(mW)	Distance(mm)	f(GHz)	Calculation Result	exclusion Threshold	SAR test exclusion
BT	6.5	4.47	10.00	2.45	0.70	3.00	Yes

When the standalone SAR test exclusion applies to an antenna that transmits simultaneously with other antennas, the standalone SAR must be estimated according to the following to determine simultaneous transmission SAR test exclusion

(max. power of channel, including tune-up tolerance, mW)/(min. test separation distance, mm)]·[√f(GHz)/x] W/kg for test separation distances ≤ 50 mm, where x = 7.5 for 1-g SAR.

When the minimum test separation distance is < 5 mm, a distance of 5 mm is applied to determine SAR test exclusion.

Mode	Position	Pmax(dBm)	Pmax(mW)	Distance(mm)	f(GHz)	X	Estimated SAR(W/Kg)
BT	Head	6.5	4.47	5.00	2.45	7.50	0.174
BT	Body	6.5	4.47	10.00	2.45	7.50	0.087

10.1.2 Simultaneous Transmission Possibilities

The Simultaneous Transmission Possibilities are as below:

Simultaneous Transmission Possibilities				
Simultaneous Tx Combination	Configuration	Head	Body	Hotspot
1	GSM/GPRS/UMTS/LTE +Wi-Fi	YES	YES	YES
2	GSM/GPRS/UMTS/LTE +BT	YES	NO	NO

Note: The device does not support simultaneous BT and Wi-Fi ,because the BT and Wi-Fi share the same antenna and can't transmit simultaneously.

10.1.3 SAR Summation Scenario

Test Position		Scaled SAR_{Max}		$\sum_{1-g}$ SAR
		GSM850	Wi-Fi (2.4G)	
Head	Left Head Touched	0.458	0.218	0.676
	Left Head Tilted 15°	0.425	0.139	0.564
	Right Head Touched	0.427	0.264	**0.691**
	Right Head Tilted 15°	0.434	0.147	0.581
Hotspot	Front side	0.092	0.103	0.195
	Rear side	0.129	0.127	0.256
	Bottom side	0.087	0.092	0.179
	Left side	0.099	0.075	0.174
	Right side	0.101	0.096	0.197

Note: Simultaneous Tx Combination of GSM850 and Wi-Fi

Test Position		Scaled SAR_{Max}		$\sum_{1-g}$ SAR
		GSM1900	Wi-Fi (2.4G)	
Head	Left Head Touched	0.746	0.218	**0.964**
	Left Head Tilted 15°	0.705	0.139	0.844
	Right Head Touched	0.719	0.264	0.983
	Right Head Tilted 15°	0.710	0.147	0.857
Hotspot	Front side	0.200	0.103	0.303
	Rear side	0.170	0.127	0.297
	Bottom side	0.166	0.092	0.258
	Left side	0.175	0.075	0.250
	Right side	0.177	0.096	0.273

Note: Simultaneous Tx Combination of GSM1900 and Wi-Fi

Test Position		Scaled SAR_{Max}		$\sum_{1-g}$ SAR
		UMTS Band II	Wi-Fi (2.4G)	
Head	Left Head Touched	0.653	0.218	**0.871**
	Left Head Tilted 15°	0.620	0.139	0.759
	Right Head Touched	0.617	0.264	0.881
	Right Head Tilted 15°	0.626	0.147	0.773
Hotspot	Front side	0.215	0.103	0.318
	Rear side	0.242	0.127	0.369
	Bottom side	0.216	0.092	0.308
	Left side	0.213	0.075	0.288
	Right side	0.213	0.096	0.309

Note: Simultaneous Tx Combination of UMTS Band II and Wi-Fi

Test Position		Scaled SAR_{Max}		$\sum_{1-g}$ SAR
		UMTS Band IV	Wi-Fi (2.4G)	
Head	Left Head Touched	0.686	0.218	**0.904**
	Left Head Tilted 15°	0.703	0.139	0.842
	Right Head Touched	0.727	0.264	0.991
	Right Head Tilted 15°	0.685	0.147	0.832
Hotspot	Front side	0.252	0.103	0.355
	Rear side	0.278	0.127	0.405
	Bottom side	0.252	0.092	0.344
	Left side	0.247	0.075	0.322
	Right side	0.243	0.096	0.339

Note: Simultaneous Tx Combination of UMTS Band IV and Wi-Fi

Test Position		Scaled SAR_{Max}		$\sum_{1-g}$ SAR
		UMTS Band V	Wi-Fi (2.4G)	
Head	Left Head Touched	0.433	0.218	0.651
	Left Head Tilted 15°	0.440	0.139	0.579
	Right Head Touched	0.473	0.264	**0.737**
	Right Head Tilted 15°	0.443	0.147	0.590
Hotspot	Front side	0.108	0.103	0.211
	Rear side	0.149	0.127	0.276
	Bottom side	0.110	0.092	0.202
	Left side	0.127	0.075	0.202
	Right side	0.117	0.096	0.213

Note: Simultaneous Tx Combination of UMTS Band V and Wi-Fi

Test Position		Scaled SAR_{Max}		$\sum_{1-g}$ SAR
		LTE Band II	Wi-Fi (2.4G)	
Head	Left Head Touched	0.388	0.218	0.606
	Left Head Tilted 15°	0.204	0.139	0.343
	Right Head Touched	0.454	0.264	**0.718**
	Right Head Tilted 15°	0.362	0.147	0.509
Hotspot	Front side	0.255	0.103	0.358
	Rear side	0.137	0.127	0.264
	Bottom side	0.228	0.092	0.320
	Left side	0.228	0.075	0.303
	Right side	0.232	0.096	0.328

Note: Simultaneous Tx Combination of LTE Band II and Wi-Fi

Test Position		Scaled SAR_{Max}		$\sum_{1-g}$ SAR
		LTE Band IV	Wi-Fi (2.4G)	
Head	Left Head Touched	0.661	0.218	**0.879**
	Left Head Tilted 15°	0.640	0.139	0.779
	Right Head Touched	0.430	0.264	0.694
	Right Head Tilted 15°	0.639	0.147	0.786
Hotspot	Front side	0.227	0.103	0.330
	Rear side	0.258	0.127	0.385
	Bottom side	0.227	0.092	0.319
	Left side	0.237	0.075	0.312
	Right side	0.228	0.096	0.324

Note: Simultaneous Tx Combination of LTE Band IV and Wi-Fi

Test Position		Scaled SAR_{Max}		$\sum_{1-g}$ SAR
		LTE Band V	Wi-Fi (2.4G)	
Head	Left Head Touched	0.266	0.218	0.484
	Left Head Tilted 15°	0.280	0.139	0.419
	Right Head Touched	0.305	0.264	**0.569**
	Right Head Tilted 15°	0.270	0.147	0.417
Hotspot	Front side	0.124	0.103	0.227
	Rear side	0.161	0.127	0.288
	Bottom side	0.128	0.092	0.220
	Left side	0.135	0.075	0.210
	Right side	0.122	0.096	0.218

Note: Simultaneous Tx Combination of LTE Band V and Wi-Fi

Test Position		Scaled SAR_{Max}		$\sum_{1-g}$ SAR
		LTE Band VII	Wi-Fi (2.4G)	
Head	Left Head Touched	0.505	0.218	0.723
	Left Head Tilted 15°	0.512	0.139	0.651
	Right Head Touched	0.535	0.264	**0.799**
	Right Head Tilted 15°	0.513	0.147	0.660
Hotspot	Front side	0.222	0.103	0.325
	Rear side	0.238	0.127	0.365
	Bottom side	0.202	0.092	0.294
	Left side	0.315	0.075	0.390
	Right side	0.201	0.096	0.297

Note: Simultaneous Tx Combination of LTE Band VII and Wi-Fi

Test Position		Scaled SAR_{Max}		$\sum_{1-g}$ SAR
		LTE Band XXXVIII	Wi-Fi (2.4G)	
Head	Left Head Touched	0.366	0.218	0.584
	Left Head Tilted 15°	0.358	0.139	0.497
	Right Head Touched	0.393	0.264	**0.657**
	Right Head Tilted 15°	0.362	0.147	0.509
Hotspot	Front side	0.234	0.103	0.337
	Rear side	0.283	0.127	0.410
	Bottom side	0.251	0.092	0.343
	Left side	0.259	0.075	0.334
	Right side	0.249	0.096	0.345

Note: Simultaneous Tx Combination of LTE Band XXXVIII and Wi-Fi

Test Position		Scaled SAR_{Max}		$\sum_{1-g}$ SAR
		LTE Band XLI	Wi-Fi (2.4G)	
Head	Left Head Touched	0.054	0.218	0.272
	Left Head Tilted 15°	0.061	0.139	0.200
	Right Head Touched	0.099	0.264	**0.363**
	Right Head Tilted 15°	0.056	0.147	0.203
Hotspot	Front side	0.183	0.103	0.286
	Rear side	0.228	0.127	0.355
	Bottom side	0.188	0.092	0.280
	Left side	0.189	0.075	0.264
	Right side	0.192	0.096	0.288

Note: Simultaneous Tx Combination of LTE Band XLI and Wi-Fi

MAX.$\sum SAR_{1g}$ = 0.964W/kg<1.6 W/kg, so the Simultaneous SAR is not required for Wi-Fi and GSM&UMTS&LTE antenna.

Test Position		Scaled SAR_{Max}		$\sum_{1-g}$ SAR	SPLSP
		GSM850	BT		
Head	Left Head Touched	0.458	0.174	**0.632**	NA
	Left Head Tilted 15°	0.425	0.174	0.599	NA
	Right Head Touched	0.427	0.174	0.601	NA
	Right Head Tilted 15°	0.434	0.174	0.608	NA

Note: Simultaneous Tx Combination of GSM850 and BT

Test Position		Scaled SAR_{Max}		$\sum_{1-g}$ SAR	SPLSP
		GSM1900	BT		
Head	Left Head Touched	0.746	0.174	**0.920**	NA
	Left Head Tilted 15°	0.705	0.174	0.879	NA
	Right Head Touched	0.719	0.174	0.893	NA
	Right Head Tilted 15°	0.710	0.174	0.884	NA

Note: Simultaneous Tx Combination of GSM1900 and BT

Test Position		Scaled SAR_{Max}		$\sum_{1-g}$ SAR	SPLSP
		UMTS Band II	BT		
Head	Left Head Touched	0.311	0.148	**0.459**	NA
	Left Head Tilted 15°	0.166	0.148	0.314	NA
	Right Head Touched	0.147	0.148	0.295	NA
	Right Head Tilted 15°	0.137	0.148	0.285	NA

Note: Simultaneous Tx Combination of UMTS Band II and BT

Test Position		Scaled SAR_{Max}		$\sum_{1-g}$ SAR	SPLSP
		UMTS Band IV	BT		
Head	Left Head Touched	0.321	0.148	**0.469**	NA
	Left Head Tilted 15°	0.136	0.148	0.284	NA
	Right Head Touched	0.131	0.148	0.279	NA
	Right Head Tilted 15°	0.127	0.148	0.275	NA

Note: Simultaneous Tx Combination of UMTS Band IV and BT

Test Position		Scaled SAR_{Max}		$\sum_{1-g}$ SAR	SPLSP
		UMTS Band V	BT		
Head	Left Head Touched	0.311	0.174	**0.485**	NA
	Left Head Tilted 15°	0.166	0.174	0.340	NA
	Right Head Touched	0.147	0.174	0.321	NA
	Right Head Tilted 15°	0.137	0.174	0.311	NA

Note: Simultaneous Tx Combination of UMTS Band V and BT

Test Position		Scaled SAR_{Max}		$\sum_{1-g}$ SAR	SPLSP
		LTE Band II	BT		
Head	Left Head Touched	0.388	0.174	0.562	NA
	Left Head Tilted 15°	0.204	0.174	0.378	NA
	Right Head Touched	0.454	0.174	**0.628**	NA
	Right Head Tilted 15°	0.362	0.174	0.536	NA

Note: Simultaneous Tx Combination of LTE Band II and BT

Test Position		Scaled SAR_{Max}		$\sum_{1-g}$ SAR	SPLSP
		LTE Band IV	BT		
Head	Left Head Touched	0.661	0.174	**0.835**	NA
	Left Head Tilted 15°	0.640	0.174	0.814	NA
	Right Head Touched	0.430	0.174	0.604	NA
	Right Head Tilted 15°	0.639	0.174	0.813	NA

Note: Simultaneous Tx Combination of LTE Band IV and BT

Test Position		Scaled SAR_{Max}		$\sum_{1-g}$ SAR	SPLSP
		LTE Band V	BT		
Head	Left Head Touched	0.266	0.174	0.440	NA
	Left Head Tilted 15°	0.280	0.174	0.454	NA
	Right Head Touched	0.305	0.174	**0.479**	NA
	Right Head Tilted 15°	0.270	0.174	0.444	NA

Note: Simultaneous Tx Combination of LTE Band V and BT

Test Position		Scaled SAR_{Max}		$\sum_{1-g}$ SAR	SPLSP
		LTE Band VII	BT		
Head	Left Head Touched	0.505	0.174	0.679	NA
	Left Head Tilted 15°	0.512	0.174	0.686	NA
	Right Head Touched	0.535	0.174	**0.709**	NA
	Right Head Tilted 15°	0.513	0.174	0.687	NA

Note: Simultaneous Tx Combination of LTE Band VII and BT

Test Position		Scaled SAR_{Max}		$\sum_{1-g}$ SAR	SPLSP
		LTE Band XXXVIII	BT		
Head	Left Head Touched	0.366	0.174	0.540	NA
	Left Head Tilted 15°	0.358	0.174	0.532	NA
	Right Head Touched	0.393	0.174	**0.567**	NA
	Right Head Tilted 15°	0.362	0.174	0.536	NA

Note: Simultaneous Tx Combination of LTE Band XXXVIII and BT

Test Position		Scaled SAR_{Max}		$\sum_{1-g}$ SAR	SPLSP
		LTE Band XLI	BT		
Head	Left Head Touched	0.054	0.174	0.228	NA
	Left Head Tilted 15°	0.061	0.174	0.235	NA
	Right Head Touched	0.099	0.174	**0.273**	NA
	Right Head Tilted 15°	0.056	0.174	0.230	NA

Note: Simultaneous Tx Combination of LTE Band XLI and BT

MAX.$\sum SAR_{1g}$ = 0.920W/kg<1.6 W/kg, so the Simultaneous SAR is not required for BT and GSM&UMTS&LTE antenna.

11 Measurement uncertainty evaluation

11.1 Measurement uncertainty evaluation for SAR test

The following table includes the uncertainty table of the IEEE 1528. The values are determined by Satimo.The breakdown of the individual uncertainties is as follows:

Measurement Uncertainty evaluation for SAR test								
Uncertainty Component	Tol. (±%)	Prob. Dist.	Div.	C_i (1g)	C_i (10g)	1g U_i (±%)	10g U_i (±%)	V_i
measurement system								
Probe Calibration	5.8	N	1	1	1	5.8	5.8	∞
Axial Isotropy	3.5	R	$\sqrt{3}$	$(1-C_p)^{1/2}$	$(1-C_p)^{1/2}$	1.43	1.43	∞
Hemispherical Isotropy	5.9	R	$\sqrt{3}$	$\sqrt{C_p}$	$\sqrt{C_p}$	2.41	2.41	∞
Boundary Effect	1	R	$\sqrt{3}$	1	1	0.58	0.58	∞
Linearity	4.7	R	$\sqrt{3}$	1	1	2.71	2.71	∞
system Detection Limits	1	R	$\sqrt{3}$	1	1	0.58	0.58	∞
Modulation response	3	N	1	1	1	3.00	3.00	∞
Readout Electronics	0.5	N	1	1	1	0.50	0.50	∞
Response Time	0	R	$\sqrt{3}$	1	1	0.00	0.00	∞
Integration Time	1.4	R	$\sqrt{3}$	1	1	0.81	0.81	∞
RF Ambient Conditions-Noise	3	R	$\sqrt{3}$	1	1	1.73	1.73	∞
RF Ambient Conditions-Reflections	3	R	$\sqrt{3}$	1	1	1.73	1.73	∞
Probe Positioner Mechanical Tolerance	1.4	R	$\sqrt{3}$	1	1	0.81	0.81	∞
Probe positioning with respect to Phantom Shell	1.4	R	$\sqrt{3}$	1	1	0.81	0.81	∞
Extrapolation, interpolation and Integration Algorithms for Max.SAR Evaluation	2.3	R	$\sqrt{3}$	1	1	1.33	1.33	∞
Test sample Related								
Test Sample Positioning	2.6	N	1	1	1	2.60	2.60	11
Device Holder Uncertainty	3	N	1	1	1	3.00	3.00	7
Output Power Variation-SAR drift measurement	5	R	$\sqrt{3}$	1	1	2.89	2.89	∞
SAR scaling	2	R	$\sqrt{3}$	1	1	1.15	1.15	∞

Phantom and Tissue Parameters								
Phantom Uncertainty (shape and thickness tolerances)	4	R	$\sqrt{3}$	1	1	2.31	2.31	∞
Uncertainty in SAR correction for deviation (in permittivity and conductivity)	2	N	1	1	0.84	2.00	1.68	∞
Liquid conductivity（meas.）	2.5	N	1	0.64	0.43	1.60	1.08	5
Liquid conductivity (target.)	5	R	$\sqrt{3}$	0.64	0.43	1.85	1.24	5
Liquid Permittivity（meas.）	2.5	N	1	0.60	0.49	1.50	1.23	∞
Liquid Permittivity (target.)	5	R	$\sqrt{3}$	0.60	0.49	1.73	1.42	∞
Combined Standard Uncertainly		Rss				10.63	10.54	
Expanded Uncertainty{95% CONFIDENCE INTERRVAL}		k				21.26	21.08	

11.2 Measurement uncertainty evaluation for system check

The following table includes the uncertainty table of the IEEE 1528. The values are determined by Satimo.The breakdown of the individual uncertainties is as follows:

Uncertainty For System Performance Check								
Uncertainty Component	Tol. (±%)	Prob. Dist.	Div.	C_i 1g	C_i 10g	1g U_i(±%)	10g U_i (±%)	V_i
measurement system								
Probe Calibration	5.8	N	1	1	1	5.80	5.80	∞
Axial Isotropy	3.5	R	$\sqrt{3}$	$(1-C_p)^{1/2}$	$(1-C_p)^{1/2}$	1.43	1.43	∞
Hemispherical Isotropy	5.9	R	$\sqrt{3}$	$\sqrt{C_p}$	$\sqrt{C_p}$	2.41	2.41	∞
Boundary Effect	1	R	$\sqrt{3}$	1	1	0.58	0.58	∞
Linearity	4.7	R	$\sqrt{3}$	1	1	2.71	2.71	∞
system detection Limits	1	R	$\sqrt{3}$	1	1	0.58	0.58	∞
Modulation response	0	N	1	1	1	0.00	0.00	∞
Readout Electronics	0.5	N	1	1	1	0.50	0.50	∞
Response Time	0	R	$\sqrt{3}$	1	1	0.00	0.00	∞
Integration Time	1.4	R	$\sqrt{3}$	1	1	0.81	0.81	∞
RF ambient Conditions - Noise	3	R	$\sqrt{3}$	1	1	1.73	1.73	∞
RF ambient Conditions – Reflections	3	R	$\sqrt{3}$	1	1	1.73	1.73	∞
Probe positioned Mechanical Tolerance	1.4	R	$\sqrt{3}$	1	1	0.81	0.81	∞
Probe positioning with respect to Phantom Shell	1.4	R	$\sqrt{3}$	1	1	0.81	0.81	∞
Extrapolation, interpolation and integration Algorithms for Max. SAR Evaluation	2.3	R	$\sqrt{3}$	1	1	1.33	1.33	∞
Dipole								
Deviation of experimental source from numerical source	4	N	1	1	1	4.00	4.00	∞
Input power and SAR drift measurement	5	R	$\sqrt{3}$	1	1	2.89	2.89	∞
Dipole axis to liquid Distance	2	R	$\sqrt{3}$	1	1	1.16	1.16	∞

Phantom and Tissue Parameters								
Phantom Uncertainty (shape and thickness tolerances)	4	R	$\sqrt{3}$	1	1	2.31	2.31	∞
Uncertainty in SAR correction for deviation (in permittivity and conductivity)	2	N	1	1	0.84	2.00	1.68	∞
Liquid conductivity（meas.）	2.5	N	1	0.64	0.43	1.60	1.08	5
Liquid conductivity (target.)	5	R	$\sqrt{3}$	0.64	0.43	1.85	1.24	5
Liquid Permittivity（meas.）	2.5	N	1	0.60	0.49	1.50	1.23	∞
Liquid Permittivity (target.)	5	R	$\sqrt{3}$	0.60	0.49	1.73	1.41	∞
Combined Standard Uncertainty		Rss				10.28	9.98	
Expanded Uncertainty (95% Confidence interval)		k				20.57	19.95	

12 Test equipment and ancillaries used for tests

To simplify the identification of the test equipment and/or ancillaries which were used, the reporting of the relevant test cases only refer to the test item number as specified in the table below.

	Manufacturer	Device Type	Type(Model)	Serial number	calibration	
					Last Cal.	Due Date
☒	SATIMO	COMOSAR DOSIMETRIC E FIELD PROBE	SSE5	SN 36/20 EPGO343	2020-12-10	2021-12-09
☐	SATIMO	COMOSAR 750 MHz REFERENCE DIPOLE	SID750	SN 48/16 DIP0G750-444	2020-06-25	2023-06-24
☒	SATIMO	COMOSAR 835 MHz REFERENCE DIPOLE	SID835	SN 14/13 DIP0G835-235	2020-06-25	2023-06-24
☐	SATIMO	COMOSAR 900 MHz REFERENCE DIPOLE	SID900	SN 14/13 DIP0G900-231	2020-06-25	2023-06-24
☒	SATIMO	COMOSAR 1800 MHz REFERENCE DIPOLE	SID1800	SN 14/13 DIP1G800-232	2020-06-25	2023-06-24
☒	SATIMO	COMOSAR 1900 MHz REFERENCE DIPOLE	SID1900	SN 14/13 DIP1G900-236	2020-06-25	2023-06-24
☒	SATIMO	COMOSAR 2000 MHz REFERENCE DIPOLE	SID2000	SN 14/13 DIP2G000-237	2020-06-25	2023-06-24
☒	SATIMO	COMOSAR 2450 MHz REFERENCE DIPOLE	SID2450	SN 14/13 DIP2G450-238	2020-06-25	2023-06-24
☒	SATIMO	COMOSAR 2600 MHz REFERENCE DIPOLE	SID2600	SN 28/14 DIP2G600-327	2020-06-25	2023-06-24
☒	SATIMO	Software	OPENSAR	N/A	N/A	N/A
☒	SATIMO	Phantom	COMOSAR IEEE SAM PHANTOM	SN 14/13 SAM99	N/A	N/A
☒	R & S	Universal Radio Communication Tester	CMU 200	119733	2021-11-05	2022-11-04
☒	R & S	Universal Radio Communication Tester	CMW500	144459	2021-11-05	2022-11-04
☒	HP	Network Analyser	8753D	3410A08889	2021-11-05	2022-11-04
☒	HP	Signal Generator	E4421B	GB39340770	2021-11-05	2022-11-04
☒	Keithley	Multimeter	Keithley 2000	4014539	2021-11-05	2022-11-04
☒	SATIMO	Amplifier	Power Amplifier	MODU-023-A-0004	2021-11-05	2022-11-04
☒	Agilent	Power Meter	E4418B	GB43312909	2021-11-05	2022-11-04
☒	Agilent	Power Meter Sensor	E4412A	MY41500046	2021-11-05	2022-11-04

Annex A: System performance verification

(**Please See the SAR Measurement Plots of annex A.**)

Annex B: Measurement results

(**Please See the SAR Measurement Plots of annex B.**)

Annex C: Calibration reports

(Please See the Calibration reports of annex C.)