FCC REPORT
(LTE)

Applicant:	INFINIX MOBILITY LIMITED
Address of Applicant:	FLAT 39 8/F BLOCK D WAH LOK INDUSTRIAL CENTRE 31-35 SHAN MEI STREET FOTAN NT
Equipment Under Test (EUT)	
Product Name:	Mobile Phone
Model No.:	X6817
Trade mark:	Infinix
FCC ID:	2AIZN-X6817
Applicable standards:	FCC CFR Title 47 Part 2 FCC CFR Title 47 Part 22 Subpart H FCC CFR Title 47 Part 24 Subpart E FCC CFR Title 47 Part 27 Subpart L FCC CFR Title 47 Part 27 Subpart M
Date of sample receipt:	22 Dec., 2021
Date of Test:	23 Dec., 2021 to 16 Feb., 2022
Date of report issued:	17 Feb., 2022
Test Result:	PASS*

*In the configuration tested, the EUT complied with the standards specified above.

Authorized Signature:

Bruce Zhang
Laboratory Manager

This report details the results of the testing carried out on one sample. The results contained in this test report do not relate to other samples of the same product and does not permit the use of the JYT product certification mark. The manufacturer should ensure that all products in series production are in conformity with the product sample detailed in this report.

This report may only be reproduced and distributed in full. If the product in this report is used in any configuration other than that detailed in the report, the manufacturer must ensure the new system complies with all relevant standards.

This document cannot be reproduced except in full, without prior written approval of the Company. Any unauthorized alteration, forgery or falsification of the content or appearance of this document is unlawful, and offenders may be prosecuted to the fullest extent of the law. Unless otherwise stated the results shown in this test report refer only to the sample(s) tested and such sample(s) are retained for 90 days only.

2. Version

Version No.	Date	Description
00	*17 Feb., 2022*	*Original*

Tested by: Janet Wei ***Date:*** *17 Feb., 2022*

Test Engineer

Reviewed by: Winner zhang ***Date:*** *17 Feb., 2022*

Project Engineer

3. Contents

Page

1. COVER PAGE 1

2. VERSION 2

3. CONTENTS 3

4. TEST SUMMARY 4

5. GENERAL INFORMATION 5

5.1 CLIENT INFORMATION 5
5.2 GENERAL DESCRIPTION OF E.U.T 5
5.3 TEST ENVIRONMENT AND MODE, AND TEST SAMPLES PLANS 12
5.4 DESCRIPTION OF SUPPORT UNITS 12
5.5 MEASUREMENT UNCERTAINTY 12
5.6 RELATED SUBMITTAL(S) / GRANT (S) 12
5.7 ADDITIONS TO, DEVIATIONS, OR EXCLUSIONS FROM THE METHOD 12
5.8 LABORATORY FACILITY 13
5.9 LABORATORY LOCATION 13
5.10 TEST INSTRUMENTS LIST 14

6. TEST RESULTS 15

6.1 CONDUCTED OUTPUT POWER, ERP AND EIRP 15
6.2 PEAK-TO-AVERAGE RATIO 16
6.3 OCCUPY BANDWIDTH 17
6.4 OUT OF BAND EMISSION AT ANTENNA TERMINALS 18
6.5 FIELD STRENGTH OF SPURIOUS RADIATION MEASUREMENT 19
6.6 FREQUENCY STABILITY V.S. TEMPERATURE MEASUREMENT 33
6.7 FREQUENCY STABILITY V.S. VOLTAGE MEASUREMENT 34

7 TEST SETUP PHOTO 35

8 EUT CONSTRUCTIONAL DETAILS 37

4. Test Summary

Test Items	Section in CFR 47	Result
RF Exposure (SAR)	Part 1.1307 Part 2.1093	Passed (Please refer to SAR Report)
RF Output Power	Part 2.1046 Part 22.913 (a)(5) Part 24.232 (c) Part 27.50 (d)(4) Part 27.50 (h)(2)	Appendix A – LTE
Peak-to-Average Ratio	Part 24.232 (d) Part 22.913 (d) Part 27.50(d)(5)	Appendix B – LTE
Modulation Characteristics	Part 2.1047	Pass
99% & -26 dB Occupied Bandwidth	Part 2.1049 Part 22.917(b) Part 24.238(b) Part 27.53(g) Part 27.53(h)(3) Part 27.53(m)(6)	Appendix C – LTE
Out of band emission at antenna terminals	Part 2.1053 Part 22.917(a) Part 24.238 (a) Part 27.53 (g) Part 27.53 (h) Part 27.53(m)(4)	Appendix D – LTE Appendix E – LTE
Field strength of spurious radiation	Part 22.917(a) Part 24.238 (a) Part 27.53 (g) Part 27.53 (h) Part 27.53(m)	Pass
Frequency stability vs. temperature	Part 22.355 Part 24.235 Part 27.54 Part 2.1055(a)(1)(b)	Appendix F – LTE
Frequency stability vs. voltage	Part 22.355 Part 24.235 Part 27.54 Part 2.1055(a)(1)(b)	Appendix F – LTE

Remark:

1. *Pass: The EUT complies with the essential requirements in the standard.*
2. *The cable insertion loss used by "RF Output Power" and other conduction measurement items is 0.5dB(Fundamental Frequency below 1GHz)/1.0dB(Fundamental Frequency above 1GHz) (provided by the customer).*

Test Method:	*ANSI/TIA-603-E-2016* *ANSI C63.26-2015*

5. General Information

5.1 Client Information

Applicant:	INFINIX MOBILITY LIMITED
Address:	FLAT 39 8/F BLOCK D WAH LOK INDUSTRIAL CENTRE 31-35 SHAN MEI STREET FOTAN NT
Manufacturer:	SHENZHEN TECNO TECHNOLOGY CO.,LTD.
Address:	101, Building 24, Waijing Industrial Park, Fumin Community, Fucheng Street, Longhua District, Shenzhen City, P.R.China

5.2 General Description of E.U.T.

Product Name:	Mobile Phone		
Model No.:	X6817		
Operation Frequency range:	LTE Band 2: TX: 1850MHz-1910MHz RX: 1930MHz-1990MHz LTE Band 4: TX: 1710MHz-1755MHz RX: 2110MHz-2155MHz LTE Band 5: TX: 824MHz-849MHz RX: 869MHz-894MHz LTE Band 7: TX: 2500MHz-2570MHz RX: 2620MHz-2690MHz LTE Band 38: TX: 2570MHz-2620MHz RX: 2570MHz-2620MHz LTE Band 41: TX: 2535MHz-2655MHz RX: 2535MHz-2655MHz		
Modulation type:	☒QPSK	☒16QAM	☒64QAM
Antenna type:	Internal Antenna		
Antenna gain:	LTE Band 2: -0.8 dBi(declare by Applicant) LTE Band 4: -0.8 dBi(declare by Applicant) LTE Band 5: -3.8 dBi(declare by Applicant) LTE Band 7: -0.7 dBi(declare by Applicant) LTE Band 38: -0.7 dBi(declare by Applicant) LTE Band 41: -0.7 dBi(declare by Applicant)		
Power supply:	Rechargeable Li-ion Ploymer Battery DC3.87V-4900mAh		
AC adapter:	Model: U180XSA Input: AC100-240V, 50/60Hz, 0.6A Output: DC 5.0V/2.4A, 7.5V/2.4A		
Remark:	The EUT has two kinds of memory, one is 64+4 memory and the other is 128+6 memory.		
Test Sample Condition:	The applicant provided engineering samples for staying in continuously transmitting for testing.		

Operation Frequency List:

LTE Band 2 (1.4MHz)		LTE Band 2 (3MHz)	
Channel	Frequency (MHz)	Channel	Frequency (MHz)
18607	1850.70	18615	1851.50
18608	1850.80	18616	1851.60
….	….	….	….
18899	1879.90	18899	1879.90
18900	1880.00	18900	1880.00
18901	1880.10	18901	1880.10
…	…	…	…
19193	1909.20	19185	1908.40
19194	1909.30	19186	1908.50
LTE Band 2 (5MHz)		LTE Band 2 (10MHz)	
Channel	Frequency (MHz)	Channel	Frequency (MHz)
18625	1852.50	18650	1855.00
18626	1852.60	18651	1855.10
….	….	….	….
18899	1879.90	18899	1879.90
18900	1880.00	18900	1880.00
18901	1880.10	18901	1880.10
…	…	…	…
19175	1907.40	19150	1904.90
19176	1907.50	19151	1905.00
LTE Band 2 (15MHz)		LTE Band 2 (20MHz)	
Channel	Frequency (MHz)	Channel	Frequency (MHz)
18675	1857.50	18700	1860.00
18676	1857.60	18701	1860.10
….	….	….	….
18899	1879.90	18899	1879.90
18900	1880.00	18900	1880.00
18901	1880.10	18901	1880.10
…	…	…	…
19125	1902.40	19100	1899.90
19126	1902.50	19101	1900.00

LTE Band 4 (1.4MHz)		LTE Band 4 (3MHz)	
Channel	Frequency (MHz)	Channel	Frequency (MHz)
19957	1710.70	19965	1711.50
19958	1710.80	19966	1711.60
….	….	….	….
20174	1732.40	20174	1732.40
20175	1732.50	20175	1732.50
20176	1732.60	20176	1732.60
…	…	…	…
20392	1754.20	20384	1753.40
20393	1754.30	20385	1753.50
LTE Band 4 (5MHz)		LTE Band 4 (10MHz)	
Channel	Frequency (MHz)	Channel	Frequency (MHz)
19975	1712.50	20000	1715.00
19976	1712.60	20001	1715.10
….	….	….	….
20174	1732.40	20174	1732.40
20175	1732.50	20175	1732.50
20176	1732.60	20176	1732.60
…	…	…	…
20374	1752.40	20349	1749.90
20375	1752.50	20350	1750.00
LTE Band 4 (15MHz)		LTE Band 4 (20MHz)	
Channel	Frequency (MHz)	Channel	Frequency (MHz)
20025	1717.50	20050	1720.00
20026	1717.60	20051	1720.10
….	….	….	….
20174	1732.40	20174	1732.40
20175	1732.50	20175	1732.50
20176	1732.60	20176	1732.60
…	…	…	…
20324	1747.40	20299	1744.90
20325	1747.50	20300	1745.00

LTE Band 5 (1.4MHz)		LTE Band 5 (3MHz)	
Channel	Frequency (MHz)	Channel	Frequency (MHz)
20407	824.70	20415	825.50
20408	824.80	20416	825.60
….	….	….	….
20524	836.40	20524	836.40
20525	836.50	20525	836.50
20526	836.60	20526	836.60
…	…	…	…
20642	848.20	20634	847.40
20643	848.30	20635	847.50
LTE Band 5 (5MHz)		LTE Band 5 (10MHz)	
Channel	Frequency (MHz)	Channel	Frequency (MHz)
20425	826.50	20450	829.00
20426	826.60	20451	829.10
….	….	….	….
20524	836.40	20524	836.40
20525	836.50	20525	836.50
20526	836.60	20526	836.60
…	…	…	…
20624	846.40	20599	839.90
20625	846.50	20600	844.00

LTE Band 7 (5MHz)		LTE Band 7 (10MHz)	
Channel	Frequency (MHz)	Channel	Frequency (MHz)
20775	2502.50	20800	2505.00
20776	2502.60	20801	2502.10
….	….	….	….
21099	2534.90	21099	2534.90
21100	2535.00	21100	2535.00
21101	2535.20	21101	2535.20
…	…	…	…
21424	2567.40	21399	2564.90
21425	2567.50	21400	2565.00
LTE Band 7 (15MHz)		LTE Band 7 (20MHz)	
Channel	Frequency (MHz)	Channel	Frequency (MHz)
20825	2507.50	20850	2510.00
20826	2507.60	20851	2510.10
….	….	….	….
21099	2534.90	21099	2534.90
21100	2535.00	21100	2535.00
21101	2535.20	21101	2535.20
…	…	…	…
21374	2562.40	21349	2559.90
21375	2562.50	21350	2560.00

LTE Band 38 (5MHz)		LTE Band 38 (10MHz)	
Channel	Frequency (MHz)	Channel	Frequency (MHz)
Channel	Frequency (MHz)	37800	2575.00
37775	2572.50	37801	2575.10
37776	2572.60	….	….
….	….	37999	2594.90
37999	2594.90	38000	2595.00
38000	2595.00	38001	2595.10
38001	2595.10	…	…
…	…	38199	2614.90
38224	2617.50	38200	2615.00
LTE Band 38 (15MHz)		LTE Band 38 (20MHz)	
Channel	Frequency (MHz)	Channel	Frequency (MHz)
37825	2577.50	37850	2580.00
37826	2577.60	37851	2580.10
….	….	….	….
37999	2594.90	37999	2594.90
38000	2595.00	38000	2595.00
38001	2595.10	38001	2595.10
…	…	…	…
38174	2612.40	38149	2609.90
38175	2612.50	38150	2610.00

LTE Band 41 (5MHz)		LTE Band 41 (10MHz)	
Channel	Frequency (MHz)	Channel	Frequency (MHz)
40065	2537.50	40090	2540.00
40066	2537.60	40091	2540.10
….	….	….	….
40639	2594.90	40639	2594.90
40640	2595.00	40640	2595.00
40641	2595.10	40641	2595.10
…	…	…	…
41214	2652.40	41189	2649.90
41215	2652.50	41190	2650.00
LTE Band 41 (15MHz)		LTE Band 41 (20MHz)	
Channel	Frequency (MHz)	Channel	Frequency (MHz)
40115	2542.50	40140	2545.00
40116	2542.60	40141	2545.10
….	….	….	….
40639	2594.90	40639	2594.90
40640	2595.00	40640	2595.00
40641	2595.10	40641	2595.10
…	…	…	…
41164	2647.40	41139	2644.90
41165	2647.50	41140	2645.00

Regards to the operating frequency range, the lowest frequency, the middle frequency, and the highest frequency of channel were selected to perform the test, and the selected channels as below:

LTE Band 2 (1.4MHz)			LTE Band 2 (3MHz)		
Channel		Frequency (MHz)	Channel		Frequency (MHz)
Lowest channel	18607	1850.70	Lowest channel	18615	1851.50
Middle channel	18900	1880.00	Middle channel	18900	1880.00
Highest channel	19193	1909.30	Highest channel	19185	1908.50
LTE Band 2 (5MHz)			LTE Band 2 (10MHz)		
Channel		Frequency (MHz)	Channel		Frequency (MHz)
Lowest channel	18625	1852.50	Lowest channel	18650	1855.00
Middle channel	18900	1880.00	Middle channel	18900	1880.00
Highest channel	19175	1907.50	Highest channel	19150	1905.00
LTE Band 2 (15MHz)			LTE Band 2 (20MHz)		
Channel		Frequency (MHz)	Channel		Frequency (MHz)
Lowest channel	18675	1857.50	Lowest channel	18700	1860.00
Middle channel	18900	1880.00	Middle channel	18900	1880.00
Highest channel	19125	1902.50	Highest channel	19100	1900.00

LTE Band 4 (1.4MHz)			LTE Band 4 (3MHz)		
Channel:		Frequency (MHz)	Channel		Frequency (MHz)
Lowest channel	19957	1710.70	Lowest channel	19965	1711.50
Middle channel	20175	1732.50	Middle channel	20175	1732.50
Highest channel	20393	1754.30	Highest channel	20385	1753.50
LTE Band 4 (5MHz)			LTE Band 4 (10MHz)		
Channel		Frequency (MHz)	Channel		Frequency (MHz)
Lowest channel	19975	1712.50	Lowest channel	20000	1715.00
Middle channel	20175	1732.50	Middle channel	20175	1732.50
Highest channel	20375	1752.50	Highest channel	20350	1750.00
LTE Band 4 (15MHz)			LTE Band 4 (20MHz)		
Channel		Frequency (MHz)	Channel		Frequency (MHz)
Lowest channel	20025	1717.50	Lowest channel	20050	1720.00
Middle channel	20175	1732.50	Middle channel	20175	1732.50
Highest channel	20325	1747.50	Highest channel	20300	1745.00

LTE Band 5 (1.4MHz)			LTE Band 5 (3MHz)		
Channel:		Frequency (MHz)	Channel		Frequency (MHz)
Lowest channel	20407	824.70	Lowest channel	20415	825.50
Middle channel	20525	836.50	Middle channel	20525	836.50
Highest channel	20643	848.30	Highest channel	20635	847.50
LTE Band 5 (5MHz)			LTE Band 5 (10MHz)		
Channel		Frequency (MHz)	Channel		Frequency (MHz)
Lowest channel	20425	826.50	Lowest channel	20450	829.00
Middle channel	20525	836.50	Middle channel	20525	836.50
Highest channel	20625	846.50	Highest channel	20600	844.00

LTE Band 7 (5MHz)			LTE Band 7 (10MHz)		
Channel		Frequency (MHz)	Channel		Frequency (MHz)
Lowest channel	20775	2502.50	Lowest channel	20800	2505.00
Middle channel	21100	2535.00	Middle channel	21100	2535.00
Highest channel	21425	2567.50	Highest channel	21400	2565.00
LTE Band 7 (15MHz)			LTE Band 7 (20MHz)		
Channel		Frequency (MHz)	Channel		Frequency (MHz)
Lowest channel	20825	2507.50	Lowest channel	20850	2510.00
Middle channel	21100	2535.00	Middle channel	21100	2535.00
Highest channel	21375	2562.50	Highest channel	21350	2560.00

LTE Band 38 (5MHz)			LTE Band 38 (10MHz)		
Channel		Frequency (MHz)	Channel		Frequency (MHz)
Lowest channel	37775	2572.50	Lowest channel	37800	2575.00
Middle channel	38000	2595.00	Middle channel	38000	2595.00
Highest channel	38225	2617.50	Highest channel	38200	2615.00
LTE Band 38 (15MHz)			LTE Band 38 (20MHz)		
Channel		Frequency (MHz)	Channel		Frequency (MHz)
Lowest channel	37825	2577.50	Lowest channel	37850	2580.00
Middle channel	38000	2595.00	Middle channel	38000	2595.00
Highest channel	38175	2612.50	Highest channel	38150	2610.00

LTE Band 41 (5MHz)			LTE Band 41 (10MHz)		
Channel		Frequency (MHz)	Channel		Frequency (MHz)
Lowest channel	40065	2537.50	Lowest channel	40090	2540.00
Middle channel	40640	2595.00	Middle channel	40640	2595.00
Highest channel	41215	2652.50	Highest channel	41190	2650.00
LTE Band 41 (15MHz)			LTE Band 41 (20MHz)		
Channel		Frequency (MHz)	Channel		Frequency (MHz)
Lowest channel	40115	2542.50	Lowest channel	40140	2545.00
Middle channel	40640	2595.00	Middle channel	40640	2595.00
Highest channel	41165	2647.50	Highest channel	41140	2645.00

5.3 Test environment and mode, and test samples plans

Operating Environment:	
Temperature:	Normal: 15℃ ~ 35℃, Extreme: -30℃ ~ +50℃
Humidity:	20 % ~ 75 % RH
Atmospheric Pressure:	1008 mbar
Voltage:	Nominal: 3.87Vdc, Extreme: Low 3.50Vdc, High 4.45Vdc
Test mode:	
LTE QPSK mode	Keep the EUT communication with simulated station in QPSK mode
LTE 16-QAM mode	Keep the EUT communication with simulated station in 16-QAM mode
Remark: The EUT has been tested under continuous transmitting mode. Channel Low, Mid and High for each type band with rated data rate were chosen for full testing. The field strength of spurious radiation emission was measured as EUT stand-up position (H mode) and lie down position (E1, E2 mode) for these modes. Just the worst case position (H mode) shown in report.	
Test Samples Plans:	
Samples Number	**Used for Test Items**
2#	Conducted measurements test method
1#	Radiated measurements test method
1#	EUT constructional details
Remark: *JianYan Testing Group Shenzhen Co., Ltd. is only responsible for the test project data of the above samples, and will keep the above samples for a month.*	

5.4 Description of Support Units

Test Equipment	Manufacturer	Model No.	Serial No.
Simulated Station	Anritsu	MT8820C	6201026545

5.5 Measurement Uncertainty

Parameter	Expanded Uncertainty (Confidence of 95%)
Radiated Emission (9kHz ~ 30MHz electric field) for 3m SAC	3.13 dB
Radiated Emission (9kHz ~ 30MHz magnetic field) for 3m SAC	3.13 dB
Radiated Emission (30MHz ~ 1GHz) for 3m SAC	4.45 dB
Radiated Emission (1GHz ~ 18GHz) for 3m SAC	5.34 dB
Radiated Emission (18GHz ~ 40GHz) for 3m SAC	5.34 dB

5.6 Related Submittal(s) / Grant (s)

This is an original grant, no related submittals and grants.

5.7 Additions to, deviations, or exclusions from the method

No

5.8 Laboratory Facility

The test facility is recognized, certified, or accredited by the following organizations:

- **FCC - Designation No.: CN1211**

JianYan Testing Group Shenzhen Co., Ltd. has been accredited as a testing laboratory by FCC(Federal Communications Commission). The test firm Registration No. is 727551.

- **ISED – CAB identifier.: CN0021**

The 3m Semi-anechoic chamber and 10m Semi-anechoic chamber of JianYan Testing Group Shenzhen Co., Ltd. has been Registered by Certification and Engineering Bureau of Industry Canada for radio equipment testing with Registration No.: 10106A-1.

- **CNAS - Registration No.: CNAS L15527**

JianYan Testing Group Shenzhen Co., Ltd. is accredited to ISO/IEC 17025:2017 General Requirements for the Competence of Testing and Calibration laboratories for the competence of testing. The Registration No. is CNAS L15527.

- **A2LA - Registration No.: 4346.01**

This laboratory is accredited in accordance with the recognized International Standard ISO/IEC 17025:2017 General requirements for the competence of testing and calibration laboratories. The test scope can be found as below link: https://portal.a2la.org/scopepdf/4346-01.pdf

5.9 Laboratory Location

JianYan Testing Group Shenzhen Co., Ltd.
Address: No.101, Building 8, Innovation Wisdom Port, No.155 Hongtian Road, Huangpu Community, Xinqiao Street, Bao'an District, Shenzhen, Guangdong, People's Republic of China.
Tel: +86-755-23118282, Fax: +86-755-23116366
Email: info-JYTee@lets.com, Website: http://jyt.lets.com

5.10 Test Instruments list

Radiated Emission:					
Test Equipment	**Manufacturer**	**Model No.**	**Serial No.**	**Cal.Date (mm-dd-yy)**	**Cal.Due date (mm-dd-yy)**
3m SAC	ETS	RFD-100	Q1984	04-14-2021	04-13-2024
Loop Antenna	SCHWARZBECK	FMZB 1519 B	1519B-044	03-07-2021	03-06-2022
BiConiLog Antenna	SCHWARZBECK	VULB9163	9163-1246	03-07-2021	03-06-2022
Biconical Antenna	SCHWARZBECK	VUBA 9117	9117#359	06-17-2021	06-17-2022
Horn Antenna	SCHWARZBECK	BBHA9120D	912D-916	03-07-2021	03-06-2022
Broad-Band Horn Antenna	SCHWARZBECK	BBHA9170	1067	04-02-2021	04-01-2022
Broad-Band Horn Antenna	SCHWARZBECK	BBHA9170	1068	04-02-2021	04-01-2022
EMI Test Receiver	Rohde & Schwarz	ESRP7	101070	03-03-2021	03-02-2022
Spectrum analyzer	Rohde & Schwarz	FSP30	101454	03-03-2021	03-02-2022
Spectrum analyzer	Keysight	N9010B	MY60240202	10-27-2021	10-26-2022
Simulated Station	Anritsu	MT8820C	6201026545	03-03-2021	03-02-2022
Low Pre-amplifier	SCHWARZBECK	BBV9743B	00305	03-07-2021	03-06-2022
High Pre-amplifier	SKET	LNPA_0118G-50	MF280208233	03-07-2021	03-06-2022
Cable	Qualwave	JYT3M-1G-NN-8M	JYT3M-1	03-07-2021	03-06-2022
Cable	Qualwave	JYT3M-18G-NN-8M	JYT3M-2	03-07-2021	03-06-2022
Cable	Qualwave	JYT3M-1G-BB-5M	JYT3M-3	03-07-2021	03-06-2022
Cable	Bost	JYT3M-40G-SS-8M	JYT3M-4	04-02-2021	04-01-2022
EMI Test Software	Tonscend	TS+	Version:3.0.0.1		

Conducted method:					
Test Equipment	**Manufacturer**	**Model No.**	**Serial No.**	**Cal. Date (mm-dd-yy)**	**Cal. Due date (mm-dd-yy)**
Spectrum Analyzer	Keysight	N9020B	MY57431500	07-02-2021	07-01-2022
Simulated Station	Rohde & Schwarz	CMW500	108209	07-02-2021	07-01-2022
RF Control Unit	Tonscend	JS0806-1	N/A	N/A	N/A
Band Reject Filter Group	Tonscend	JS0806-F	21A8060360	N/A	N/A
Test Software	Tonscend	TS+	Version: 2.6.9.0526		

6. Test results

6.1 Conducted Output Power, ERP and EIRP

Test Requirement:	Part 22.913(a)(5), Part 24.232(c), Part 27.50(d)(4), Part 27.50 (h)(2)
Limit:	LTE Band 2: 2W, LTE Band 4: 1W, LTE Band 5: 7W, LTE Band 7: 2W
Test Setup:	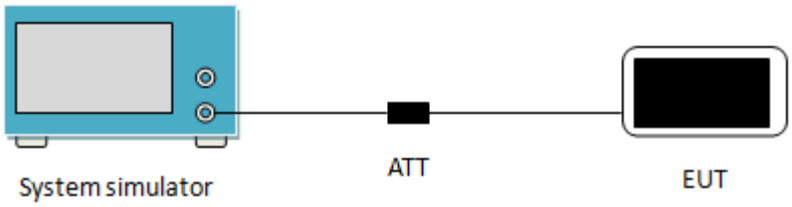
Test Procedure:	The transmitter output was connected to a calibrated attenuator, the other end of which was connected to the CMW500. Transmitter output power was read off in dBm.
Test Instruments:	Refer to section 5.10 for details
Test mode:	Refer to section 5.3 for details
Test results:	Passed

Measurement Data: Refer to Appendix A – LTE

6.2 Peak-to-Average Ratio

Test Requirement:	Part 24.232 (d), Part 27.50(d)(5) , Part 22.913 (d)
Limit:	The peak-to-average ratio (PAR) of the transmission may not exceed 13 dB.
Test Setup:	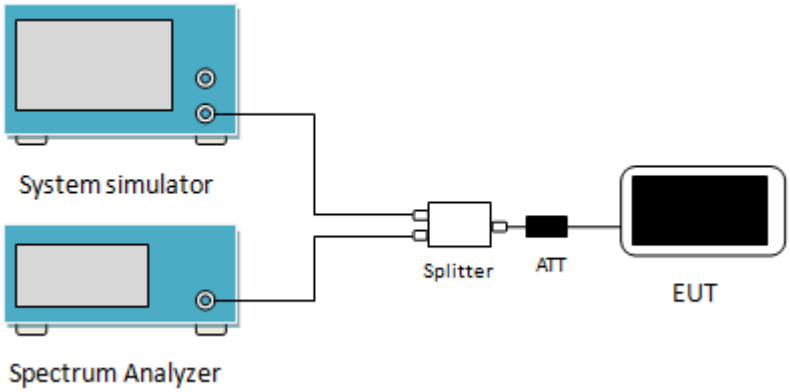
Test Procedure:	1 The RF output of the transceiver was connected to a spectrum analyzer through appropriate attenuation. 2 Set the CCDF option in spectrum analyzer, RBW ≥ OBW, 3 Set the EUT working in highest power level, measured and recorded the 0.1% as PAPR level. 4 Repeat step 1~3 at other frequency and modulations.
Test Instruments:	Refer to section 5.10 for details
Test mode:	Refer to section 5.3 for details
Test results:	Passed

Measurement Data: Refer to Appendix B – LTE

6.3 Occupy Bandwidth

Test Requirement:	Part 2.1049, Part 22.917(b), Part 24.238(b), Part 27.53(g), Part 27.53(h)(3), Part 27.53(m) (6)
Test Setup:	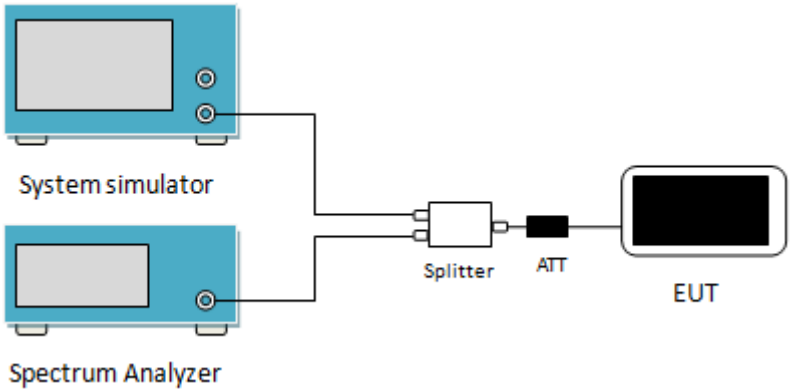
Test Procedure:	1. The EUT's output RF connector was connected with a short cable to the spectrum analyzer 2. RBW was set to about 1% ~ 5% of emission BW, VBW= 3 times RBW. 3. -26dBc display line was placed on the screen (or 99% bandwidth), the occupied bandwidth is the delta frequency between the two points where the display line intersects the signal trace.
Test Instruments:	Refer to section 5.10 for details
Test mode:	Refer to section 5.3 for details
Test results:	Passed

Measurement Data: Refer to Appendix C – LTE

6.4 Out of band emission at antenna terminals

Test Requirement:	Part 2.1053, Part 22.917(a), Part 24.238 (a), Part 27.53(h),Part 27.53(m)(4)
Limit:	LTE Band 2 & 4 & 5 & 7 & 38 & 41: The power of any emission outside a licensee's frequency block shall be attenuated below the transmitter power (P) in watts by at least 43 + 10 $\log_{10}$(P) dB (-13 dBm). LTE Band 7: For mobile digital stations, the attenuation factor shall be not less than 40 + 10 log (P) dB on all frequencies between the channel edge and 5 megahertz from the channel edge, 43 + 10 log (P) dB on all frequencies between 5 megahertz and X megahertz from the channel edge, and 55 + 10 log (P) dB on all frequencies more than X megahertz from the channel edge, where X is the greater of 6 megahertz or the actual emission bandwidth as defined in paragraph (m)(6) of this section. In addition, the attenuation factor shall not be less that 43 + 10 log (P) dB on all frequencies between 2490.5 MHz and 2496 MHz and 55 + 10 log (P) dB at or below 2490.5 MHz.
Test Setup:	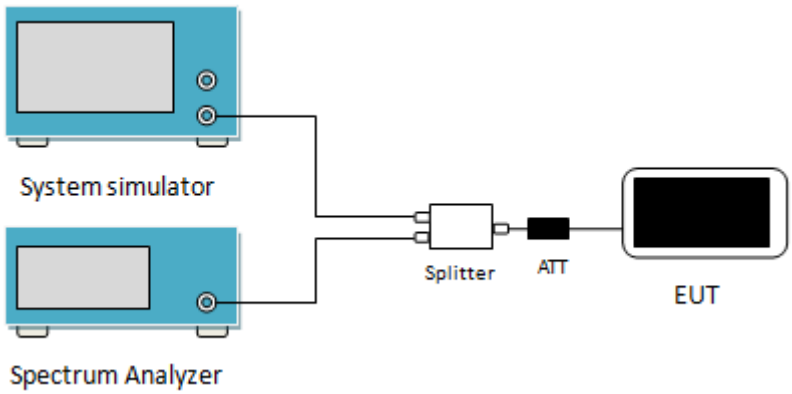
Test Procedure:	1 The RF output of the transceiver was connected to a spectrum analyzer through appropriate attenuation. 2 For the out of band: For Band 5 & 12 & 17 set the RBW=100 kHz, VBW=300 kHz and for Band 2 & 4 & 7 set the RBW=1 MHz, VBW=3 MHz when below 1 GHz, RBW =1 MHz, VBW=3 MHz when above 1 GHz, Start=30MHz, Stop= 10th harmonic. 3 Band Edge Requirements: In the 1 MHz bands immediately outside and adjacent to the frequency block, a resolution bandwidth of at least 1 percent of the emission bandwidth of the fundamental emission of the transmitter may be employed to measure the out of band Emissions.
Test Instruments:	Refer to section 5.10 for details
Test mode:	Refer to section 5.3 for details
Test results:	Passed
Remark:	Pre-scan all RB Size and offset, and found the RB Size and offset of worst case, so the report shows only the worst case test data.

Measurement Data:
Band edge emission: Refer to Appendix D – LTE

Spurious emission: Refer to Appendix E – LTE

6.5 Field strength of spurious radiation measurement

Test Requirement:	Part 22.917(a), Part 24.238 (a), Part 27.53(g), Part 27.53(m), Part 27.53(h)
Limit:	LTE Band 2 & 4 & 5 & 7 & 38 & 41: The power of any emission outside a licensee's frequency block shall be attenuated below the transmitter power (P) in watts by at least 43 + 10 $\log_{10}$(P) dB (-13 dBm). LTE Band 7: For mobile digital stations, the attenuation factor shall be not less than 40 + 10 log (P) dB on all frequencies between the channel edge and 5 megahertz from the channel edge, 43 + 10 log (P) dB on all frequencies between 5 megahertz and X megahertz from the channel edge, and 55 + 10 log (P) dB on all frequencies more than X megahertz from the channel edge, where X is the greater of 6 megahertz or the actual emission bandwidth as defined in paragraph (m)(6) of this section. In addition, the attenuation factor shall not be less that 43 + 10 log (P) dB on all frequencies between 2490.5 MHz and 2496 MHz and 55 + 10 log (P) dB at or below 2490.5 MHz.
Test setup:	Below 1GHz 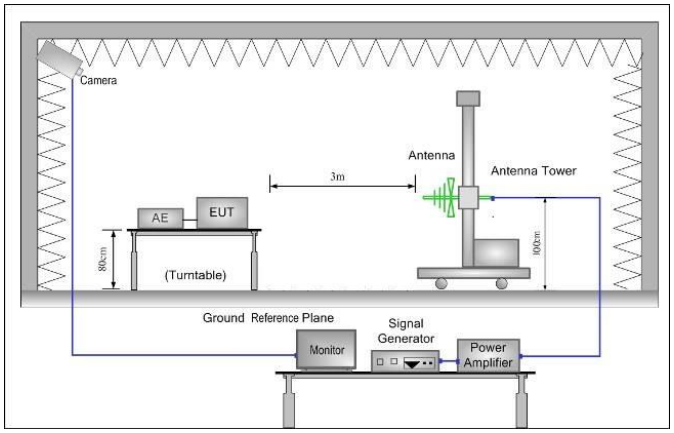 Above 1GHz 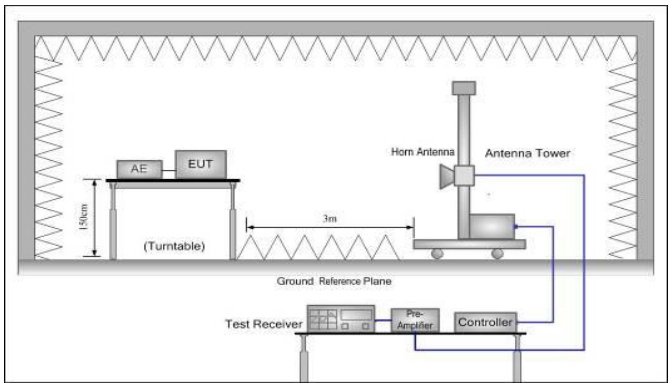
Test Procedure:	1. The EUT was placed on the top of a rotating table 0.8m(below 1GHz)/1.5m(above 1GHz) above the ground at a 3 meter camber. The radiated emission at the fundamental frequency was measured at 3 m with a test antenna and EMI spectrum analyzer. 2. During the tests, the antenna height and the EUT azimuth were varied in order to identify the maximum level of emissions from the EUT. This maximization process was repeated with the EUT positioned in each of its three orthogonal orientations. 3. The frequency range up to tenth harmonic was investigated for each of three fundamental frequency (low, middle and high channels). Once spurious emission was identified, the power of the emission

	was determined using the substitution method. 4. The spurious emissions attenuation was calculated as the difference between radiated power at the fundamental frequency and the spurious emissions frequency. ERP / EIRP = S.G. output (dBm) + Antenna Gain(dB/dBi) – Cable Loss (dB)
Test Instruments:	Refer to section 5.10 for details
Test mode:	Refer to section 5.3 for details.
Test results:	Passed

Measurement Data:

LTE Band 2 part:

Band 2 (1.4MHz)						
Lowest channel						
Frequency (MHz)	Spurous Emission level (dBm)	Factor (dB)	Level at antenna terminals (dBm)	Limit Line (dBm)	Margin (dB)	Polarization
3701.40	-49.57	-1.60	-51.17	-13.00	38.17	Vertical
5552.10	-48.11	5.43	-42.68	-13.00	29.68	Vertical
7402.00	-60.12	13.11	-47.01	-13.00	34.01	Vertical
3701.40	-51.43	-2.09	-53.52	-13.00	40.52	Horizontal
5552.10	-48.84	3.81	-45.03	-13.00	32.03	Horizontal
7402.00	-59.87	11.38	-48.49	-13.00	35.49	Horizontal
Middle channel						
Frequency (MHz)	Spurous Emission level (dBm)	Factor (dB)	Level at antenna terminals (dBm)	Limit Line (dBm)	Margin (dB)	Polarization
3760.00	-49.69	-1.31	-51.00	-13.00	38.00	Vertical
5640.00	-48.40	6.98	-41.42	-13.00	28.42	Vertical
7520.00	-60.44	11.74	-48.70	-13.00	35.70	Vertical
3760.00	-51.15	-1.80	-52.95	-13.00	39.95	Horizontal
5640.00	-48.56	4.30	-44.26	-13.00	31.26	Horizontal
7520.00	-59.85	10.25	-49.60	-13.00	36.60	Horizontal
Highest channel						
Frequency (MHz)	Spurous Emission level (dBm)	Factor (dB)	Level at antenna terminals (dBm)	Limit Line (dBm)	Margin (dB)	Polarization
3816.60	-50.00	-1.02	-51.02	-13.00	38.02	Vertical
5724.90	-48.16	8.20	-39.96	-13.00	26.96	Vertical
7633.20	-60.32	11.17	-49.15	-13.00	36.15	Vertical
3816.60	-51.44	-1.49	-52.93	-13.00	39.93	Horizontal
5724.90	-49.16	5.68	-43.48	-13.00	30.48	Horizontal
7633.20	-60.26	10.01	-50.25	-13.00	37.25	Horizontal
Remark: *The emission levels of below 1 GHz are lower than the limit 20dB and not show in test report.*						

Band 2 (20MHz)						
Lowest channel						
Frequency (MHz)	Spurous Emission level (dBm)	Factor (dB)	Level at antenna terminals (dBm)	Limit Line (dBm)	Margin (dB)	Polarization
3720.00	-49.29	-1.51	-50.80	-13.00	37.80	Vertical
5580.00	-48.21	5.80	-42.41	-13.00	29.41	Vertical
7440.00	-59.79	12.61	-47.18	-13.00	34.18	Vertical
3720.00	-51.62	-2.00	-53.62	-13.00	40.62	Horizontal
5580.00	-49.19	3.95	-45.24	-13.00	32.24	Horizontal
7440.00	-59.98	10.94	-49.04	-13.00	36.04	Horizontal
Middle channel						
Frequency (MHz)	Spurous Emission level (dBm)	Factor (dB)	Level at antenna terminals (dBm)	Limit Line (dBm)	Margin (dB)	Polarization
3760.00	-49.51	-1.31	-50.82	-13.00	37.82	Vertical
5640.00	-48.43	6.98	-41.45	-13.00	28.45	Vertical
7520.00	-59.33	11.74	-47.59	-13.00	34.59	Vertical
3760.00	-51.20	-1.80	-53.00	-13.00	40.00	Horizontal
5640.00	-48.88	4.30	-44.58	-13.00	31.58	Horizontal
7520.00	-59.60	10.25	-49.35	-13.00	36.35	Horizontal
Highest channel						
Frequency (MHz)	Spurous Emission level (dBm)	Factor (dB)	Level at antenna terminals (dBm)	Limit Line (dBm)	Margin (dB)	Polarization
3800.00	-49.45	-1.11	-50.56	-13.00	37.56	Vertical
5700.00	-48.24	8.28	-39.96	-13.00	26.96	Vertical
7600.00	-60.18	11.38	-48.80	-13.00	35.80	Vertical
3800.00	-51.40	-1.61	-53.01	-13.00	40.01	Horizontal
5700.00	-49.58	4.67	-44.91	-13.00	31.91	Horizontal
7600.00	-60.07	10.20	-49.87	-13.00	36.87	Horizontal
Remark: *The emission levels of below 1 GHz are lower than the limit 20dB and not show in test report.*						

LTE Band 4 part:

Band 4 (1.4MHz)						
Lowest channel						
Frequency (MHz)	Spurous Emission level (dBm)	Factor (dB)	Level at antenna terminals (dBm)	Limit Line (dBm)	Margin (dB)	Polarization
3421.40	-54.96	-4.27	-59.23	-13.00	46.23	Vertical
5132.10	-46.81	4.41	-42.40	-13.00	29.40	Vertical
6842.80	-58.45	9.91	-48.54	-13.00	35.54	Vertical
3421.40	-53.98	-4.37	-58.35	-13.00	45.35	Horizontal
5132.10	-54.71	3.95	-50.76	-13.00	37.76	Horizontal
6842.80	-58.03	8.86	-49.17	-13.00	36.17	Horizontal
Middle channel						
Frequency (MHz)	Spurous Emission level (dBm)	Factor (dB)	Level at antenna terminals (dBm)	Limit Line (dBm)	Margin (dB)	Polarization
3465.00	-55.30	-3.15	-58.45	-13.00	45.45	Vertical
5197.50	-47.14	3.90	-43.24	-13.00	30.24	Vertical
6930.00	-58.18	10.67	-47.51	-13.00	34.51	Vertical
3465.00	-53.51	-3.25	-56.76	-13.00	43.76	Horizontal
5197.50	-54.35	3.40	-50.95	-13.00	37.95	Horizontal
6930.00	-58.03	9.35	-48.68	-13.00	35.68	Horizontal
Highest channel						
Frequency (MHz)	Spurous Emission level (dBm)	Factor (dB)	Level at antenna terminals (dBm)	Limit Line (dBm)	Margin (dB)	Polarization
3508.60	-55.26	-2.20	-57.46	-13.00	44.46	Vertical
5262.90	-47.10	3.57	-43.53	-13.00	30.53	Vertical
7017.20	-58.43	11.38	-47.05	-13.00	34.05	Vertical
3508.60	-53.89	-2.35	-56.24	-13.00	43.24	Horizontal
5262.90	-55.06	3.18	-51.88	-13.00	38.88	Horizontal
7017.20	-57.56	9.84	-47.72	-13.00	34.72	Horizontal
Remark: *The emission levels of below 1 GHz are lower than the limit 20dB and not show in test report.*						

Band 4 (20MHz)						
Lowest channel						
Frequency (MHz)	Spurous Emission level (dBm)	Factor (dB)	Level at antenna terminals (dBm)	Limit Line (dBm)	Margin (dB)	Polarization
3440.00	-55.28	-3.87	-59.15	-13.00	46.15	Vertical
5160.00	-46.89	3.71	-43.18	-13.00	30.18	Vertical
6880.00	-58.46	9.08	-49.38	-13.00	36.38	Vertical
3440.00	-53.90	-3.99	-57.89	-13.00	44.89	Horizontal
5160.00	-54.91	4.20	-50.71	-13.00	37.71	Horizontal
6880.00	-48.17	10.27	-37.90	-13.00	24.90	Horizontal
Middle channel						
Frequency (MHz)	Spurous Emission level (dBm)	Factor (dB)	Level at antenna terminals (dBm)	Limit Line (dBm)	Margin (dB)	Polarization
3465.00	-55.12	-3.15	-58.27	-13.00	45.27	Vertical
5197.50	-47.18	3.90	-43.28	-13.00	30.28	Vertical
6930.00	-58.59	10.67	-47.92	-13.00	34.92	Vertical
3465.00	-53.73	-3.25	-56.98	-13.00	43.98	Horizontal
5197.50	-55.15	3.40	-51.75	-13.00	38.75	Horizontal
6930.00	-48.64	9.35	-39.29	-13.00	26.29	Horizontal
Highest channel						
Frequency (MHz)	Spurous Emission level (dBm)	Factor (dB)	Level at antenna terminals (dBm)	Limit Line (dBm)	Margin (dB)	Polarization
3490.00	-54.84	-2.50	-57.34	-13.00	44.34	Vertical
5235.00	-47.28	3.71	-43.57	-13.00	30.57	Vertical
6980.00	-58.27	11.02	-47.25	-13.00	34.25	Vertical
3490.00	-53.46	-2.60	-56.06	-13.00	43.06	Horizontal
5235.00	-54.97	3.27	-51.70	-13.00	38.70	Horizontal
6980.00	-47.95	9.59	-38.36	-13.00	25.36	Horizontal

Remark:

The emission levels of below 1 GHz are lower than the limit 20dB and not show in test report.

LTE Band 5 part:

Band 5 (1.4MHz)						
Lowest channel						
Frequency (MHz)	Spurous Emission level (dBm)	Factor (dB)	Level at antenna terminals (dBm)	Limit Line (dBm)	Margin (dB)	Polarization
1649.40	-54.59	-11.10	-65.69	-13.00	52.69	Vertical
2474.10	-55.71	-6.20	-61.91	-13.00	48.91	Vertical
3298.80	-55.53	-4.96	-60.49	-13.00	47.49	Vertical
1649.40	-53.07	-11.00	-64.07	-13.00	51.07	Horizontal
2474.10	-53.99	-6.54	-60.53	-13.00	47.53	Horizontal
3298.80	-56.09	-5.25	-61.34	-13.00	48.34	Horizontal
Middle channel						
Frequency (MHz)	Spurous Emission level (dBm)	Factor (dB)	Level at antenna terminals (dBm)	Limit Line (dBm)	Margin (dB)	Polarization
1673.30	-54.75	-11.13	-65.88	-13.00	52.88	Vertical
2509.50	-56.14	-6.20	-62.34	-13.00	49.34	Vertical
3346.00	-55.10	-5.03	-60.13	-13.00	47.13	Vertical
1673.30	-52.71	-11.04	-63.75	-13.00	50.75	Horizontal
2509.50	-53.73	-6.51	-60.24	-13.00	47.24	Horizontal
3346.00	-56.18	-5.23	-61.41	-13.00	48.41	Horizontal
Highest channel						
Frequency (MHz)	Spurous Emission level (dBm)	Factor (dB)	Level at antenna terminals (dBm)	Limit Line (dBm)	Margin (dB)	Polarization
1696.60	-54.85	-11.15	-66.00	-13.00	53.00	Vertical
2544.90	-55.69	-6.07	-61.76	-13.00	48.76	Vertical
3393.20	-56.01	-5.09	-61.10	-13.00	48.10	Vertical
1696.60	-52.74	-11.09	-63.83	-13.00	50.83	Horizontal
2544.90	-53.84	-6.38	-60.22	-13.00	47.22	Horizontal
3393.20	-56.39	-5.20	-61.59	-13.00	48.59	Horizontal
Remark: *The emission levels of below 1 GHz are lower than the limit 20dB and not show in test report.*						

Band 5 (10MHz)						
Lowest channel						
Frequency (MHz)	Spurous Emission level (dBm)	Factor (dB)	Level at antenna terminals (dBm)	Limit Line (dBm)	Margin (dB)	Polarization
1658.00	-54.39	-11.11	-65.50	-13.00	52.50	Vertical
2487.00	-55.26	-6.22	-61.48	-13.00	48.48	Vertical
3316.00	-55.04	-4.98	-60.02	-13.00	47.02	Vertical
1658.00	-53.22	-11.02	-64.24	-13.00	51.24	Horizontal
2487.00	-53.67	-6.54	-60.21	-13.00	47.21	Horizontal
3316.00	-55.62	-5.24	-60.86	-13.00	47.86	Horizontal
Middle channel						
Frequency (MHz)	Spurous Emission level (dBm)	Factor (dB)	Level at antenna terminals (dBm)	Limit Line (dBm)	Margin (dB)	Polarization
1673.30	-54.12	-11.13	-65.25	-13.00	52.25	Vertical
2509.50	-55.09	-6.20	-61.29	-13.00	48.29	Vertical
3346.00	-54.56	-5.03	-59.59	-13.00	46.59	Vertical
1673.30	-52.89	-11.05	-63.94	-13.00	50.94	Horizontal
2509.50	-53.58	-6.51	-60.09	-13.00	47.09	Horizontal
3346.00	-55.83	-5.23	-61.06	-13.00	48.06	Horizontal
Highest channel						
Frequency (MHz)	Spurous Emission level (dBm)	Factor (dB)	Level at antenna terminals (dBm)	Limit Line (dBm)	Margin (dB)	Polarization
1688.00	-54.15	-11.14	-65.29	-13.00	52.29	Vertical
2532.00	-55.36	-6.11	-61.47	-13.00	48.47	Vertical
3376.00	-54.57	-5.07	-59.64	-13.00	46.64	Vertical
1688.00	-52.68	-11.07	-63.75	-13.00	50.75	Horizontal
2532.00	-53.82	-6.42	-60.24	-13.00	47.24	Horizontal
3376.00	-56.14	-5.21	-61.35	-13.00	48.35	Horizontal
Remark: *The emission levels of below 1 GHz are lower than the limit 20dB and not show in test report.*						

LTE Band 7 part:

Band 7 (5MHz)						
Lowest channel						
Frequency (MHz)	Spurous Emission level (dBm)	Factor (dB)	Level at antenna terminals (dBm)	Limit Line (dBm)	Margin (dB)	Polarization
5005.00	-56.63	4.56	-52.07	-25.00	27.07	Vertical
7507.50	-58.71	13.14	-45.57	-25.00	20.57	Vertical
10010.00	-59.09	16.93	-42.16	-25.00	17.16	Vertical
5005.00	-56.27	4.56	-51.71	-25.00	26.71	Horizontal
7507.50	-58.91	13.14	-45.77	-25.00	20.77	Horizontal
10010.00	-59.07	16.93	-42.14	-25.00	17.14	Horizontal
Middle channel						
Frequency (MHz)	Spurous Emission level (dBm)	Factor (dB)	Level at antenna terminals (dBm)	Limit Line (dBm)	Margin (dB)	Polarization
5070.00	-57.10	4.55	-52.55	-25.00	27.55	Vertical
7605.00	-58.66	13.58	-45.08	-25.00	20.08	Vertical
10140.00	-59.45	17.44	-42.01	-25.00	17.01	Vertical
5070.00	-56.67	4.55	-52.12	-25.00	27.12	Horizontal
7605.00	-58.69	13.58	-45.11	-25.00	20.11	Horizontal
10140.00	-59.21	17.44	-41.77	-25.00	16.77	Horizontal
Highest channel						
Frequency (MHz)	Spurous Emission level (dBm)	Factor (dB)	Level at antenna terminals (dBm)	Limit Line (dBm)	Margin (dB)	Polarization
5135.00	-57.00	4.62	-52.38	-25.00	27.38	Vertical
7702.50	-58.24	13.24	-45.00	-25.00	20.00	Vertical
10270.00	-59.78	18.40	-41.38	-25.00	16.38	Vertical
5135.00	-56.93	4.62	-52.31	-25.00	27.31	Horizontal
7702.50	-59.18	13.24	-45.94	-25.00	20.94	Horizontal
10270.00	-58.77	18.40	-40.37	-25.00	15.37	Horizontal
Remark: *The emission levels of below 1 GHz are lower than the limit 20dB and not show in test report.*						

Band 7 (20MHz)						
Lowest channel						
Frequency (MHz)	Spurous Emission level (dBm)	Factor (dB)	Level at antenna terminals (dBm)	Limit Line (dBm)	Margin (dB)	Polarization
5020.00	-57.01	4.56	-52.45	-25.00	27.45	Vertical
7530.00	-59.14	13.29	-45.85	-25.00	20.85	Vertical
10040.00	-58.97	16.98	-41.99	-25.00	16.99	Vertical
5020.00	-56.27	4.56	-51.71	-25.00	26.71	Horizontal
7530.00	-58.86	13.29	-45.57	-25.00	20.57	Horizontal
10040.00	-59.44	16.98	-42.46	-25.00	17.46	Horizontal
Middle channel						
Frequency (MHz)	Spurous Emission level (dBm)	Factor (dB)	Level at antenna terminals (dBm)	Limit Line (dBm)	Margin (dB)	Polarization
5070.00	-59.10	4.55	-54.55	-25.00	29.55	Vertical
7605.00	-58.92	13.58	-45.34	-25.00	20.34	Vertical
10140.00	-56.38	17.44	-38.94	-25.00	13.94	Vertical
5070.00	-58.97	4.55	-54.42	-25.00	29.42	Horizontal
7605.00	-59.80	13.58	-46.22	-25.00	21.22	Horizontal
10140.00	-59.13	17.44	-41.69	-25.00	16.69	Horizontal
Highest channel						
Frequency (MHz)	Spurous Emission level (dBm)	Factor (dB)	Level at antenna terminals (dBm)	Limit Line (dBm)	Margin (dB)	Polarization
5120.00	-57.11	4.62	-52.49	-25.00	27.49	Vertical
7680.00	-59.21	13.18	-46.03	-25.00	21.03	Vertical
10240.00	-59.13	18.27	-40.86	-25.00	15.86	Vertical
5120.00	-56.69	4.62	-52.07	-25.00	27.07	Horizontal
7680.00	-58.44	13.18	-45.26	-25.00	20.26	Horizontal
10240.00	-59.13	18.27	-40.86	-25.00	15.86	Horizontal

Remark:

The emission levels of below 1 GHz are lower than the limit 20dB and not show in test report.

LTE Band 38 part:

Band 38 (5MHz)						
Lowest channel						
Frequency (MHz)	Spurous Emission level (dBm)	Factor (dB)	Level at antenna terminals (dBm)	Limit Line (dBm)	Margin (dB)	Polarization
5145.00	-57.13	4.66	-52.47	-25.00	27.47	Vertical
7717.50	-59.32	13.24	-46.08	-25.00	21.08	Vertical
10290.00	-60.21	18.46	-41.75	-25.00	16.75	Vertical
5145.00	-56.56	4.66	-51.90	-25.00	26.90	Horizontal
7717.50	-59.12	13.24	-45.88	-25.00	20.88	Horizontal
10290.00	-60.32	18.46	-41.86	-25.00	16.86	Horizontal
Middle channel						
Frequency (MHz)	Spurous Emission level (dBm)	Factor (dB)	Level at antenna terminals (dBm)	Limit Line (dBm)	Margin (dB)	Polarization
5190.00	-56.70	4.76	-51.94	-25.00	26.94	Vertical
7785.00	-59.44	13.48	-45.96	-25.00	20.96	Vertical
10380.00	-59.73	17.85	-41.88	-25.00	16.88	Vertical
5190.00	-56.87	4.76	-52.11	-25.00	27.11	Horizontal
7785.00	-59.18	13.48	-45.70	-25.00	20.70	Horizontal
10380.00	-60.74	17.85	-42.89	-25.00	17.89	Horizontal
Highest channel						
Frequency (MHz)	Spurous Emission level (dBm)	Factor (dB)	Level at antenna terminals (dBm)	Limit Line (dBm)	Margin (dB)	Polarization
5235.00	-57.47	4.95	-52.52	-25.00	27.52	Vertical
7852.50	-59.64	13.48	-46.16	-25.00	21.16	Vertical
10470.00	-60.30	18.39	-41.91	-25.00	16.91	Vertical
5235.00	-56.84	4.95	-51.89	-25.00	26.89	Horizontal
7852.50	-58.84	13.48	-45.36	-25.00	20.36	Horizontal
10470.00	-60.50	18.39	-42.11	-25.00	17.11	Horizontal

Remark:

The emission levels of below 1 GHz are lower than the limit 20dB and not show in test report.

Band 38 (20MHz)						
Lowest channel						
Frequency (MHz)	Spurous Emission level (dBm)	Factor (dB)	Level at antenna terminals (dBm)	Limit Line (dBm)	Margin (dB)	Polarization
5160.00	-57.41	4.71	-52.70	-25.00	27.70	Vertical
7740.00	-59.64	13.32	-46.32	-25.00	21.32	Vertical
10320.00	-60.47	18.30	-42.17	-25.00	17.17	Vertical
5160.00	-56.72	4.71	-52.01	-25.00	27.01	Horizontal
7740.00	-58.82	13.32	-45.50	-25.00	20.50	Horizontal
10320.00	-59.87	18.30	-41.57	-25.00	16.57	Horizontal
Middle channel						
Frequency (MHz)	Spurous Emission level (dBm)	Factor (dB)	Level at antenna terminals (dBm)	Limit Line (dBm)	Margin (dB)	Polarization
5190.00	-57.81	4.76	-53.05	-25.00	28.05	Vertical
7785.00	-59.16	13.48	-45.68	-25.00	20.68	Vertical
10380.00	-60.68	17.85	-42.83	-25.00	17.83	Vertical
5190.00	-56.60	4.76	-51.84	-25.00	26.84	Horizontal
7785.00	-58.93	13.48	-45.45	-25.00	20.45	Horizontal
10380.00	-60.28	17.85	-42.43	-25.00	17.43	Horizontal
Highest channel						
Frequency (MHz)	Spurous Emission level (dBm)	Factor (dB)	Level at antenna terminals (dBm)	Limit Line (dBm)	Margin (dB)	Polarization
5220.00	-57.15	4.86	-52.29	-25.00	27.29	Vertical
7830.00	-59.62	13.49	-46.13	-25.00	21.13	Vertical
10440.00	-60.21	18.21	-42.00	-25.00	17.00	Vertical
5220.00	-56.23	4.86	-51.37	-25.00	26.37	Horizontal
7830.00	-59.03	13.49	-45.54	-25.00	20.54	Horizontal
10440.00	-60.15	18.21	-41.94	-25.00	16.94	Horizontal

Remark:

The emission levels of below 1 GHz are lower than the limit 20dB and not show in test report.

LTE Band 41 part:

Band 41 (5MHz)						
Lowest channel						
Frequency (MHz)	Spurous Emission level (dBm)	Factor (dB)	Level at antenna terminals (dBm)	Limit Line (dBm)	Margin (dB)	Polarization
5075.00	-57.33	4.56	-52.77	-25.00	27.77	Vertical
7612.50	-59.50	13.14	-46.36	-25.00	21.36	Vertical
10150.00	-60.23	16.89	-43.34	-25.00	18.34	Vertical
5075.00	-57.03	4.56	-52.47	-25.00	27.47	Horizontal
7612.50	-59.13	13.14	-45.99	-25.00	20.99	Horizontal
10150.00	-60.09	16.89	-43.20	-25.00	18.20	Horizontal
Middle channel						
Frequency (MHz)	Spurous Emission level (dBm)	Factor (dB)	Level at antenna terminals (dBm)	Limit Line (dBm)	Margin (dB)	Polarization
5190.00	-56.84	4.76	-52.08	-25.00	27.08	Vertical
7785.00	-59.25	13.48	-45.77	-25.00	20.77	Vertical
10380.00	-60.39	18.00	-42.39	-25.00	17.39	Vertical
5190.00	-56.73	4.76	-51.97	-25.00	26.97	Horizontal
7785.00	-59.19	13.48	-45.71	-25.00	20.71	Horizontal
10380.00	-60.50	18.00	-42.50	-25.00	17.50	Horizontal
Highest channel						
Frequency (MHz)	Spurous Emission level (dBm)	Factor (dB)	Level at antenna terminals (dBm)	Limit Line (dBm)	Margin (dB)	Polarization
5305.00	-57.01	5.50	-51.51	-25.00	26.51	Vertical
7957.50	-59.16	13.31	-45.85	-25.00	20.85	Vertical
10610.00	-60.16	19.50	-40.66	-25.00	15.66	Vertical
5305.00	-57.15	5.50	-51.65	-25.00	26.65	Horizontal
7957.50	-58.68	13.31	-45.37	-25.00	20.37	Horizontal
10610.00	-60.08	19.50	-40.58	-25.00	15.58	Horizontal

Remark:

The emission levels of below 1 GHz are lower than the limit 20dB and not show in test report.

Band 41 (20MHz)						
Lowest channel						
Frequency (MHz)	Spurous Emission level (dBm)	Factor (dB)	Level at antenna terminals (dBm)	Limit Line (dBm)	Margin (dB)	Polarization
5090.00	-57.35	4.56	-52.79	-25.00	27.79	Vertical
7635.00	-59.77	13.29	-46.48	-25.00	21.48	Vertical
10180.00	-60.25	16.93	-43.32	-25.00	18.32	Vertical
5090.00	-56.55	4.56	-51.99	-25.00	26.99	Horizontal
7635.00	-59.36	13.29	-46.07	-25.00	21.07	Horizontal
10180.00	-60.39	16.93	-43.46	-25.00	18.46	Horizontal
Middle channel						
Frequency (MHz)	Spurous Emission level (dBm)	Factor (dB)	Level at antenna terminals (dBm)	Limit Line (dBm)	Margin (dB)	Polarization
5190.00	-56.89	4.76	-52.13	-25.00	27.13	Vertical
7785.00	-59.28	13.48	-45.80	-25.00	20.80	Vertical
10380.00	-59.89	18.00	-41.89	-25.00	16.89	Vertical
5190.00	-56.76	4.76	-52.00	-25.00	27.00	Horizontal
7785.00	-59.52	13.48	-46.04	-25.00	21.04	Horizontal
10380.00	-60.71	18.00	-42.71	-25.00	17.71	Horizontal
Highest channel						
Frequency (MHz)	Spurous Emission level (dBm)	Factor (dB)	Level at antenna terminals (dBm)	Limit Line (dBm)	Margin (dB)	Polarization
5290.00	-57.17	5.41	-51.76	-25.00	26.76	Vertical
7935.00	-59.58	13.33	-46.25	-25.00	21.25	Vertical
10580.00	-60.35	19.67	-40.68	-25.00	15.68	Vertical
5290.00	-56.25	5.41	-50.84	-25.00	25.84	Horizontal
7935.00	-58.95	13.33	-45.62	-25.00	20.62	Horizontal
10580.00	-60.49	19.67	-40.82	-25.00	15.82	Horizontal

Remark:

The emission levels of below 1 GHz are lower than the limit 20dB and not show in test report.

6.6 Frequency stability V.S. Temperature measurement

Test Requirement:	Part 22.355, Part 24.235, Part 27.54, Part 2.1055(a)(1)(b)
Limit:	±2.5 ppm for Band 5 Within authorized band for Band 2 & 4 & 5 & 7 & 38 & 41
Test setup:	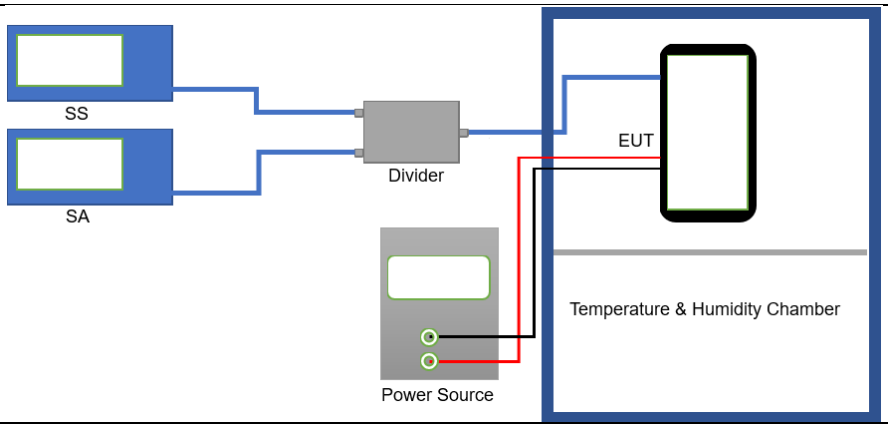
Test procedure:	1. The equipment under test was connected to an external DC power supply and input rated voltage. 2. RF output was connected to a frequency counter or spectrum analyzer via feed through attenuators. 3. The EUT was placed inside the temperature chamber. 4. Set the spectrum analyzer RBW low enough to obtain the desired frequency resolution and measure EUT 25℃ operating frequency as reference frequency. 5. Turn EUT off and set the chamber temperature to –30℃. After the temperature stabilized for approximately 30 minutes recorded the frequency. 6. Repeat step measure with 10℃ increased per stage until the highest temperature of +50℃ reached
Test Instruments:	Refer to section 5.10 for details
Test mode:	Refer to section 5.3 for details
Test results:	Passed

Measurement Data: Refer to Appendix F – LTE

6.7 Frequency stability V.S. Voltage measurement

Test Requirement:	Part 22.355, Part 24.235, Part 27.54, Part 2.1055(a)(1)(b)
Limit:	±2.5 ppm for Band 5 Within authorized band for Band 2 & 4 & 5 & 7 & 38 & 41
Test setup:	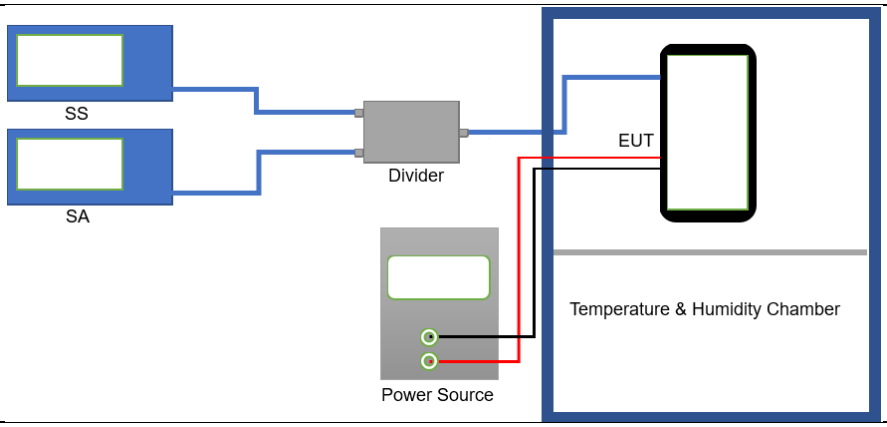
Test procedure:	1. Set chamber temperature to 25℃. Use a variable DC power source to power the EUT and set the voltage to rated voltage. 2. Set the spectrum analyzer RBW low enough to obtain the desired frequency resolution and recorded the frequency. 3. Reduce the input voltage to specify extreme voltage variation (+/-15%) and endpoint, record the maximum frequency change.
Test Instruments:	Refer to section 5.10 for details
Test mode:	Refer to section 5.3 for details
Test results:	Passed

Measurement Data: Refer to Appendix F – LTE