TEST REPORT

Application No.:	SZCR2401000386AT
Applicant:	INFINIX MOBILITY LIMITED
Address of Applicant:	FLAT N 16/F BLOCK B UNIVERSAL INDUSTRIAL CENTRE 19-25 SHAN MEI STREET FOTAN NT HONGKONG
Manufacturer:	INFINIX MOBILITY LIMITED
Address of Manufacturer:	FLAT N 16/F BLOCK B UNIVERSAL INDUSTRIAL CENTRE 19-25 SHAN MEI STREET FOTAN NT HONGKONG
Factory:	SHENZHEN TECNO TECHNOLOGY CO.,LTD.
Address of Factory:	101, Building 23, Waijing Industrial Park, Fumin Community, Fucheng Street, Longhua District, Shenzhen City, P.R.China

Equipment Under Test (EUT):

EUT Name:	Mobile Phone
Model No.:	X6851
Trade Mark:	Infinix
FCC ID:	2AIZN-X6851
Standard(s) :	FCC Part 96.47 FCC KDB 940660 D01 Part 96 CBRS Eqpt v03 WINNF-TS-0122-V1.0.2 CBRS CBSD Test Specification WINNF-18-IN-00178 CBRS End User Device as UUT Test Guidelines
Date of Receipt:	2024-01-29
Date of Test:	2024-01-30 to 2024-01-31
Date of Issue:	2024-01-31
Test Result:	**Pass***

* In the configuration tested, the EUT complied with the standards specified above.

Keny. xu

Keny Xu
EMC Laboratory Manager

Unless otherwise agreed in writing, this document is issued by the Company subject to its General Conditions of Service printed overleaf, available on request or accessible at https://www.sgs.com/en/Terms-and-Conditions. Attention is drawn to the limitation of liability, indemnification and jurisdiction issues defined therein. Any holder of this document is advised that information contained hereon reflects the Company's findings at the time of its intervention only and within the limits of Client's instructions, if any. The Company's sole responsibility is to its Client and this document does not exonerate parties to a transaction from exercising all their rights and obligations under the transaction documents. This document cannot be reproduced except in full, without prior written approval of the Company. Any unauthorized alteration, forgery or falsification of the content or appearance of this document is unlawful and offenders may be prosecuted to the fullest extent of the law. Unless otherwise stated the results shown in this test report refer only to the sample(s) tested and such sample(s) are retained for 30 days only.
Attention: To check the authenticity of testing /inspection report & certificate, please contact us at telephone: (86-755) 8307 1443, or email: CN.Doccheck@sgs.com
No.1 Workshop, M-10, Middle Section, Science & Technology Park, Nanshan District, Shenzhen, Guangdong, China 518057 t (86-755) 26012053 f (86-755) 26710594 www.sgsgroup.com.cn
中国·广东·深圳市南山区科技园中区M-10栋1号厂房 邮编:518057 t (86-755) 26012053 f (86-755) 26710594 sgs.china@sgs.com

Revision Record				
Version	**Chapter**	**Date**	**Modifier**	**Remark**
01		2024-01-31		Original

Authorized for issue by:				
		Benson Wang Benson Wang/Project Engineer		
		Eric Fu Eric Fu/Reviewer		

通标标准技术服务有限公司深圳分公司
检验检测专用章
Inspection & Testing Services
SGS-CSTC Standards Technical Services Co.,Ltd. Shenzhen Branch Testing Center LEC Laboratory.

Unless otherwise agreed in writing, this document is issued by the Company subject to its General Conditions of Service printed overleaf, available on request or accessible at https://www.sgs.com/en/Terms-and-Conditions. Attention is drawn to the limitation of liability, indemnification and jurisdiction issues defined therein. Any holder of this document is advised that information contained hereon reflects the Company's findings at the time of its intervention only and within the limits of Client's instructions, if any. The Company's sole responsibility is to its Client and this document does not exonerate parties to a transaction from exercising all their rights and obligations under the transaction documents. This document cannot be reproduced except in full, without prior written approval of the Company. Any unauthorized alteration, forgery or falsification of the content or appearance of this document is unlawful and offenders may be prosecuted to the fullest extent of the law. Unless otherwise stated the results shown in this test report refer only to the sample(s) tested and such sample(s) are retained for 30 days only.
Attention: To check the authenticity of testing /inspection report & certificate, please contact us at telephone: (86-755) 8307 1443, or email: CN.Doccheck@sgs.com
No.1 Workshop, M-10, Middle Section, Science & Technology Park, Nanshan District, Shenzhen, Guangdong, China 518057 t (86-755) 26012053 f (86-755) 26710594 www.sgsgroup.com.cn
中国・广东・深圳市南山区科技园中区M-10栋1号厂房 邮编:518057 t (86-755) 26012053 f (86-755) 26710594 sgs.china@sgs.com

2 Test Summary

Item	Standard	Test Case ID	Result
End User Device additional requirement	96.47	/	Pass

The UUT is an End User Device. According to the specifications of the manufacturer, it must comply with the requirements of the following standards:

Test standards:
FCC Part 96.47
FCC KDB 940660 D01 Part 96 CBRS Eqpt v03
WINNF-TS-0122-V1.0.2 CBRS CBSD Test Specification
WINNF-18-IN-00178 CBRS End User Device as UUT Test Guidelines

Unless otherwise agreed in writing, this document is issued by the Company subject to its General Conditions of Service printed overleaf, available on request or accessible at https://www.sgs.com/en/Terms-and-Conditions. Attention is drawn to the limitation of liability, indemnification and jurisdiction issues defined therein. Any holder of this document is advised that information contained hereon reflects the Company's findings at the time of its intervention only and within the limits of Client's instructions, if any. The Company's sole responsibility is to its Client and this document does not exonerate parties to a transaction from exercising all their rights and obligations under the transaction documents. This document cannot be reproduced except in full, without prior written approval of the Company. Any unauthorized alteration, forgery or falsification of the content or appearance of this document is unlawful and offenders may be prosecuted to the fullest extent of the law. Unless otherwise stated the results shown in this test report refer only to the sample(s) tested and such sample(s) are retained for 30 days only.
Attention: To check the authenticity of testing /inspection report & certificate, please contact us at telephone: (86-755) 8307 1443, or email: CN.Doccheck@sgs.com
SGS-CSTC Standards Technical Services Co.,Ltd. Shenzhen Branch Testing Center LEC Laboratory.
No.1 Workshop, M-10, Middle Section, Science & Technology Park, Nanshan District, Shenzhen, Guangdong, China 518057 t (86-755) 26012053 f (86-755) 26710594 www.sgsgroup.com.cn
中国・广东・深圳市南山区科技园中区M-10栋1号厂房 邮编:518057 t (86-755) 26012053 f (86-755) 26710594 sgs.china@sgs.com

3 Contents

Page

1 Cover Page 1

2 Test Summary 3

3 Contents 4

4 General Information 5

4.1 Details of E.U.T. 5
4.2 Measurement Uncertainty 5
4.3 Description of Support Units 5
4.4 Test Location 6
4.5 Test Facility 6

5 Equipment List 7

6 Test Method and Environment 8

6.1 End User Device Conformance and Performance 8
6.2 Test Environment 8
6.3 Test Requirement 8
6.4 Test Procedure 8
6.5 Test Setup 9
6.6 Test Result 10

7 Photographs 12

7.1 EUT Constructional Details (EUT Photos) 12

Unless otherwise agreed in writing, this document is issued by the Company subject to its General Conditions of Service printed overleaf, available on request or accessible at https://www.sgs.com/en/Terms-and-Conditions. Attention is drawn to the limitation of liability, indemnification and jurisdiction issues defined therein. Any holder of this document is advised that information contained hereon reflects the Company's findings at the time of its intervention only and within the limits of Client's instructions, if any. The Company's sole responsibility is to its Client and this document does not exonerate parties to a transaction from exercising all their rights and obligations under the transaction documents. This document cannot be reproduced except in full, without prior written approval of the Company. Any unauthorized alteration, forgery or falsification of the content or appearance of this document is unlawful and offenders may be prosecuted to the fullest extent of the law. Unless otherwise stated the results shown in this test report refer only to the sample(s) tested and such sample(s) are retained for 30 days only.
Attention: To check the authenticity of testing /inspection report & certificate, please contact us at telephone: (86-755) 8307 1443, or email: CN.Doccheck@sgs.com

4 General Information

4.1 Details of E.U.T.

Power supply:	DC 3.91V from internal rechargeable battery which can be charge by AC/DC adapter
Sample Type:	Mobile Phone
CBSD Class:	End User device
Transmitter Frequency Band:	5G NR: n77/78
Transmitter Frequency Range:	3550~3700MHz
Hardware Version:	V1.3
Software Version:	X6851-P865AA-U-OP-231128V432
Antenna Gain:	-1.85dBi (Provided by manufacturer)
Antenna Type:	PIFA

4.2 Measurement Uncertainty

No.	Item	Measurement Uncertainty
1	Radio Frequency	± 7.25 x 10^{-8}
2	RF conducted power	± 0.75dB
3	Temperature test	± 1°C
4	Humidity test	± 3%
5	Supply voltages	± 1.5%
6	Time	± 3%

Remark:
The Ulab (lab Uncertainty) is less than Ucispr/ETSI (CISPR/ETSI Uncertainty), so the test results
– compliance is deemed to occur if no measured disturbance level exceeds the disturbance limit;
– non-compliance is deemed to occur if any measured disturbance level exceeds the disturbance limit.

4.3 Description of Support Units

Description	Manufacturer	Model No.	Serial No.
DP	Lanner Electronics Inc.	LICA-1513A	/
EPC	Lanner Electronics Inc.	LICA-1513A	LR202002004052
Router	TP-LINK	TL-R860+	1175379002425
5G NR Base station	Baicells	BSC7048A243 (FCC ID: 2AG32BSC7048A243)	1202000577233VB0002

Unless otherwise agreed in writing, this document is issued by the Company subject to its General Conditions of Service printed overleaf, available on request or accessible at https://www.sgs.com/en/Terms-and-Conditions. Attention is drawn to the limitation of liability, indemnification and jurisdiction issues defined therein. Any holder of this document is advised that information contained hereon reflects the Company's findings at the time of its intervention only and within the limits of Client's instructions, if any. The Company's sole responsibility is to its Client and this document does not exonerate parties to a transaction from exercising all their rights and obligations under the transaction documents. This document cannot be reproduced except in full, without prior written approval of the Company. Any unauthorized alteration, forgery or falsification of the content or appearance of this document is unlawful and offenders may be prosecuted to the fullest extent of the law. Unless otherwise stated the results shown in this test report refer only to the sample(s) tested and such sample(s) are retained for 30 days only.
Attention: To check the authenticity of testing /inspection report & certificate, please contact us at telephone: (86-755) 8307 1443, or email: CN.Doccheck@sgs.com
SGS-CSTC Standards Technical Services Co.,Ltd. Shenzhen Branch Testing Center LEC Laboratory.
No.1 Workshop, M-10, Middle Section, Science & Technology Park, Nanshan District, Shenzhen, Guangdong, China 518057 t (86-755) 26012053 f (86-755) 26710594 www.sgsgroup.com.cn
中国・广东・深圳市南山区科技园中区M-10栋1号厂房 邮编:518057 t (86-755) 26012053 f (86-755) 26710594 sgs.china@sgs.com

4.4 Test Location

All tests were performed at:

SGS-CSTC Standards Technical Services Co., Ltd., Shenzhen Branch

No. 1 Workshop, M-10, Middle Section, Science & Technology Park, Nanshan District, Shenzhen, Guangdong, China. 518057.

Tel: +86 755 2601 2053 Fax: +86 755 2671 0594

No tests were sub-contracted.

4.5 Test Facility

The test facility is recognized, certified, or accredited by the following organizations:

• A2LA (Certificate No. 3816.01)

SGS-CSTC Standards Technical Services Co., Ltd., Shenzhen EMC Laboratory is accredited by the American Association for Laboratory Accreditation(A2LA). Certificate No. 3816.01.

• VCCI (Member No. 1937)

The 3m Fully-anechoic chamber for above 1GHz, 10m Semi-anechoic chamber for below 1GHz, Shielded Room for Mains Port Conducted Interference Measurement and Telecommunication Port Conducted Interference Measurement of SGS-CSTC Standards Technical Services Co., Ltd. Shenzhen EMC laboratory have been registered in accordance with the Regulations for Voluntary Control Measures with Registration No.: G-20026, R-14188, C-12383 and T-11153 respectively.

• FCC –Designation Number: CN1336

SGS-CSTC Standards Technical Services Co., Ltd., Shenzhen EMC Laboratory has been recognized as an accredited testing laboratory.

Designation Number: CN1336. Test Firm Registration Number: 787754.

• Innovation, Science and Economic Development Canada

SGS-CSTC Standards Technical Services Co., Ltd., Shenzhen EMC Laboratory has been recognized by ISED as an accredited testing laboratory.

CAB identifier: CN0006.

IC#: 4620C.

通标标准技术服务有限公司深圳分公司
检验检测专用章
Inspection & Testing Services
SGS-CSTC Standards Technical Services Co.,Ltd. Shenzhen Branch Testing Center LEC Laboratory.

Unless otherwise agreed in writing, this document is issued by the Company subject to its General Conditions of Service printed overleaf, available on request or accessible at https://www.sgs.com/en/Terms-and-Conditions. Attention is drawn to the limitation of liability, indemnification and jurisdiction issues defined therein. Any holder of this document is advised that information contained hereon reflects the Company's findings at the time of its intervention only and within the limits of Client's instructions, if any. The Company's sole responsibility is to its Client and this document does not exonerate parties to a transaction from exercising all their rights and obligations under the transaction documents. This document cannot be reproduced except in full, without prior written approval of the Company. Any unauthorized alteration, forgery or falsification of the content or appearance of this document is unlawful and offenders may be prosecuted to the fullest extent of the law. Unless otherwise stated the results shown in this test report refer only to the sample(s) tested and such sample(s) are retained for 30 days only.
Attention: To check the authenticity of testing /inspection report & certificate, please contact us at telephone: (86-755) 8307 1443, or email: CN.Doccheck@sgs.com

No.1 Workshop, M-10, Middle Section, Science & Technology Park, Nanshan District, Shenzhen, Guangdong, China 518057 t (86-755) 26012053 f (86-755) 26710594 www.sgsgroup.com.cn
中国・广东・深圳市南山区科技园中区M-10栋1号厂房 邮编:518057 t (86-755) 26012053 f (86-755) 26710594 sgs.china@sgs.com

5 Equipment List

Test Equipment	Manufacturer	Model No.	Inventory No.	Cal Date	Cal Due Date
Laptop (With SAS Test hamess)	Lenovo	T14	/	/	/
Spectrum Analyzer	Keysight	N9020A	SEM004-21	2023-03-20	2024-03-19
Shield Room	SAEMC	MSR433	SEM001-11	2021-03-13	2024-03-12
Coaxial Cable	SGS	N/A	SEM031-01	2023-07-11	2024-07-10
Attenuator	Weinschel Associates	WA41	SEM021-09	N/A	N/A
Splitter	MACOM	2090-6214-00	N/A	N/A	N/A
Humidity/ Temperature Indicator	deli	8838	SEM002-32	2023-07-28	2024-07-27

Unless otherwise agreed in writing, this document is issued by the Company subject to its General Conditions of Service printed overleaf, available on request or accessible at https://www.sgs.com/en/Terms-and-Conditions. Attention is drawn to the limitation of liability, indemnification and jurisdiction issues defined therein. Any holder of this document is advised that information contained hereon reflects the Company's findings at the time of its intervention only and within the limits of Client's instructions, if any. The Company's sole responsibility is to its Client and this document does not exonerate parties to a transaction from exercising all their rights and obligations under the transaction documents. This document cannot be reproduced except in full, without prior written approval of the Company. Any unauthorized alteration, forgery or falsification of the content or appearance of this document is unlawful and offenders may be prosecuted to the fullest extent of the law. Unless otherwise stated the results shown in this test report refer only to the sample(s) tested and such sample(s) are retained for 30 days only.
Attention: To check the authenticity of testing /inspection report & certificate, please contact us at telephone: (86-755) 8307 1443, or email: CN.Doccheck@sgs.com
SGS-CSTC Standards Technical Services Co.,Ltd. Shenzhen Branch Certified EEC Laboratory.
No.1 Workshop, M-10, Middle Section, Science & Technology Park, Nanshan District, Shenzhen, Guangdong, China 518057 t (86-755) 26012053 f (86-755) 26710594 www.sgsgroup.com.cn
中国・广东・深圳市南山区科技园中区M-10栋1号厂房 邮编:518057 t (86-755) 26012053 f (86-755) 26710594 sgs.china@sgs.com
Member of the SGS Group (SGS SA)

6 Test Method and Environment

6.1 End User Device Conformance and Performance

Test Requirement: FCC Part 96.47

Test Method: WINNF-18-IN-00178 CBRS End User Device as UUT Test Guidelines

6.2 Test Environment

Environmental Conditions: 25deg. C, 65%RH

6.3 Test Requirement

FCC Part 96.47

a). End User Devices may operate only if they can positively receive and decode an authorization signal transmitted by a CBSD, including the frequencies and power limits for their operation.

b). An End User Device must discontinue operations, change frequencies, or change its operational power level within 10 seconds of receiving instructions from its associated CBSD.

6.4 Test Procedure

For NR:

Following procedure can be done by applying WINNF-TS-0122-V1.0.2 CBRS CBSD Test Specification, use the certified Base station CBSD (FCC ID: 2AG32BSC7048A243) as companion device to show compliance with Part 96.47 requirement for End User Device (EUD):

1. Setup with frequency 3590-3610MHz and power level 18dBm/MHz;
2. Enable CBSD service ;
3. Check EUD Tx Frequency and power;
4. Disable CBSD service ;
5. Check EUD stops transmission within 10seconds;

6. Setup with frequency 3610-3630MHz and power level 5dBm/MHz;
7. Enable CBSD service;
8. Check EUD Tx Frequency and power;
9. Disable CBSD service;
10. Check EUD stops transmission within 10seconds.

通标标准技术服务有限公司深圳分公司 检验检测专用章 Inspection & Testing Services SGS-CSTC Standards Technical Services Co., Ltd. Shenzhen Branch
SGS-CSTC Standards Technical Services Co.,Ltd. Shenzhen Branch Testing Center LEC Laboratory.

Unless otherwise agreed in writing, this document is issued by the Company subject to its General Conditions of Service printed overleaf, available on request or accessible at https://www.sgs.com/en/Terms-and-Conditions. Attention is drawn to the limitation of liability, indemnification and jurisdiction issues defined therein. Any holder of this document is advised that information contained hereon reflects the Company's findings at the time of its intervention only and within the limits of Client's instructions, if any. The Company's sole responsibility is to its Client and this document does not exonerate parties to a transaction from exercising all their rights and obligations under the transaction documents. This document cannot be reproduced except in full, without prior written approval of the Company. Any unauthorized alteration, forgery or falsification of the content or appearance of this document is unlawful and offenders may be prosecuted to the fullest extent of the law. Unless otherwise stated the results shown in this test report refer only to the sample(s) tested and such sample(s) are retained for 30 days only.
Attention: To check the authenticity of testing /inspection report & certificate, please contact us at telephone: (86-755) 8307 1443, or email: CN.Doccheck@sgs.com
No.1 Workshop, M-10, Middle Section, Science & Technology Park, Nanshan District, Shenzhen, Guangdong, China 518057 t (86-755) 26012053 f (86-755) 26710594 www.sgsgroup.com.cn
中国・广东・深圳市南山区科技园中区M-10栋1号厂房 邮编:518057 t (86-755) 26012053 f (86-755) 26710594 sgs.china@sgs.com

6.5 Test Setup

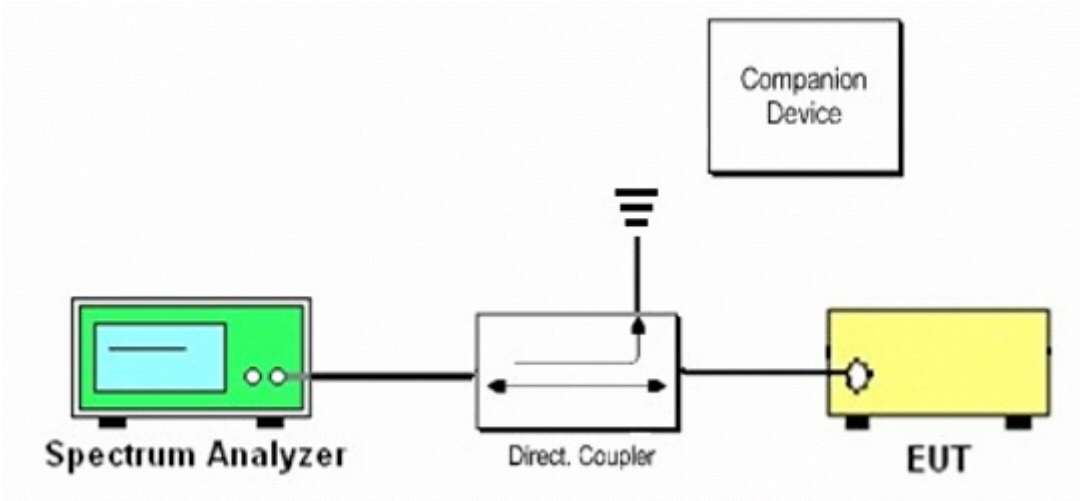

End User Device as UUT, the companion device is certified CBSD

Unless otherwise agreed in writing, this document is issued by the Company subject to its General Conditions of Service printed overleaf, available on request or accessible at https://www.sgs.com/en/Terms-and-Conditions. Attention is drawn to the limitation of liability, indemnification and jurisdiction issues defined therein. Any holder of this document is advised that information contained hereon reflects the Company's findings at the time of its intervention only and within the limits of Client's instructions, if any. The Company's sole responsibility is to its Client and this document does not exonerate parties to a transaction from exercising all their rights and obligations under the transaction documents. This document cannot be reproduced except in full, without prior written approval of the Company. Any unauthorized alteration, forgery or falsification of the content or appearance of this document is unlawful and offenders may be prosecuted to the fullest extent of the law. Unless otherwise stated the results shown in this test report refer only to the sample(s) tested and such sample(s) are retained for 30 days only.
Attention: To check the authenticity of testing /inspection report & certificate, please contact us at telephone: (86-755) 8307 1443, or email: CN.Doccheck@sgs.com
SGS-CSTC Standards Technical Services Co.,Ltd. Shenzhen Branch Testing Center LEC Laboratory.
No.1 Workshop, M-10, Middle Section, Science & Technology Park, Nanshan District, Shenzhen, Guangdong, China 518057 t (86-755) 26012053 f (86-755) 26710594 www.sgsgroup.com.cn
中国・广东・深圳市南山区科技园中区M-10栋1号厂房 邮编:518057 t (86-755) 26012053 f (86-755) 26710594 sgs.china@sgs.com

6.6 Test Result

NR
[Step 1] Setup with frequency 3590-3610MHz and power level 18dBm/MHz
[Step 3] Check EUD Tx Frequency and power
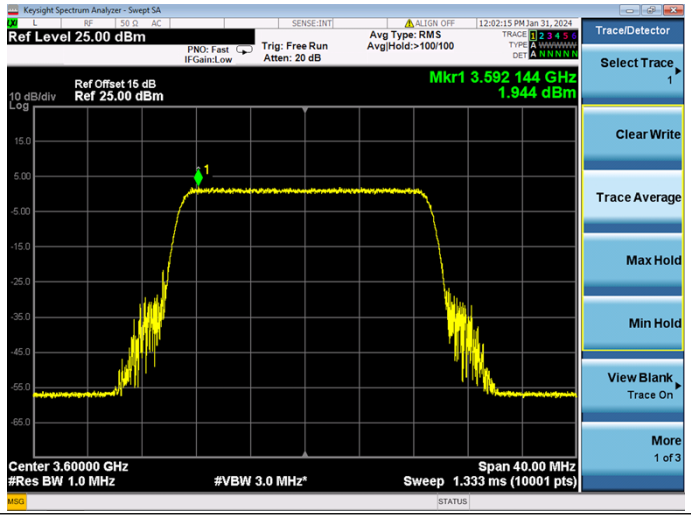
EIRP PSD=1.944-1.85+5.0=5.094dBm/MHz, loss of Cable and Splitter is 5.0dB, Antenna gain is -1.85dBi
[Step 5] EUD stops transmission within 10 seconds of receiving instructions from its associated CBSD.
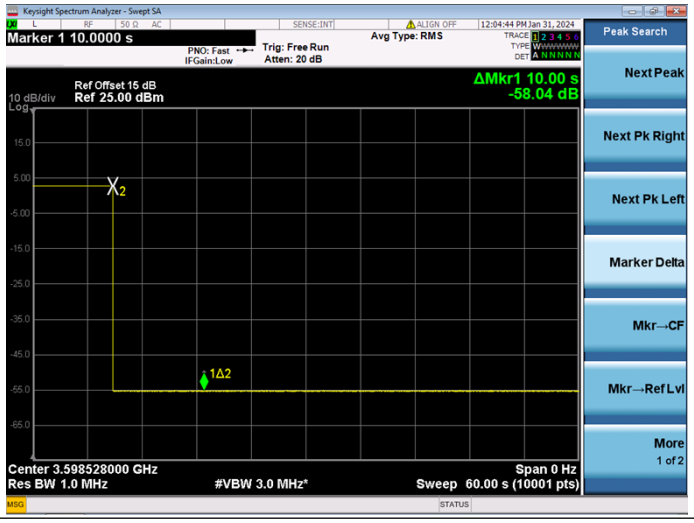

Unless otherwise agreed in writing, this document is issued by the Company subject to its General Conditions of Service printed overleaf, available on request or accessible at https://www.sgs.com/en/Terms-and-Conditions. Attention is drawn to the limitation of liability, indemnification and jurisdiction issues defined therein. Any holder of this document is advised that information contained hereon reflects the Company's findings at the time of its intervention only and within the limits of Client's instructions, if any. The Company's sole responsibility is to its Client and this document does not exonerate parties to a transaction from exercising all their rights and obligations under the transaction documents. This document cannot be reproduced except in full, without prior written approval of the Company. Any unauthorized alteration, forgery or falsification of the content or appearance of this document is unlawful and offenders may be prosecuted to the fullest extent of the law. Unless otherwise stated the results shown in this test report refer only to the sample(s) tested and such sample(s) are retained for 30 days only.
Attention: To check the authenticity of testing /inspection report & certificate, please contact us at telephone: (86-755) 8307 1443, or email: CN.Doccheck@sgs.com
SGS-CSTC Standards Technical Services Co.,Ltd. Shenzhen Branch Testing Center LEC Laboratory.
No.1 Workshop, M-10, Middle Section, Science & Technology Park, Nanshan District, Shenzhen, Guangdong, China 518057 t (86-755) 26012053 f (86-755) 26710594 www.sgsgroup.com.cn
中国・广东・深圳市南山区科技园中区M-10栋1号厂房 邮编:518057 t (86-755) 26012053 f (86-755) 26710594 sgs.china@sgs.com

[Step 6] Setup with frequency 3630-3650MHz and power level 5dBm/MHz
[Step 8] Check EUD Tx Frequency and power
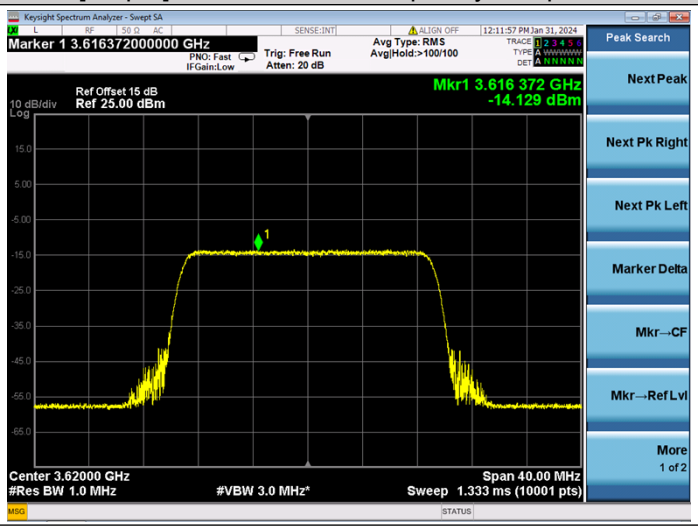
EIRP PSD=-14.129-1.85+5.0=-10.979dBm/MHz, loss of Cable and Splitter is 5.0dB, Antenna gain is -1.85dBi
[Step 10] EUD stops transmission within 10 seconds of receiving instructions from its associated CBSD.
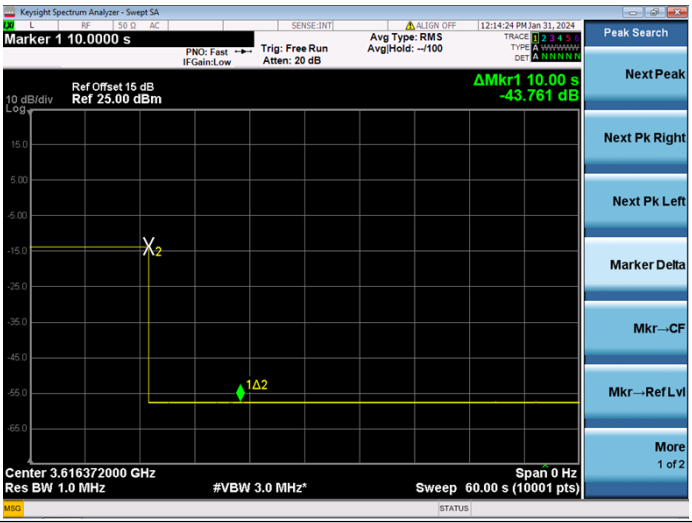

Unless otherwise agreed in writing, this document is issued by the Company subject to its General Conditions of Service printed overleaf, available on request or accessible at https://www.sgs.com/en/Terms-and-Conditions. Attention is drawn to the limitation of liability, indemnification and jurisdiction issues defined therein. Any holder of this document is advised that information contained hereon reflects the Company's findings at the time of its intervention only and within the limits of Client's instructions, if any. The Company's sole responsibility is to its Client and this document does not exonerate parties to a transaction from exercising all their rights and obligations under the transaction documents. This document cannot be reproduced except in full, without prior written approval of the Company. Any unauthorized alteration, forgery or falsification of the content or appearance of this document is unlawful and offenders may be prosecuted to the fullest extent of the law. Unless otherwise stated the results shown in this test report refer only to the sample(s) tested and such sample(s) are retained for 30 days only.
Attention: To check the authenticity of testing /inspection report & certificate, please contact us at telephone: (86-755) 8307 1443, or email: CN.Doccheck@sgs.com

SGS-CSTC Standards Technical Services Co.,Ltd. Shenzhen Branch Testing Center LEC Laboratory.
No.1 Workshop, M-10, Middle Section, Science & Technology Park, Nanshan District, Shenzhen, Guangdong, China 518057 t (86-755) 26012053 f (86-755) 26710594 www.sgsgroup.com.cn
中国・广东・深圳市南山区科技园中区M-10栋1号厂房 邮编:518057 t (86-755) 26012053 f (86-755) 26710594 sgs.china@sgs.com

7 Photographs

7.1 EUT Constructional Details (EUT Photos)

Please Refer to external and internal photos for details.

- End of the Report -

Unless otherwise agreed in writing, this document is issued by the Company subject to its General Conditions of Service printed overleaf, available on request or accessible at https://www.sgs.com/en/Terms-and-Conditions. Attention is drawn to the limitation of liability, indemnification and jurisdiction issues defined therein. Any holder of this document is advised that information contained hereon reflects the Company's findings at the time of its intervention only and within the limits of Client's instructions, if any. The Company's sole responsibility is to its Client and this document does not exonerate parties to a transaction from exercising all their rights and obligations under the transaction documents. This document cannot be reproduced except in full, without prior written approval of the Company. Any unauthorized alteration, forgery or falsification of the content or appearance of this document is unlawful and offenders may be prosecuted to the fullest extent of the law. Unless otherwise stated the results shown in this test report refer only to the sample(s) tested and such sample(s) are retained for 30 days only.
Attention: To check the authenticity of testing /inspection report & certificate, please contact us at telephone: (86-755) 8307 1443, or email: CN.Doccheck@sgs.com

SGS-CSTC Standards Technical Services Co.,Ltd. Shenzhen Branch Testing Center LEC Laboratory.
No.1 Workshop, M-10, Middle Section, Science & Technology Park, Nanshan District, Shenzhen, Guangdong, China 518057 t (86-755) 26012053 f (86-755) 26710594 www.sgsgroup.com.cn
中国・广东・深圳市南山区科技园中区M-10栋1号厂房 邮编:518057 t (86-755) 26012053 f (86-755) 26710594 sgs.china@sgs.com