TEST REPORT

FCC ID: 2AIZN-X6856

Product: Mobile Phone

Model No.: X6856

Trade Mark: Infinix

Report No.: WSCT-ANAB-R&E241200075A-Part96

Issued Date: 06 January 2025

Issued for:

INFINIX MOBILITY LIMITED
FLAT N 16/F BLOCK B UNIVERSAL INDUSTRIAL CENTRE 19-25 SHAN MEI STREET FOTAN NT HONGKONG

Issued By:

World Standardization Certification & Testing Group (Shenzhen) Co., Ltd.

Building A-B,Baoli'an Industrial Park,No.58 and 60,Tangtou Avenue, Shiyan Street, Bao'an District, Shenzhen City, Guangdong Province, China

TEL: +86-755-26996192

FAX: +86-755-86376605

Note: *This report shall not be reproduced except in full, without the written approval of World Standardization Certification& Testing Group (Shenzhen) Co., Ltd. This document may be altered or revised by World Standardization Certification& Testing Group (Shenzhen) Co., Ltd. personnel only, and shall be noted in the revision section of the document. The test results in the report only apply to the tested sample.*

TABLE OF CONTENTS

1. GENERAL INFORMATION 3
2. GENERAL DESCRIPTION OF EUT 4
3. FACILITIES AND ACCREDITATIONS 5
3.1. FACILITIES 5
3.2. ACCREDITATIONS 5
3.3. EUT SYSTEM CONFIGURATION 6
3.4. DESCRIPTION OF TEST CHANNELS AND TEST MODES 7
3.5. EQUIPMENT MODIFICATIONS 8
4. SUMMARY OF TEST REQUIREMENTS AND RESULTS 9
5. MEASUREMENT INSTRUMENTS 10
6. Transmitter Radiated Power (EIRP/ERP) 11
7. Peak to Average Ratio 14
7.2. TEST RESULT 16
8. SPURIOUS EMISSION (Conducted and Radiated) 17
8.1. MEASUREMENT RESULT (PRE-MEASUREMENT) 17
9. OCCUPIED BANDWIDTH& EMISSION BANDWIDTH 28
9.1. MEASUREMENT RESULT 30
10. BAND EDGE 31
10.1. MEASUREMENT RESULT 32
11. SPURIOUS EMISSION (Conducted and Radiated) 33
11.1. MEASUREMENT RESULT 34
12. FREQUENCY STABILITY 35
12.1. MEASUREMENT RESULT (WORST) 36
13. Test Setup Photographs 37

1. GENERAL INFORMATION

Product:	Mobile Phone
Model No.:	X6856
Additional Model:	Infinix
Applicant:	**INFINIX MOBILITY LIMITED** FLAT N 16/F BLOCK B UNIVERSAL INDUSTRIAL CENTRE 19-25 SHAN MEI STREET FOTAN NT HONGKONG
Manufacturer:	**INFINIX MOBILITY LIMITED** FLAT N 16/F BLOCK B UNIVERSAL INDUSTRIAL CENTRE 19-25 SHAN MEI STREET FOTAN NT HONGKONG
Date of Test:	11 November 2024 to 06 January 2025
Applicable Standards:	FCC CFR Title 47 Part 96 ANSI C63.26-2015

The above equipment has been tested by World Standardization Certification& Testing Group (Shenzhen) Co., Ltd. And found compliance with the requirements set forth in the technical standards mentioned above. The results of testing in this report apply only to the product, which was tested. Other similar equipment will not necessarily produce the same results due to production tolerance and measurement uncertainties.

Tested By: Wang Xiang ***(Wang Xiang)***

Checked By: Chen Xu ***(Chen Xu)***

Approved By: Li Huaibi ***(Li Huaibi)***

Date: 07 January 2025

2. GENERAL DESCRIPTION OF EUT

Equipment Type:	Mobile Phone
Model	X6856
Trade Mark	Infinix
Operating Bands	TDD 5G NR Band 77/78
Antenna Type:	Integral Antenna
Antenna gain:	5G NR 77/78: -2.56dBi
Radiated Power (EIRP/ERP) Limit	5G NR 77/78: 1.00W(30.00dBm)
Operation Frequency Range:	NR Band77:3550-3700 MHz(TX), 3700-3980 MHz(RX); NR Band78:3550-3700 MHz(TX), 3700-3800 MHz(RX);
Modulation Type	NR: BPSK/ QPSK/16QAM/64QAM/256QAM
Operating Voltage:	Adapter: U900XSA Input: 100-240V~50/60Hz 0.6A Output: 5.0V⎓2.4A or 7.5V⎓2.4A 18.0W MAX Rechargeable Li-ion Polymer Battery Model: BL-5ABX Rated Voltage: 3.86V Rated Capacity: 4900mAh/18.97Wh Typical Capacity: 5000mAh/19.35Wh Limited Charge Voltage: 4.45V
Max power:	See Table 2.1
Remark:	N/A.

Note：
1. The EUT is a Mobile Phone, supporting dual SIM card slots under the same transceiver. Both SIM card slots support NR and both SIM card slots share the same transceiver, so only SIM1 is tested in this report.
2. The antenna gain provided by the applicant, and the laboratory will not be responsible for the accumulated calculation results which covers the information provided by the applicant.
3. N/A stands for no applicable.
4. Antenna gain provided by the customer.

3. FACILITIES AND ACCREDITATIONS

3.1. Facilities

All measurement facilities used to collect the measurement data are located at **Building A-B,Baoli'an Industrial Park,No.58 and 60,Tangtou Avenue, Shiyan Street, Bao'an District, Shenzhen City, Guangdong Province, China of the World Standardization Certification & Testing Group (Shenzhen) Co., Ltd.**

The sites are constructed in conformance with the requirements of ANSI C63.4 and CISPR Publication 22. All receiving equipment conforms to CISPR Publication 16-1, "Radio Interference Measuring Apparatus and Measurement Methods."

3.2. ACCREDITATIONS

ANAB - Certificate Number: AT-3951

The EMC Laboratory has been accredited by the American Association for Laboratory Accreditation (ANAB).Certification Number: AT-3951

3.3. EUT System Configuration

The EUT configuration for testing is installed on RF field strength measurement to meet the Commission's requirement and operating in a manner which intends to maximize its emission characteristics in a continuous normal application.

Fig. 3.2-1 Configuration of EUT System

(EUT: Mobile Phone)

Table 3.2-1 Equipment Used in EUT System

Item	Equipment	Model No.	ID or Specification	Note
1	Adapter	U900XSA		Accessories

***Note: All the accessories have been used during the test. The following "EUT" in setup diagram means EUT system.

3.4. Description Of Test Channels And Test Modes

Test channels:

NR n77(3550-3700Mhz)			
Test Channel	BW(MHz)	UL Channel	Frequency(MHz)
Low Range	10	637000	3560
	50	638334	3575
	100	640000	3600
Mid Range	10/50/100	641666	3625
High Range	10	646332	3695
	50	645000	3675
	100	643332	3650

NR n78(3550-3700Mhz)			
Test Channel	BW(MHz)	UL Channel	Frequency(MHz)
Low Range	10	637000	3560
	50	638334	3575
	100	640000	3600
Mid Range	10/50/100	641666	3625
High Range	10	646332	3695
	50	645000	3675
	100	643332	3650

Note 1: BPSK&QPSK&16QAM&QAM64&QAM256 modulation has been measured;
Note 2: The worst condition was recorded in the test report if no other modes test data.

3.5. Equipment Modifications

Not available for this EUT intended for grant.

4. SUMMARY OF TEST REQUIREMENTS AND RESULTS

No.	Description	FCC Part No.	Test Verdict	Remark
1	Conducted RF Output Power	2.1046	Pass	--
2	Effective (Isotropic) Radiated Power	2.1046 22.913(a) 24.232(c) 27.50 90.635(b) 90.542(a) §90.1321(a)	Pass	--
3	Peak to Average Radio	2.1046 22.913(d) 24.232(d) 27.50(d)	Pass	--
4	Occupied Bandwidth	2.1049 22.917(b) 24.238(b) 27.53 90.209	Pass	--
5	Frequency Stability	2.1055 22.355 24.235 27.54 90.213	Pass	--
6	Spurious Emission at Antenna Terminals	2.1051 22.917 24.238 27.53 90.691 90.543	Pass	--
7	Band Edge	2.1051 22.917 24.238 27.53 90.691 90.543	Pass	--
8	Field Strength of Spurious Radiation	2.1053 22.917 24.238 27.53 90.691 90.543	Pass	--

5. MEASUREMENT INSTRUMENTS

NAME OF EQUIPMENT	MANUFACTURER	MODEL	SERIAL NUMBER	Calibration Date	Calibration Due.
EMI Test Receiver	R&S	ESCI	100005	11/05/2024	11/04/2025
LISN	AFJ	LS16	16010222119	11/05/2024	11/04/2025
LISN(EUT)	Mestec	AN3016	04/10040	11/05/2024	11/04/2025
Universal Radio Communication Tester	R&S	CMU 200	1100.0008.02	11/05/2024	11/04/2025
Coaxial cable	Megalon	LMR400	N/A	11/05/2024	11/04/2025
GPIB cable	Megalon	GPIB	N/A	11/05/2024	11/04/2025
Spectrum Analyzer	R&S	FSU	100114	11/05/2024	11/04/2025
Pre Amplifier	H.P.	HP8447E	2945A02715	11/05/2024	11/04/2025
Pre-Amplifier	CDSI	PAP-1G18-38	--	11/05/2024	11/04/2025
Loop Antenna	R&S	HFH2-Z2	100296	11/05/2024	11/04/2025
Bi-log Antenna	SCHWARZBECK	VULB9168	01488	7/29/2024	7/28/2025
9*6*6 Anechoic	--	--	--	11/05/2024	11/04/2025
Horn Antenna	COMPLIANCE ENGINEERING	CE18000	--	11/05/2024	11/04/2025
Horn Antenna	SCHWARZBECK	BBHA9120D	9120D-631	11/05/2024	11/04/2025
Power meter	Anritsu	ML2487A	6K00003613	11/05/2024	11/04/2025
Power meter	Anritsu	MA2491A	32263	11/05/2024	11/04/2025
Cable	TIME MICROWAVE	LMR-400	N-TYPE04	11/05/2024	11/04/2025
System-Controller	CCS	N/A	N/A	N.C.R	N.C.R
Turn Table	CCS	N/A	N/A	N.C.R	N.C.R
Antenna Tower	CCS	N/A	N/A	N.C.R	N.C.R
RF cable	Murata	MXHQ87WA3000	-	11/05/2024	11/04/2025
Loop Antenna	EMCO	6502	00042960	11/05/2024	11/04/2025
Wideband Radio Communication Tester	R&S	CMW 500	103974	11/05/2024	11/04/2025
Horn Antenna	SCHWARZBECK	BBHA 9170	1123	11/05/2024	11/04/2025
H & T Chamber	Guangzhou gongwen	GDJS-500-40	0329	11/05/2024	11/04/2025
UXM 5G Wireless Test Platform	KEYSIGHT	E7515B	MY60192341	11/05/2024	11/04/2025
Anechoic chamber	SAEMC	966	-	11/05/2024	11/04/2025
Spectrum Analyzer	KEYSIGHT	N9010B	MY60241089	11/05/2024	11/04/2025

6. Transmitter Radiated Power (EIRP/ERP)

Test limit:

FCC § 2.1046 & 22.913(a) & 24.232(c) & 27.50(a) & 27.50(b) & 27.50(c) & 27.50(d) & 27.50(h) & 27.50(j) & 27.50(k) & 90.635(b) & 90.542(a)

According to FCC section 22.913(a) (5), the Effective Radiated Power (ERP) of mobile transmitters and auxiliary test transmitters must not exceed 7 watts.

According to FCC section 24.232(c), mobile and portable stations are limited to 2 watts EIRP and the equipment must employ a means for limiting power to the minimum necessary for successful communications.

According to FCC section 27.50(a) (3), for mobile and portable stations transmitting in the 2305-2315MHz band or the 2350-2360MHz band, the average EIRP must not exceed 50 mill watts within any 1 megahertz of authorized bandwidth, except that for mobile and portable stations compliant with 3GPP LTE standards. For mobile and portable stations using time division depleting (TDD) technology, the duty cycle must not exceed 38 percent in the 2305-2315 MHz and 2350-2360 MHz bands.

FCC section 27.50(b) (10), portable stations (hand-held devices) transmitting in the 746-757MHz, 776-788MHz, and 805-806MHz bands are limited to 3 watts ERP.

FCC section 27.50(c) (10), portable stations (hand-held devices) in the 600MHz uplink band and the 698-746MHz band, and fixed and mobile stations in the 600MHz uplink band are limited to 3 watts ERP.

FCC section 27.50(d) (4), fixed, mobile, and portable (hand-held) stations operating in the 1710-1755 MHz band and mobile and portable stations operating in the 1695-1710 MHz and 1755-1780 MHz bands are limited to 1 watt EIRP. Fixed stations operating in the 1710-1755 MHz band are limited to a maximum antenna height of 10 meters above ground. Mobile and portable stations operating in these bands must employ a means for limiting power to the minimum necessary for successful communications.

(7) Fixed, mobile, and portable (hand-held) stations operating in the 2000-2020 MHz band are limited to 2 watts EIRP.

And FCC section 27.50(h) (2), for mobile and other user stations, mobile stations are limited to 2.0 watts EIRP. All user stations are limited to 2.0 watts transmitter output power.

FCC section 27.50(j) (3), for mobile, and portable (hand-held) stations operating in the 3700-3980 MHz band are limited to 1 watt EIRP.

FCC section 27.50(k) (3), Mobile devices are limited to 1Watt (30 dBm) EIRP in the 3450-3550 MHz band.

Test procedure:

Description of the Conducted Output Power Measurement

The EUT is coupled to the SS with attenuator through power splitter; the RF load attached to EUT antenna terminal is 50Ohm; the path loss as the factor is calibrated to correct the reading. A system simulator is used to establish communication with the EUT, and its parameters are set to force the EUT transmitting at maximum output power. The measured power in the radio frequency on the transmitter output terminals shall be reported.

The relevant equation for determining the conducted measured value is:

Conducted Output Power Value (dBm) = Measured Value (dBm) + Path Loss (dB)

where:
Conducted Output Power Value = final conducted measured value in the conducted power test, in dBm;
Measured Value = measured conducted power received by spectrum analyzer or power meter, in dBm;
Path Loss = signal attenuation in the connecting cable between the transmitter and spectrum analyzer or power meter, including external cable loss, in dB;

During the test, the data of Path Loss (dB) is added in the spectrum analyzer or power meter, so Measured Value (dBm) is the final values which contains the data of Path Loss (dB).

Description of the Transmitter Radiated Power Measurement
In many cases, the RF output power limits for licensed digital transmission devices is specified in terms of effective radiated power (ERP) or equivalent isotropic radiated power (EIRP). Typically, ERP is specified when the operating frequency is less than or equal to 1 GHz and EIRP is specified when the operating frequency is greater than 1 GHz. Both are determined by adding the transmit antenna gain to the conducted RF output power with the primary difference between the two being that when determining the ERP, the transmit antenna gain is referenced to a dipole antenna (i.e., dBd) whereas when determining the EIRP, the transmit antenna gain is referenced to an isotropic antenna (dBi).

Final measurement calculation as below
The relevant equation for determining the ERP or EIRP from the conducted RF output power measured using the guidance provided above is:

$$ERP/EIRP = P_{Meas} + GT - LC$$

where:
ERP/EIRP = effective or equivalent radiated power, respectively (expressed in the same units as PMeas, typically dBW or dBm);
PMeas = measured transmitter output power or PSD, in dBm or dBW;
GT = gain of the transmitting antenna, in dBd (ERP) or dBi (EIRP);
dBd (ERP)=dBi (EIRP) -2.15 dB
LC = signal attenuation in the connecting cable between the transmitter and antenna, in dB.

For devices utilizing multiple antennas, KDB 662911 provides guidance for determining the effective array transmit antenna gain term to be used in the above equation.

The relevant equation for determining the ERP/EIRP from the radiated RF output power is:
ERP/EIRP (dBm) = SA Read Value (dBm) + Correction Factor (dB)

where:
ERP/EIRP = effective or equivalent radiated power, in dBm;
SA Read Value = measured transmitter power received by EMI receiver or spectrum analyzer, in dBm;
Correction Factor = total correction factor including cable loss, in dB;

During the test, the data of Correction Factor (dB) is added in the EMI receiver or spectrum analyzer, so SA Read Value (dBm) is the final values which contains the data of Correction Factor (dB).

Test Result

Note 1: For the HSDPA and HSUPA mode, all subtests were tested and just the worst data we rerecorded in this table.

Note 2: ERP/EIRP = PMeas + GT − LC
ERP/EIRP = effective or equivalent radiated power, respectively (expressed in the same units as PMeas, typically dBW or dBm);
PMeas = measured transmitter output power or PSD, in dBm or dBW;
GT = gain of the transmitting antenna, in dBd (ERP) or dBi (EIRP);
LC = signal attenuation in the connecting cable between the transmitter and antenna, in dB.
ERP = EIRP – 2.15; where ERP and EIRP are expressed in consistent units.

Operation Band (s)	Power Class	Modulation Type	Maximum conducted output power (dBm)	ERP/EIRP (dBm)
NR n77 (3550-3700 Mhz)	Class 3	BPSK	25.91	22.99
	Class 3	QPSK	25.99	22.98
	Class 3	16QAM	25.59	22.67
	Class 3	64QAM	24.17	21.25
	Class 3	256QAM	21.92	19.00
NR n78 (3550-7000 Mhz)	Class 3	BPSK	25.85	22.93
	Class 3	QPSK	25.77	22.85
	Class 3	16QAM	25.4	22.48
	Class 3	64QAM	24.04	21.12
	Class 3	256QAM	22.14	19.22

Note: Please refer to Annex（NR Chapter 1 Transmitter Radiated Power*） for more test data*

7. Peak to Average Ratio

7.1.1. Limit

FCC § 2.1046 & 24.232(d) & 27.50(d) & 27.50(j) & 27.50(k)

In addition, when the transmitter power is measured in terms of average value, the peak-to-average power ratio (PAPR) of the transmitter shall not exceed 13 dB for more than 0.1% of the time using a signal corresponding to the highest PAPR during periods of continuous transmission.

According to FCC section 24.232(d), power measurements for transmissions by stations authorized under this section may be made either in accordance with a Commission-approved average power technique or in compliance with 24.232 (e) of this section. In both instances, equipment employed must be authorized in accordance with the provisions of § 24.51. In measuring transmissions in this band using an average power technique, the peak-to-average ratio (PAR) of the transmission may not exceed 13 dB.

FCC section 24.232(e), peak transmit power must be measured over any interval of continuous transmission using instrumentation calibrated in terms of an rms equivalent voltage. The measurement results shall be properly adjusted for any instrument limitations, such as detector response times, limited resolution bandwidth capability when compared to the emission bandwidth, sensitivity, etc., so as to obtain a true peak measurement for the emission in question over the full bandwidth of the channel.

According to FCC section 27.50(d) (5) & 27.50(j) & 27.50(k), in measuring transmissions in this band using an average power technique, the peak-to-average ratio (PAR) of the transmission may not exceed 13dB.

7.1.2. Test Procedure

Here the lowest, middle and highest channels are selected to perform testing to verify the peak-to-average ratio.

According to KDB 971168 D01, there is CCDF procedure for PAPR:
a) Refer to instrument's analyzer instruction manual for details on how to use the power statistics/CCDF function;

b) Set resolution/measurement bandwidth ⩾ signal's occupied bandwidth;
c) Set the number of counts to a value that stabilizes the measured CCDF curve;
d) Set the measurement interval as follows:
1) for continuous transmissions, set to 1 ms,

2) for burst transmissions, employ an external trigger that is synchronized with the EUT burst timing sequence, or use the internal burst trigger with a trigger level that allows the burst to stabilize and set the measurement interval to a time that is less than or equal to the burst duration.

e) Record the maximum PAPR level associated with a probability of 0.1%.

7.2. Test Result

Note: Please refer to Annex（NR Chapter 2 Peak-to-Average Ratio） for more test data

8. SPURIOUS EMISSION (Conducted and Radiated)

8.1. Measurement Result (Pre-measurement)

NR n77(3550-3700Mhz):

Bandwidth	UL Channel	Frequency	Modulation	RB Size	RB Offset	Judgment
10	637000	3560	BPSK	50	LOW	Pass
10	637000	3560	QPSK	50	LOW	Pass
10	637000	3560	16QAM	50	LOW	Pass
10	637000	3560	64QAM	50	LOW	Pass
10	637000	3560	256QAM	50	LOW	Pass
10	641666	3625	BPSK	50	LOW	Pass
10	641666	3625	QPSK	50	LOW	Pass
10	641666	3625	16QAM	50	LOW	Pass
10	641666	3625	64QAM	50	LOW	Pass
10	641666	3625	256QAM	50	LOW	Pass
10	665000	3975	BPSK	50	LOW	Pass
10	665000	3975	QPSK	50	LOW	Pass
10	665000	3975	16QAM	50	LOW	Pass
10	665000	3975	64QAM	50	LOW	Pass
10	665000	3975	256QAM	50	LOW	Pass
50	638334	3575	BPSK	75	LOW	Pass
50	638334	3575	QPSK	75	LOW	Pass
50	638334	3575	16QAM	75	LOW	Pass
50	638334	3575	64QAM	75	LOW	Pass
50	638334	3575	256QAM	75	LOW	Pass
50	641666	3625	BPSK	75	LOW	Pass
50	641666	3625	QPSK	75	LOW	Pass
50	641666	3625	16QAM	75	LOW	Pass
50	641666	3625	64QAM	75	LOW	Pass
50	641666	3625	256QAM	75	LOW	Pass
50	645000	3675	BPSK	75	LOW	Pass
50	645000	3675	QPSK	75	LOW	Pass
50	645000	3675	16QAM	75	LOW	Pass
50	645000	3675	64QAM	75	LOW	Pass
50	645000	3675	256QAM	75	LOW	Pass
100	640000	3600	BPSK	100	LOW	Pass
100	640000	3600	QPSK	100	LOW	Pass
100	640000	3600	16QAM	100	LOW	Pass
100	640000	3600	64QAM	100	LOW	Pass
100	640000	3600	256QAM	100	LOW	Pass
100	641666	3625	BPSK	100	LOW	Pass
100	641666	3625	QPSK	100	LOW	Pass
100	641666	3625	16QAM	100	LOW	Pass
100	641666	3625	64QAM	100	LOW	Pass
100	641666	3625	256QAM	100	LOW	Pass
100	643332	3650	BPSK	100	LOW	Pass
100	643332	3650	QPSK	100	LOW	Pass
100	643332	3650	16QAM	100	LOW	Pass
100	643332	3650	64QAM	100	LOW	Pass
100	643332	3650	256QAM	100	LOW	Pass

NR n78(3550-3700Mhz):

Bandwidth	UL Channel	Frequency	Modulation	RB Size	RB Offset	Judgment
10	637000	3560	BPSK	50	LOW	Pass
10	637000	3560	QPSK	50	LOW	Pass
10	637000	3560	16QAM	50	LOW	Pass
10	637000	3560	64QAM	50	LOW	Pass
10	637000	3560	256QAM	50	LOW	Pass
10	641666	3625	BPSK	50	LOW	Pass
10	641666	3625	QPSK	50	LOW	Pass
10	641666	3625	16QAM	50	LOW	Pass
10	641666	3625	64QAM	50	LOW	Pass
10	641666	3625	256QAM	50	LOW	Pass
10	665000	3975	BPSK	50	LOW	Pass
10	665000	3975	QPSK	50	LOW	Pass
10	665000	3975	16QAM	50	LOW	Pass
10	665000	3975	64QAM	50	LOW	Pass
10	665000	3975	256QAM	50	LOW	Pass
50	638334	3575	BPSK	75	LOW	Pass
50	638334	3575	QPSK	75	LOW	Pass
50	638334	3575	16QAM	75	LOW	Pass
50	638334	3575	64QAM	75	LOW	Pass
50	638334	3575	256QAM	75	LOW	Pass
50	641666	3625	BPSK	75	LOW	Pass
50	641666	3625	QPSK	75	LOW	Pass
50	641666	3625	16QAM	75	LOW	Pass
50	641666	3625	64QAM	75	LOW	Pass
50	641666	3625	256QAM	75	LOW	Pass
50	645000	3675	BPSK	75	LOW	Pass
50	645000	3675	QPSK	75	LOW	Pass
50	645000	3675	16QAM	75	LOW	Pass
50	645000	3675	64QAM	75	LOW	Pass
50	645000	3675	256QAM	75	LOW	Pass
100	640000	3600	BPSK	100	LOW	Pass
100	640000	3600	QPSK	100	LOW	Pass
100	640000	3600	16QAM	100	LOW	Pass
100	640000	3600	64QAM	100	LOW	Pass
100	640000	3600	256QAM	100	LOW	Pass
100	641666	3625	BPSK	100	LOW	Pass
100	641666	3625	QPSK	100	LOW	Pass
100	641666	3625	16QAM	100	LOW	Pass
100	641666	3625	64QAM	100	LOW	Pass
100	641666	3625	256QAM	100	LOW	Pass
100	643332	3650	BPSK	100	LOW	Pass
100	643332	3650	QPSK	100	LOW	Pass
100	643332	3650	16QAM	100	LOW	Pass
100	643332	3650	64QAM	100	LOW	Pass
100	643332	3650	256QAM	100	LOW	Pass

Test Plot(s)

Conducted method

Test limit:

The spurious (unwanted) emission limits specified in the individual FCC rule parts applicable to licensed digital transmitters (typically referred to under the heading 'emission limits') normally apply to any and all emissions that are present outside of the authorized frequency band/block and apply to emissions in both the out-of-band and spurious domains. In some rule parts, the unwanted emission limits are specified by an emission mask that defines the applicable limit as a function of the frequency range relative to the authorized frequency block.

Typically, unwanted emissions are required by the licensed rule parts to be attenuated below the transmitter power by a factor of at least X + 10log(P) dB, where P represents the transmitter power expressed in watts and X is a specified scalar value (e.g., 43). This specification can be interpreted in one of two equivalent ways. First, the required attenuation can be construed to be relative to the mean carrier power, with the resultant of the equation X + 10log(P) being expressed in dBc (dB relative to the maximum carrier power). Alternatively, the specification can be interpreted as an absolute limit when the specified attenuation is actually subtracted from the maximum permissible transmitter power [i.e., 10log(P) – {X + 10log(P)}], resulting in an absolute level of -X dBW [or (-X + 30) dBm]. See section 4.

Test procedure:

The RF output of the transceiver was connected to a spectrum analyzer and simulator through appropriate attenuation. The resolution bandwidth of the spectrum analyzer was set at 100 kHz below 1 GHz and 1 MHz above 1 GHz. Sufficient scans were taken to show any out of band emissions up to 10th harmonics.

Conducted Emission Test-Up:

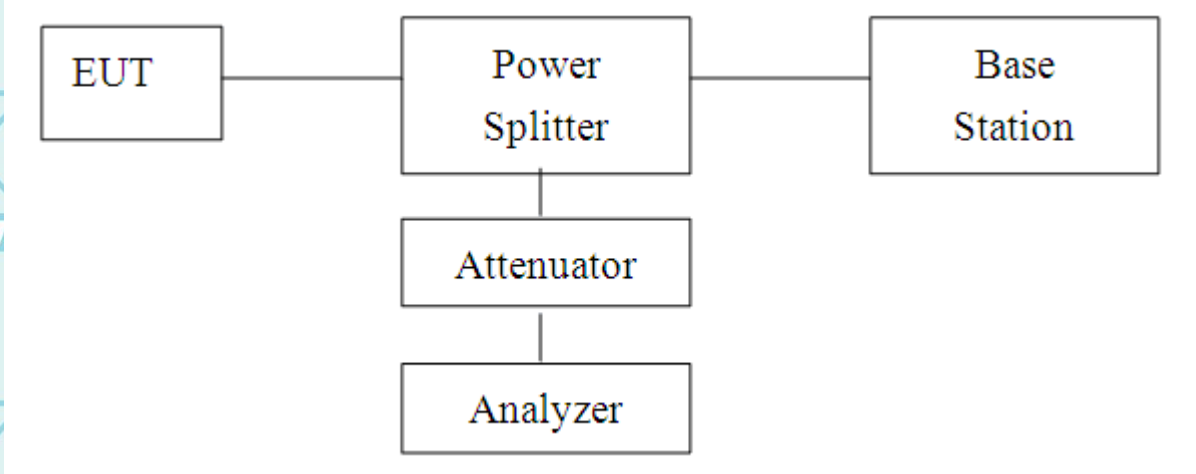

Radiated method

Test limit:

The spurious (unwanted) emission limits specified in the individual FCC rule parts applicable to licensed digital transmitters (typically referred to under the heading 'emission limits') normally apply to any and all emissions that are present outside of the authorized frequency band/block and apply to emissions in both the out-of-band and spurious domains. In some rule parts, the unwanted emission limits are specified by an emission mask that defines the applicable limit as a function of the frequency range relative to the authorized frequency block.

Typically, unwanted emissions are required by the licensed rule parts to be attenuated below the transmitter power by a factor of at least X + 10log(P) dB, where P represents the transmitter power expressed in watts and X is a specified scalar value (e.g., 43). This specification can be interpreted in one of two equivalent ways. First, the required attenuation can be construed to be relative to the mean carrier power, with the resultant of the equation X + 10log(P) being expressed in dBc (dB relative to the maximum carrier power). Alternatively, the specification can be interpreted as an absolute limit when the specified attenuation is actually subtracted from the maximum permissible transmitter power [i.e., 10log(P) – {X + 10log(P)}], resulting in an absolute level of -X dBW [or (-X + 30) dBm]. See section 4.

Test procedure:

The radiated emission tests were performed in the 3m Semi- Anechoic Chamber test site. The resolution bandwidth of the spectrum analyzer was set at 100 kHz below 1 GHz and 1 MHz above 1 GHz. Sufficient scans were taken to show any out of band emissions up to 10th harmonics.

Test setup:

(A）Radiated Emission Test-Up Frequency 30MHz~1GHz

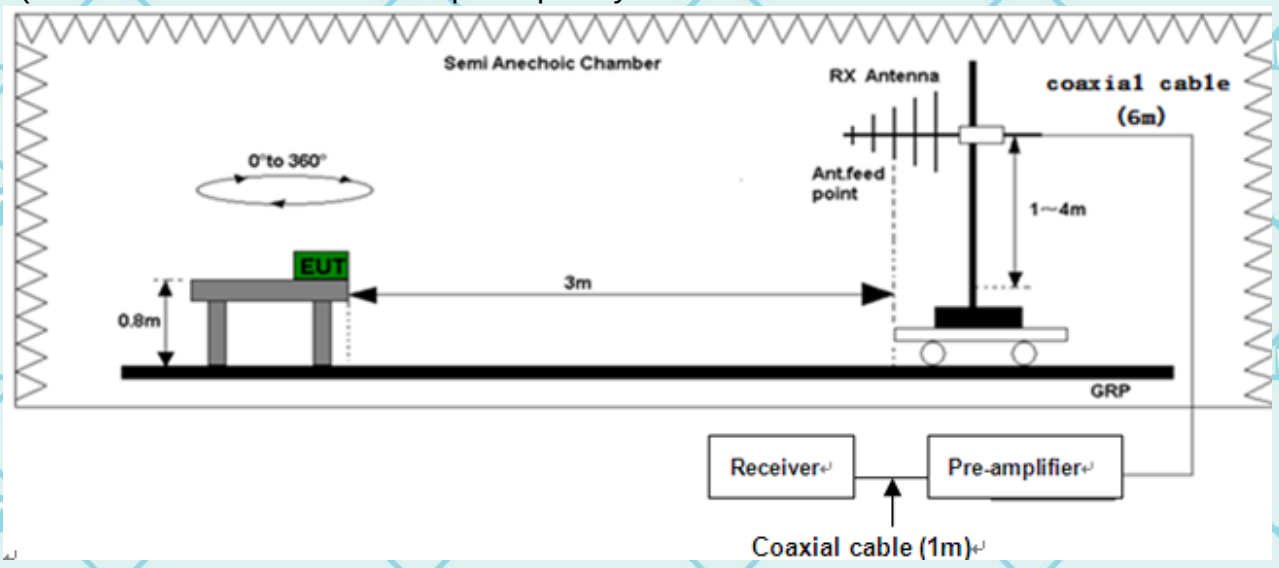

（B）Radiated Emission Test-Up Frequency Above 1GHz

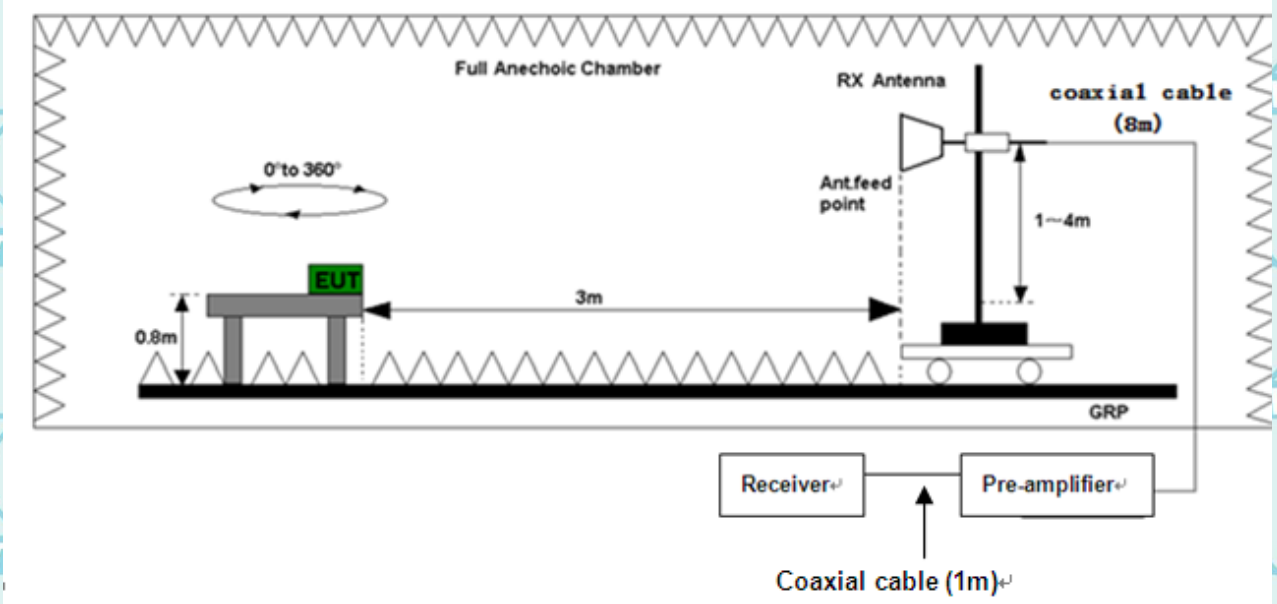

Note:

1, Below 30MHz no Spurious found.

2, UE is positioned at 3 axis at the pre-scan stage, and only the measurement of the worst caseis reported in this part.

List of final test modes:

n77(3550-3700Mhz):

Channel	Bandwidth	UL Channel	Frequency	Modulation	RB Size	RB Offset	Judgment
Middle	100	641666	3625	QPSK	100	LOW	Pass

n78(3550-3700Mhz):

Channel	Bandwidth	UL Channel	Frequency	Modulation	RB Size	RB Offset	Judgment
Middle	100	641666	3625	QPSK	100	LOW	Pass

Test record:
Note:

1. The substitution method is used. Substitution values at each frequency are measured before and saved to the test software. A "reference path loss" is established and the A_{Rpl} is the attenuation of “reference path loss”, and including the gain of receive antenna, the gain of the preamplifier, the cable loss and the air loss. The measurement results are obtained as described below: $Power=P_{Mea}+A_{Rpl}$
2. ARpl =Cable loss + Antenna gain

n77(3550-3700Mhz):
Horizontal：

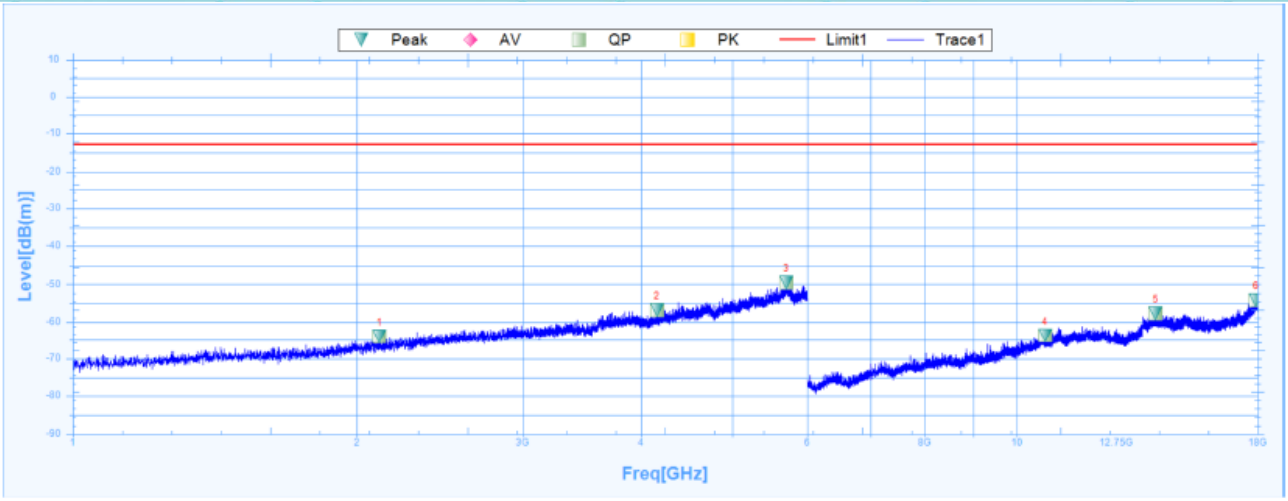

Susputed Data List										
NO.	Freq. [MHz]	Reading [dB(m)]	Factor [dB]	Level [dB(m)]	Limit [dB]	Margin [dB]	Deg [°]	Polarity	Trace	Verdict
1	2113.7500	-63.83	3.1	-66.93	-13	-50.83	297	Horizontal	PK	Pass
1	2113.7500		3.1		54		297	Horizontal	AV	Pass
2	4159.3750	-56.82	12.42	-69.24	-13	-43.82	255.2	Horizontal	PK	Pass
2	4159.3750		12.42		54		255.2	Horizontal	AV	Pass
3	5704.3750	-49.64	21.73	-71.37	-13	-36.64	41.2	Horizontal	PK	Pass
3	5704.3750		21.73		54		41.2	Horizontal	AV	Pass
4	10716.0000	-63.79	39.1	-102.89	-13	-50.79	358.6	Horizontal	PK	Pass
4	10716.0000		39.1		54		358.6	Horizontal	AV	Pass
5	14041.5000	-57.77	41.45	-99.22	-13	-44.77	312.9	Horizontal	PK	Pass
5	14041.5000		41.45		54		312.9	Horizontal	AV	Pass
6	17928.0000	-54.14	46.02	-100.16	-13	-41.14	163.4	Horizontal	PK	Pass
6	17928.0000		46.02		54		163.4	Horizontal	AV	Pass

Vertical：

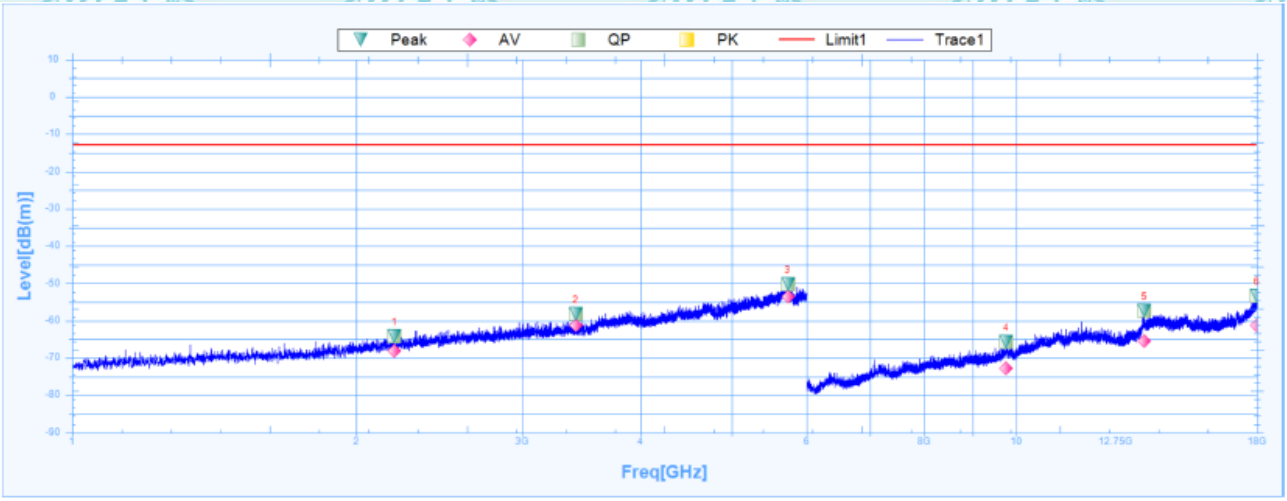

Susputed Data List										
NO.	Freq. [MHz]	Reading [dB(m)]	Factor [dB]	Level [dB(m)]	Limit [dB]	Margin [dB]	Deg [°]	Polarity	Trace	Verdict
1	2195.6250	-64.16	26.57	-90.73	-13	-51.16	122.5	Vertical	PK	Pass
1	2195.6250				54		122.5	Vertical	AV	Pass
2	3417.5000	-58.09	28.45	-86.54	-13	-45.09	2.7	Vertical	PK	Pass
2	3417.5000				54		2.7	Vertical	AV	Pass
3	5730.0000	-50.19	32.37	-82.56	-13	-37.19	21.1	Vertical	PK	Pass
3	5730.0000				54		21.1	Vertical	AV	Pass
4	9763.5000	-65.64	11.66	-77.3	-13	-52.64	359.1	Vertical	PK	Pass
4	9763.5000				54		359.1	Vertical	AV	Pass
5	13677.0000	-57.39	18.19	-75.58	-13	-44.39	133.5	Vertical	PK	Pass
5	13677.0000				54		133.5	Vertical	AV	Pass
6	17991.0000	-53.25	23.87	-77.12	-13	-40.25	320.1	Vertical	PK	Pass
6	17991.0000				54		320.1	Vertical	AV	Pass

n78(3550-3700Mhz):
Horizontal：

Susputed Data List										
NO.	Freq. [MHz]	Reading [dB(m)]	Factor [dB]	Level [dB(m)]	Limit [dB]	Margin [dB]	Deg [°]	Polarity	Trace	Verdict
1	2430.0000	-62.46	27.36	-89.82	-13	-49.46	360.1	Horizontal	PK	Pass
1	2430.0000				54		360.1	Horizontal	AV	Pass
2	3866.2500	-54.82	29.38	-84.2	-13	-41.82	231.3	Horizontal	PK	Pass
2	3866.2500				54		231.3	Horizontal	AV	Pass
3	5932.5000	-48.91	32.69	-81.6	-13	-35.91	360.1	Horizontal	PK	Pass
3	5932.5000				54		360.1	Horizontal	AV	Pass
4	11536.5000	-62	16.22	-78.22	-13	-49	156.5	Horizontal	PK	Pass
4	11536.5000				54		156.5	Horizontal	AV	Pass
5	14277.0000	-57.37	18.84	-76.21	-13	-44.37	215	Horizontal	PK	Pass
5	14277.0000				54		215	Horizontal	AV	Pass
6	17880.0000	-53.52	23.14	-76.66	-13	-40.52	326.2	Horizontal	PK	Pass
6	17880.0000				54		326.2	Horizontal	AV	Pass

Vertical：

Susputed Data List

NO.	Freq. [MHz]	Reading [dB(m)]	Factor [dB]	Level [dB(m)]	Limit [dB]	Margin [dB]	Deg [°]	Polarity	Trace	Verdict
1	2352.5000	-62.69	27.1	-89.79	-13	-49.69	218.1	Vertical	PK	Pass
1	2352.5000				54		218.1	Vertical	AV	Pass
2	3409.3750	-52.19	28.45	-80.64	-13	-39.19	0.5	Vertical	PK	Pass
2	3409.3750				54		0.5	Vertical	AV	Pass
3	5956.2500	-48.58	32.73	-81.31	-13	-35.58	172.6	Vertical	PK	Pass
3	5956.2500				54		172.6	Vertical	AV	Pass
4	11908.5000	-61.95	16.55	-78.5	-13	-48.95	110.9	Vertical	PK	Pass
4	11908.5000				54		110.9	Vertical	AV	Pass
5	13723.5000	-57.79	18.33	-76.12	-13	-44.79	167.1	Vertical	PK	Pass
5	13723.5000				54		167.1	Vertical	AV	Pass
6	17884.5000	-54.54	23.16	-77.7	-13	-41.54	356.1	Vertical	PK	Pass
6	17884.5000				54		356.1	Vertical	AV	Pass

9. OCCUPIED BANDWIDTH& EMISSION BANDWIDTH

Test limit:

The occupied bandwidth (OBW), that is the frequency bandwidth such that, below its lower and above its upper frequency limits, the mean powers radiated are each equal to 0.5 percent of the total mean power radiated by a given emission, shall be measured when modulated by an input signal such that its amplitude and symbol rate represent the maximum rated conditions under which the equipment will be operated. The signal shall be applied through any filter networks, pseudo-random generators or other devices required in normal service. Additionally, the occupied bandwidth shall be shown for operation with any devices used for modifying the spectrum when such devices are optional at the discretion of the user. [¡ì2.1049(h)]

Many of the individual rule parts specify a relative OBW in lieu of the 99% OBW. In such cases, the OBW is defined as the width of the signal between two points, one below the carrier center frequency and one above the carrier center frequency, outside of which all emissions are attenuated by at least X dB below the transmitter power, where the value of X is typically specified as 26.

The relative OBW must be measured and reported when it is specified in the applicable rule part; otherwise, the 99% OBW shall be measured and reported. The test report shall specify which OBW is reported.

A spectrum/signal analyzer or other instrument providing a spectral display is recommended for these measurements and the video bandwidth shall be set to a value at least three times greater than the IF/resolution bandwidth to avoid any amplitude smoothing. Video filtering shall not be used during occupied bandwidth tests.

The OBW shall be measured for all operating conditions that will affect the bandwidth results (e.g. variable modulations, coding, or channel bandwidth settings). See section 4.

Test procedure:

Occupied bandwidth – relative measurement procedure

The reference value is the highest level of the spectral envelope of the modulated signal.

a) The spectrum analyzer center frequency is set to the nominal EUT channel center frequency. The span range for the spectrum analyzer shall be between two and five times the anticipated OBW.

b) The nominal resolution bandwidth (RBW) shall be in the range of 1 to 5 % of the anticipated OBW, and the VBW shall be at least 3 times the RBW.

c) Set the reference level of the instrument as required to prevent the signal from exceeding the maximum input mixer level for linear operation. In general, the peak of the spectral envelope must be at least 10log (OBW / RBW) below the reference level.

d) NOTE—Steps a) through c) may require iteration to adjust within the specified tolerances.

e) The dynamic range of the spectrum analyzer at the selected RBW shall be at least 10 dB below the target “-X dB down” requirement (i.e., if the requirement calls for measuring the –26 dB OBW, the spectrum analyzer noise floor at the selected RBW shall be at least 36 dB below the reference value).

f) Set the detection mode to peak, and the trace mode to max hold.

g) Determine the reference value: Set the EUT to transmit a modulated signal. Allow the trace to stabilize. Set the spectrum analyzer marker to the highest level of the displayed trace (this is the reference value).

h) Determine the “-X dB down amplitude” as equal to (Reference Value – X). Alternatively, this calculation can be performed by the analyzer by using the marker-delta function.

i) Place two markers, one at the lowest and the other at the highest frequency of the

envelope of the spectral display such that each marker is at or slightly below the "–X dB down amplitude" determined in step g). If a marker is below this "-X dB down amplitude" value it shall be placed as close as possible to this value. The OBW is the positive frequency difference between the two markers.

j) The occupied bandwidth shall be reported by providing plot(s) of the measuring instrument display. The frequency and amplitude axes and scale shall be clearly labeled. Tabular data may be reported in addition to the plot(s).

Occupied bandwidth – power bandwidth (99%) measurement procedure

The following procedure shall be used for measuring (99 %) power bandwidth

a) The spectrum analyzer center frequency is set to the nominal EUT channel center frequency. The frequency span for the spectrum analyzer shall be set wide enough to capture all modulation products including the emission skirts (i.e., two to five times the OBW).

b) The nominal IF filter bandwidth (3 dB RBW) shall be in the range of 1 to 5 % of the anticipated OBW, and the VBW shall be at least 3 times the RBW.

c) Set the reference level of the instrument as required to keep the signal from exceeding the maximum input mixer level for linear operation. In general, the peak of the spectral envelope must be at least 10log (OBW / RBW) below the reference level.

d) NOTE—Steps a) through c) may require iteration to adjust within the specified tolerances.

e) Set the detection mode to peak, and the trace mode to max hold..

f) Use the 99 % power bandwidth function of the spectrum analyzer (if available) and report the measured bandwidth.

g) If the instrument does not have a 99 % power bandwidth function, the trace data points are to be recovered and directly summed in linear power terms. The recovered amplitude data points, beginning at the lowest frequency, are placed in a running sum until 0.5 % of the total is reached; that frequency is recorded as the lower frequency. The process is repeated until 99.5 % of the total is reached; that frequency is recorded as the upper frequency. The 99 % power bandwidth is the difference between these two frequencies.

h) The OBW shall be reported by providing plot(s) of the measuring instrument display. The frequency and amplitude axes and scale shall be clearly labeled. Tabular data may be reported in addition to the plot(s).

Test setup:

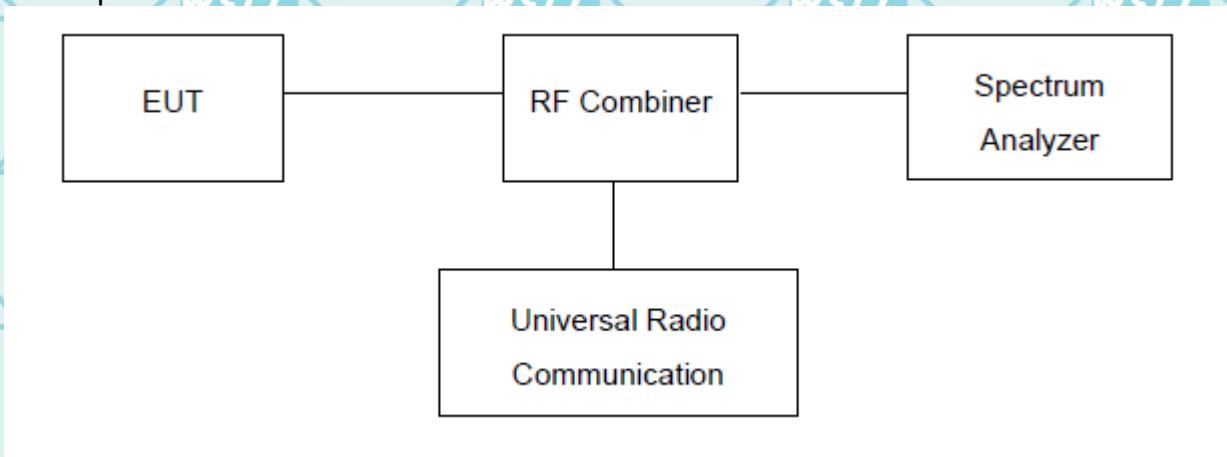

9.1. Measurement Result

Note: Please refer to Annex（NR 4 Occupied Bandwidth） for more test data

10. BAND EDGE

Test Limit:

The radio frequency voltage or powers generated within the equipment and appearing on a spurious frequency shall be checked at the equipment output terminals when properly loaded with a suitable artificial antenna. Curves or equivalent data shall show the magnitude of each harmonic and other spurious emission that can be detected when the equipment is operated under the conditions specified in §2.1049 as appropriate. The magnitude of spurious emissions which are attenuated more than 20 dB below the permissible value need not be specified. See section 4.

Test procedure:

The RF output of the transmitter was connected to the input of the spectrum analyzer through sufficient attenuation.

Test setup:

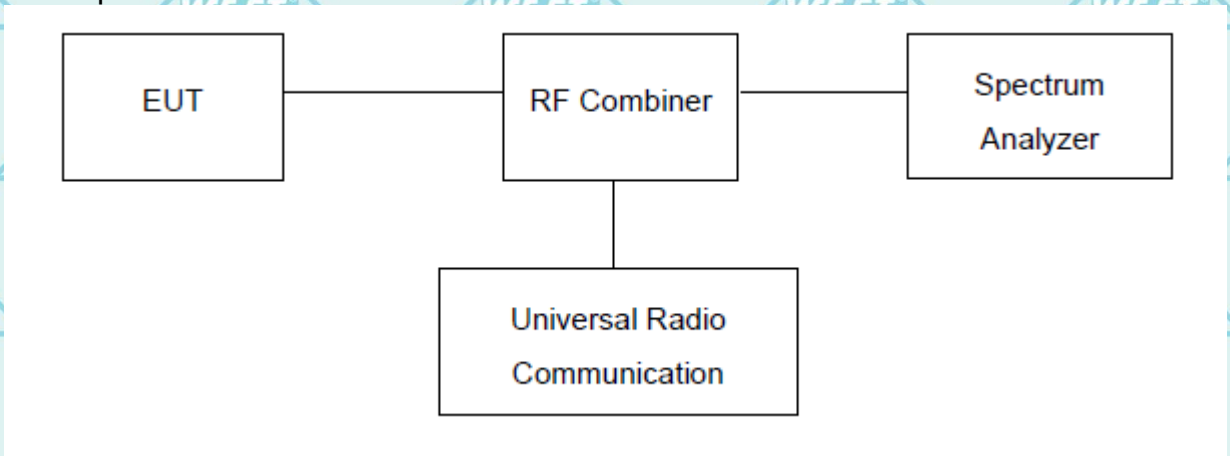

10.1. Measurement Result

Note: Please refer to Annex（NR 5 Band Edge） for more test data

11. SPURIOUS EMISSION (Conducted and Radiated)

Conducted method

Test limit:

The spurious (unwanted) emission limits specified in the individual FCC rule parts applicable to licensed digital transmitters (typically referred to under the heading 'emission limits') normally apply to any and all emissions that are present outside of the authorized frequency band/block and apply to emissions in both the out-of-band and spurious domains. In some rule parts, the unwanted emission limits are specified by an emission mask that defines the applicable limit as a function of the frequency range relative to the authorized frequency block.

Typically, unwanted emissions are required by the licensed rule parts to be attenuated below the transmitter power by a factor of at least X + 10log(P) dB, where P represents the transmitter power expressed in watts and X is a specified scalar value (e.g., 43). This specification can be interpreted in one of two equivalent ways. First, the required attenuation can be construed to be relative to the mean carrier power, with the resultant of the equation X + 10log(P) being expressed in dBc (dB relative to the maximum carrier power). Alternatively, the specification can be interpreted as an absolute limit when the specified attenuation is actually subtracted from the maximum permissible transmitter power [i.e., 10log(P) – {X + 10log(P)}], resulting in an absolute level of -X dBW [or (-X + 30) dBm]. See section 4.

Test procedure:

The RF output of the transceiver was connected to a spectrum analyzer and simulator through appropriate attenuation. The resolution bandwidth of the spectrum analyzer was set at 100 kHz below 1 GHz and 1 MHz above 1 GHz. Sufficient scans were taken to show any out of band emissions up to 10th harmonics.

Conducted Emission Test-Up:

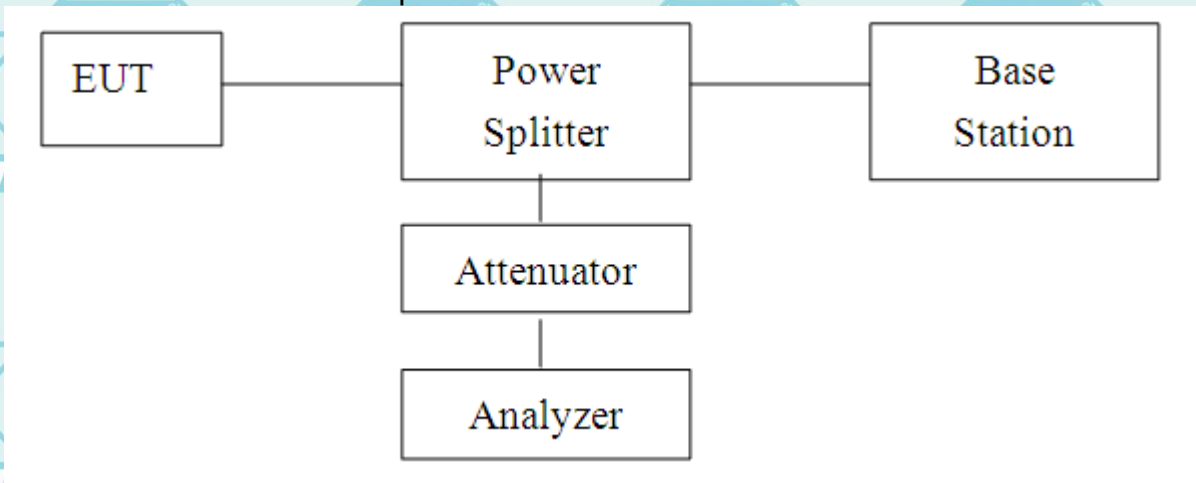

11.1. Measurement Result

Note: Please refer to Annex（NR 6 Out-of-band emissions）for more test data

12. FREQUENCY STABILITY

Test limit:

The frequency stability of the transmitter shall be measured while varying the ambient temperatures and supply voltages over the ranges specified in §2.1055. The specific frequency stability limits are provided in the relevant rules section(s). see section 4.

Test procedure:

Frequency Stability vs. Temperature: The equipment under test was connected to an external DC power supply and the RF output was connected to communication test set via feed-through attenuators. The EUT was placed inside the temperature chamber. The DC leads and RF output cable exited the chamber through an opening made for the purpose.

Test setup:

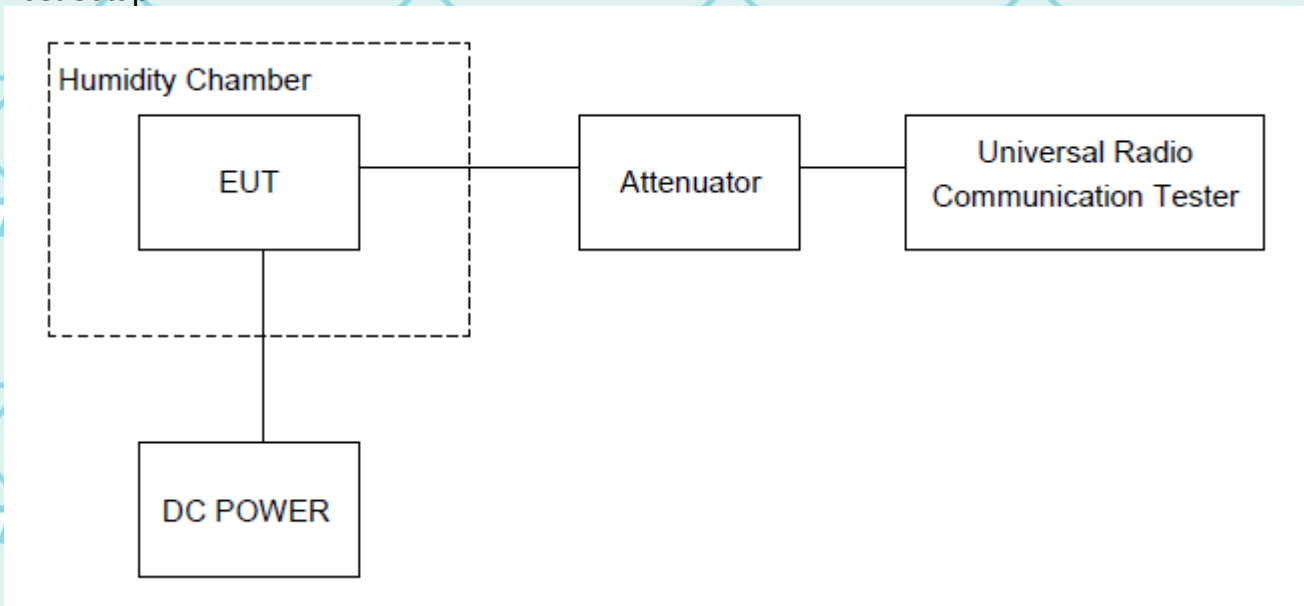

12.1. Measurement Result (Worst)

Note: Please refer to Annex（NR 2 Frequency Error against） for more test data

13. Test Setup Photographs

Please refer to Annex "Set Up Photos-RF" for test setup photos

---END OF REPORT---