DFS TEST REPORT

Report No.:	JYTSZ-R12-2400724
Applicant:	INFINIX MOBILITY LIMITED
Address of Applicant:	FLAT N 16/F BLOCK B UNIVERSAL INDUSTRIAL CENTRE 19-25 SHAN MEI STREET FOTAN NT HONGKONG
Equipment Under Test (EUT)	
Product Name:	Mobile Phone
Model No.:	X6881
Trade mark:	Infinix
FCC ID:	2AIZN-X6881
Applicable standards:	FCC CFR Title 47 Part 15 Subpart E Section 15.407
Date of sample receipt:	27 Jun., 2024
Date of Test:	28 Jun., to 12 Aug., 2024
Date of report issued:	13 Aug., 2024
Test Result:	PASS

Tested by:	Victor Zhang ***Project Engineer***	***Date:***	*13 Aug., 2024*
Reviewed by:	Luo Ping ***Senior Engineer***	***Date:***	*13 Aug., 2024*
Approved by:	James Wei ***Manager***	***Date:***	*13 Aug., 2024*

This equipment has been shown to be capable of compliance with the applicable technical standards as indicated in the measurement report and was tested in accordance with the measurement procedures specified in above the application standard version. Test results reported herein relate only to the item(s) tested.

This document cannot be reproduced except in full, without prior written approval of the Company. Any unauthorized alteration, forgery or falsification of the content or appearance of this document is unlawful and offenders may be prosecuted to the fullest extent of the law. Unless otherwise stated the results shown in this test report refer only to the sample(s) tested and such sample(s) are retained for 90 days only.

2 Version

Version No.	Date	Description
00	*13 Aug., 2024*	*Original*

3 Contents

Page

1 COVER PAGE 1

2 VERSION 2

3 CONTENTS 3

4 TEST SUMMARY 4

5 GENERAL INFORMATION 5

5.1 CLIENT INFORMATION 5
5.2 GENERAL DESCRIPTION OF E.U.T. 5
5.3 TEST ENVIRONMENT AND MODE, AND TEST SAMPLES PLANS 5
5.4 DESCRIPTION OF SUPPORT UNITS 6
5.5 RELATED SUBMITTAL(S) / GRANT (S) 6
5.6 ADDITIONS TO, DEVIATIONS, OR EXCLUSIONS FROM THE METHOD 6
5.7 LABORATORY FACILITY 6
5.8 LABORATORY LOCATION 6
5.9 TEST INSTRUMENTS LIST 6

6 DFS TECHNICAL REQUIREMENTS 7

6.1 DFS PARAMETERS 7
6.2 DFS TECHNICAL REQUIREMENTS 9
6.3 DFS THRESHOLD LEVEL 9
6.4 TEST SETUP BLOCK 9
6.5 EUT CONFIGURATION FOR DFS TEST 10

7 TEST RESULT 11

7.1 VERIFICATION OF RADAR TYPE AND LEVEL+ 11
7.2 CHANNEL MOVE TIME AND CHANNEL CLOSING TRANSMISSION TIME 15

4 Test Summary

Test Items	Limit	Result
Channel Availability Check	> 60 seconds	N/A
UNII Detection Bandwidth	> 100% of the UNII 99% transmission power bandwidth	N/A
Statistical Performance Check	Radar type 1,2,3,4 ≧ 60% Aggregate Radar type 1~4 and 5 ≧ 80% Radar type 6 ≧ 70%	N/A
Channel Move Time	< 10 seconds	Pass
Channel Closing Transmission Time	< 20ms + aggregate of 60ms over remaining 10 second period	Pass
Non-Occupancy Period	> 30 minutes	Pass

Remark:

1. *Pass: means meet the requirements.*
2. *N/A: means not applicable.*
3. *The cable insertion loss used by "RF Output Power" and other conduction measurement items is 0.5dB (provided by the customer).*

Test Method:	*ANSI C63.4-2014* *ANSI C63.10-2013* *KDB 789033 D02 General UNII Test Procedures New Rules v02r01*

5 General Information

5.1 Client Information

Applicant:	INFINIX MOBILITY LIMITED
Address:	FLAT N 16/F BLOCK B UNIVERSAL INDUSTRIAL CENTRE 19-25 SHAN MEI STREET FOTAN NT HONGKONG
Manufacturer:	INFINIX MOBILITY LIMITED
Address:	FLAT N 16/F BLOCK B UNIVERSAL INDUSTRIAL CENTRE 19-25 SHAN MEI STREET FOTAN NT HONGKONG
Factory:	SHENZHEN TECNO TECHNOLOGY CO., LTD.
Address:	101, Building 24, Waijing Industrial Park, Fumin Community, Fucheng Street, Longhua District, Shenzhen City, P.R.China

5.2 General Description of E.U.T.

Product Name:	Mobile Phone
Model No.:	X6881
Transmitter frequency range:	5250MHz~5350MHz, 5470MHz~5725MHz
Modulation type:	OFDM
WLAN Function:	802.11a/802.11n/802.11ac
Bandwidth:	20MHz/40MHz/80MHz
Antenna Type:	Internal Antenna
Antenna Gain:	ANT13: -2.73 dBi (declare by applicant)
	ANT14: 1.92 dBi (declare by applicant)
DFS Operation Type:	☐ Master Device ☐ Slaver Device with Radar detection function ☒ Slaver Device without Radar detection function
Power supply:	Rechargeable Li-ion Polymer Battery DC3.87V, 4900mAh
AC Adapter:	Model: U330XSB Input: AC100-240V, 50/60Hz, 1.5A Output: DC 5.0V, 3.0A 15.0W or 5.0-10.0V, 3.3A or 11.0V, 3.0A 33.0W MAX
Test Sample Condition:	The test samples were provided in good working order with no visible defects.

5.3 Test environment and mode, and test samples plans

Data Load mode:	Keep the EUT in normal transmitting mode by Wi-Fi
Temperature:	20 ~ 25 ℃
Humidity:	60% ~ 65%
Atmospheric pressure:	1012 kPa
Remark: *JianYan Testing Group Shenzhen Co., Ltd. is only responsible for the test project data of the above samples, and will keep the above samples for a month.*	

5.4 Description of Support Units

Manufacturer	Description	Model	Serial Number	FCC ID/DOC
LENOVO	ThinkPad T14 Gen 1	SL10Z47277	2847A65	DoC
ASUS	Wi-Fi Router	GT-AEX11000	N/A	FCC ID: MSQ-RTAXJF00.

5.5 Related Submittal(s) / Grant (s)

This is an original grant, no related submittals and grants.

5.6 Additions to, deviations, or exclusions from the method

No

5.7 Laboratory Facility

The test facility is recognized, certified, or accredited by the following organizations:

- **FCC - Designation No.: CN1211**

JianYan Testing Group Shenzhen Co., Ltd. has been accredited as a testing laboratory by FCC(Federal Communications Commission). The test firm Registration No. is 727551.

- **ISED – CAB identifier.: CN0021**

The 3m Semi-anechoic chamber and 10m Semi-anechoic chamber of JianYan Testing Group Shenzhen Co., Ltd. has been Registered by Certification and Engineering Bureau of Industry Canada for radio equipment testing with Registration No.: 10106A-1.

- **CNAS - Registration No.: CNAS L15527**

JianYan Testing Group Shenzhen Co., Ltd. is accredited to ISO/IEC 17025:2017 General Requirements for the Competence of Testing and Calibration laboratories for the competence of testing. The Registration No. is CNAS L15527.

- **A2LA - Registration No.: 4346.01**

This laboratory is accredited in accordance with the recognized International Standard ISO/IEC 17025:2017 General requirements for the competence of testing and calibration laboratories. The test scope can be found as below link: https://portal.a2la.org/scopepdf/4346-01.pdf

5.8 Laboratory Location

JianYan Testing Group Shenzhen Co., Ltd.
Address: No.101, Building 8, Innovation Wisdom Port, No.155 Hongtian Road, Huangpu Community, Xinqiao Street, Bao'an District, Shenzhen, Guangdong, People's Republic of China.
Tel: +86-755-23118282, Fax: +86-755-23116366
Email: info-JYTee@lets.com, Website: http://jyt.lets.com

5.9 Test Instruments list

Conducted Method:					
Test Equipment	**Manufacturer**	**Model No.**	**Manage No.**	**Cal. Date (mm-dd-yy)**	**Cal. Due date (mm-dd-yy)**
Spectrum Analyzer	Keysight	N9010B	WXJ004-3	11-01-2023	10-31-2024
Temperature Humidity Chamber	ZHONG ZHI	CZ-A-80D	WXJ032-3	01-09-2023	01-08-2025
Power Detector Box	MWRFTEST	MW100-PSB	WXJ007-4	09-25-2023	09-24-2024
DC Power Supply	Keysight	E3642A	WXJ025-2	N/A	
RF Control Unit	MWRFTEST	MW100-RFCB	WXG006	N/A	
Test Software	MWRFTEST	MTS 8310	Version: 2.0.0.0		

6 DFS Technical Requirements

6.1 DFS Parameters

Table D.1: Applicability of DFS Requirements Prior to Use of a Channel			
Requirement	Operational Mode		
	Master	Client Without Radar Detection	Client With Radar Detection
Non-Occupancy period	Yes	Not required	Yes
DFS Detection Threshold	Yes	Not required	Yes
Channel Availability Check Time	Yes	Not required	Not required
U-NII Detection Bandwidth	Yes	Not required	Yes

Table D.2: Applicability of DFS requirements during normal operation		
Requirement	Operational Mode	
	Master	Client Without Radar Detection
DFS Detection Threshold	Yes	Not required
Channel Closing Transmission Time	Yes	Yes
Channel Move Time	Yes	Yes
U-NII Detection Bandwidth	Yes	Not required

Additional requirements for devices with multiple bandwidth modes	Operational Mode	
	Master Device or Client with Radar Detection	Client Without Radar Detection
U-NII Detection Bandwidth and Statistical Performance Check	All BW modes must be tested	Not required
Channel Move Time and Channel Closing Transmission Time	Test using widest BW mode available	Test using the widest BW mode available for the link
All other tests	Any single BW mode	Not required
Note: Frequencies selected for statistical performance check (Section 7.8.4) should include several frequencies within the radar detection bandwidth and frequencies near the edge of the radar detection bandwidth. For 802.11 devices it is suggested to select frequencies in each of the bonded 20 MHz channels and the channel center frequency.		

Table D.3: DFS Detection Thresholds	
Maximum Transmit Power	Value (See Notes 1,2, and 3)
EIRP ≧ 200 mW	-64 dBm
EIRP < 200 mW and power spectral density < 10 dBm/MHz	-62 dBm
EIRP < 200 mW that do not meet the power spectral density requirement	-64 dBm
Note 1: This is the level at the input of the receiver assuming a 0 dBi receive antenna. Note 2: Throughout these test procedures an additional 1 dB has been added to the amplitude of the test transmission waveforms to account for variations in measurement equipment. This will ensure that the test signal is at or above the detection threshold level to trigger a DFS response. Note 3: EIRP is based on the highest antenna gain. For MIMO devices refer to KDB Publication 662911 D01.	

Table D.4: DFS requirement values	
Parameter	**Value**
Non-occupancy period	Minimum 30 minutes
Channel Availability Check Time	60 seconds
Channel Move Time	10 seconds (See Note 1)
Channel Closing Transmission Time	200 ms + an aggregate of 60ms over remaining 10 second period (See Notes 1 and 2)
U-NII Detection Bandwidth	Minimum 100% of the UNII 99% transmission power bandwidth (See Note 3)

Note 1: Channel Move Time and the Channel Closing Transmission Time should be performed with Radar Type 0. The measurement timing begins at the end of the Radar Type 0 burst.
Note 2: The Channel Closing Transmission Time is comprised of 200 milliseconds starting at the beginning of the Channel Move Time plus any additional intermittent control signals required to facilitate a Channel move (an aggregate of 60 milliseconds) during the remainder of the 10 second period. The aggregate duration of control signals will not count quiet periods in between transmissions.
Note 3: During the U-NII Detection Bandwidth detection test, radar type 0 should be used. For each frequency step, the minimum percentage of detection is 90 percent. Measurements are performed with no data traffic.

Table D.5: Short Pulse Radar Test Waveforms					
Radar Type	Pulse Width (μsec)	PRI (μsec)	Number of Pulses	Minimum Percentage of Successful Detection	Minimum Number of Trials
0	1	1428	18	See Note 1	See Note 1
1	1	Test A Test B	$\text{Roundup}\left\{\left(\frac{1}{360}\right)\cdot\left(\frac{19\cdot 10^6}{\text{PRI}_{\mu sec}}\right)\right\}$	60%	30
2	1-5	150-230	23-29	60%	30
3	6-10	200-500	16-18	60%	30
4	11-20	200-500	12-16	60%	30
Aggregate (Radar Types 1-4)				80%	120

Note 1: Short Pulse Radar Type 0 should be used for the detection bandwidth test, channel move time, and channel closing time tests.

Table D.6: Long Pulse Radar Test Waveform							
Radar Type	Pulse Width (μsec)	Chirp Width (MHz)	PRI (μsec)	Number of Pulses per Burst	Number of Bursts	Minimum Percentage of Successful Detection	Minimum Number of Trials
5	50-100	5-20	1000-2000	1-3	8-20	80%	30

Long Pulse Radar Test Signal Wave form 12 second transmission

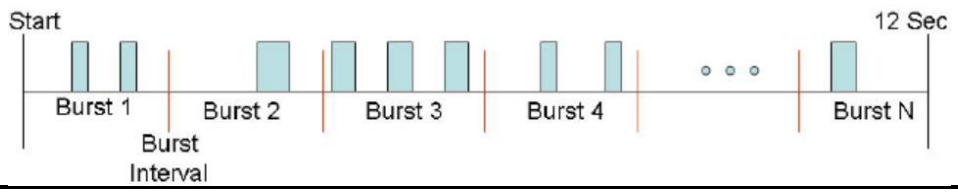

Table D.7: Frequency Hopping Radar Test Waveform							
Radar Type	Pulse Width (μsec)	PRI (μsec)	Pulses per Hop	Hopping Rate (kHz)	Hopping Sequence Length (msec)	Minimum Percentage of Successful Detection	Minimum Number of Trials
6	1	333	0	0.333	300	70%	30

6.2 DFS Technical Requirements

Requirement	DFS Operational mode		
	☐ Master	☒ Slave without Radar Detection	☐ Slave with Radar Detection
Channel Availability Check	√	Not Required	Not Required
UNII Detection Bandwidth	√	Not Required	√
Statistical Performance Check	√	Not Required	√
Channel Move Time	√	√	√
Channel Closing Transmission Time	√	√	√
Non-Occupancy Period	√	Not Required	√

6.3 DFS Threshold Level

DFS Threshold Level	
5250MHz ~ 5350MHz	-64 dBm @ antenna connector
5470MHz ~ 5725MHz	-64 dBm @ antenna connector
Note: The worst case level was selected to perform the test.	

6.4 Test Setup Block

☐ **For master device**

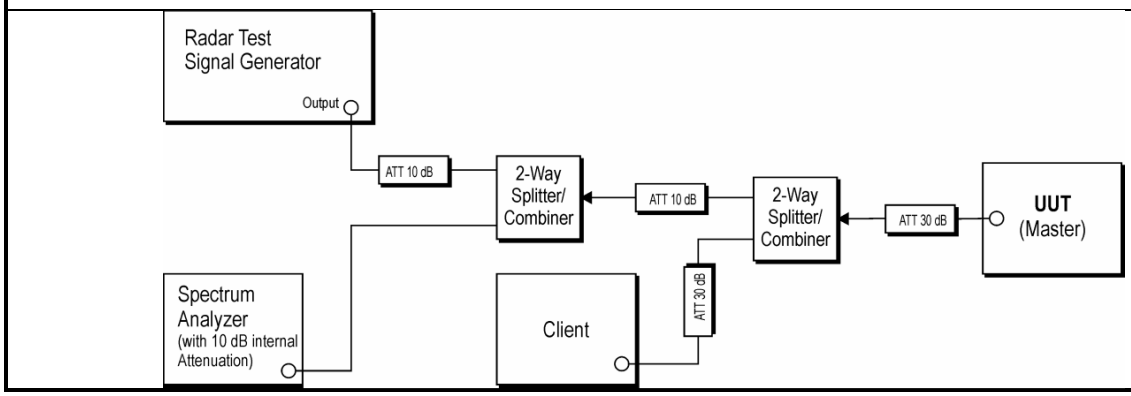

☒ **For Slaver without radar detection function device**

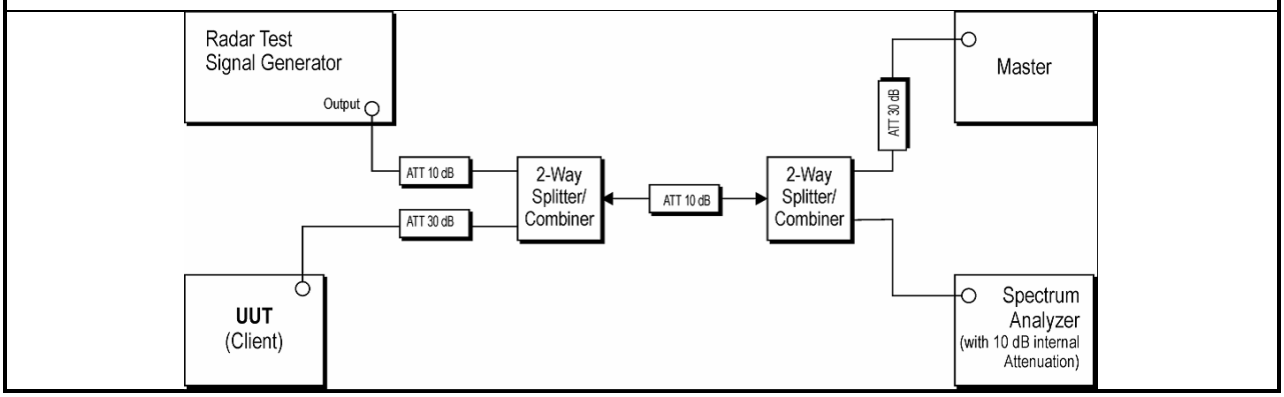

☐ **For Slaver with radar detection function device**

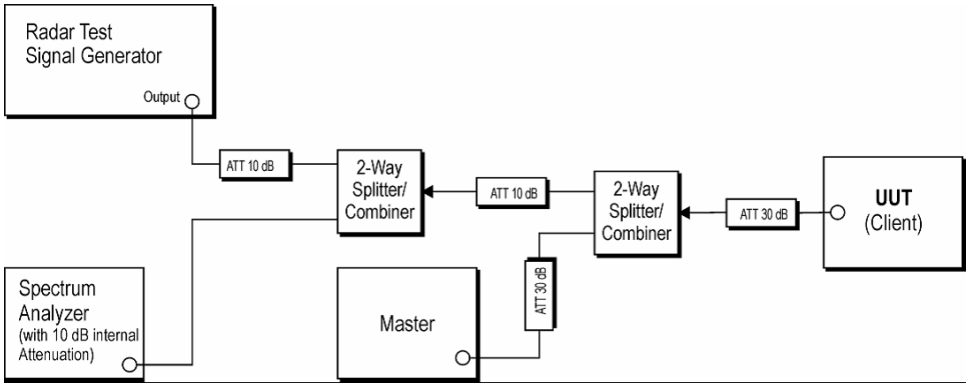

6.5 EUT Configuration for DFS Test

Test Items	Channel Frequency
Channel Move Time	5290MHz, 5320MHz 5600MHz, 5610MHz
Channel Closing Transmission Time	5290MHz, 5320MHz 5600MHz, 5610MHz

7 Test Result

7.1 Verification of Radar Type and Level+

ANT13:

5.3G

5290MHz

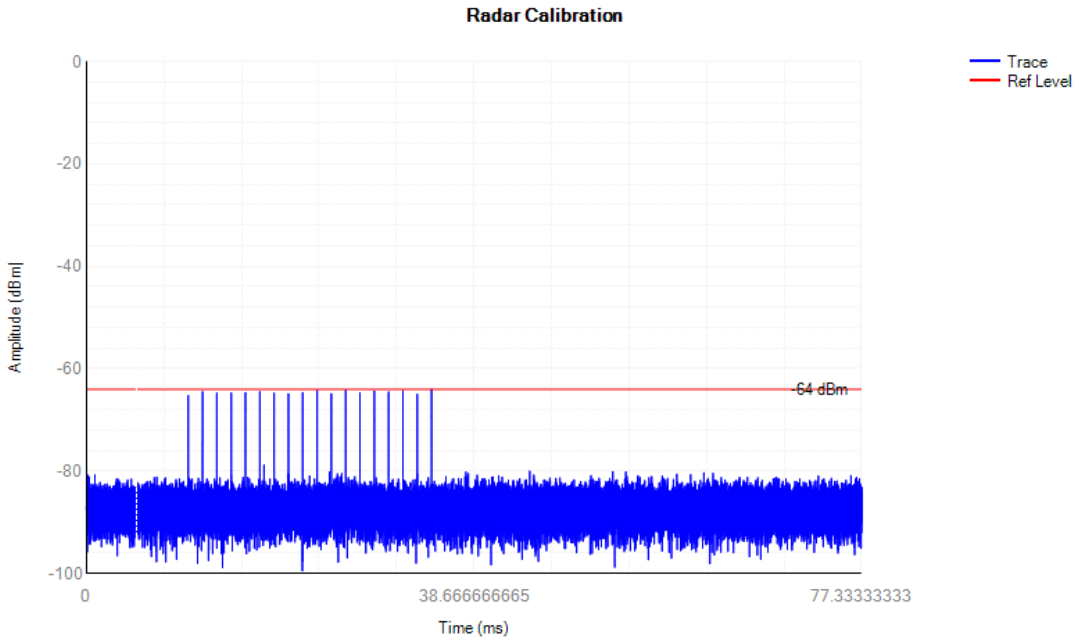

Radar Type 0

5320MHz

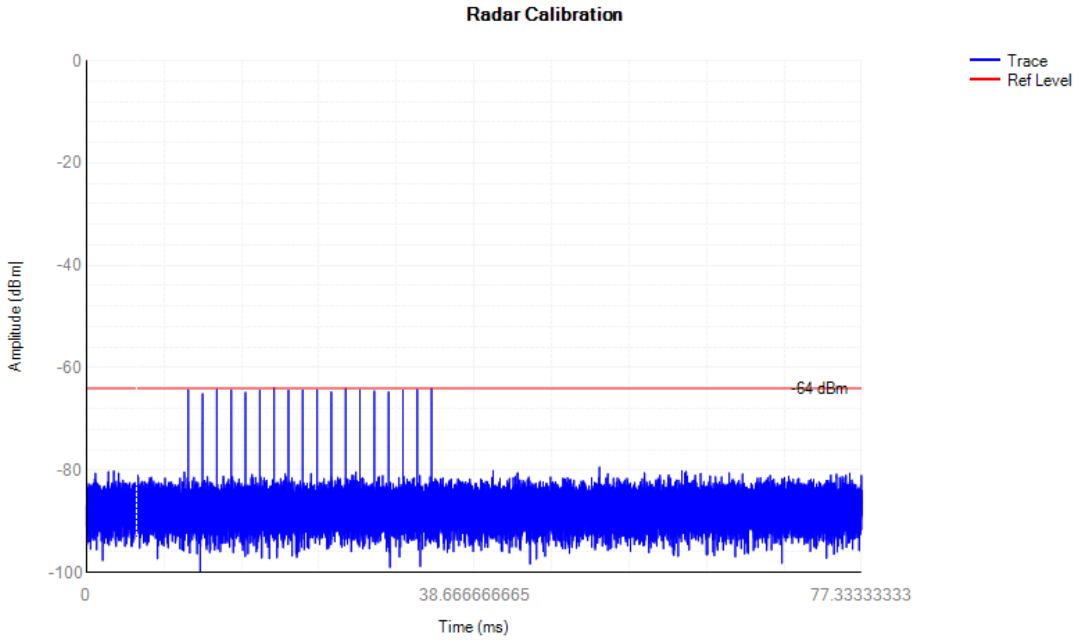

Radar Type 0

5.6G

5600MHz

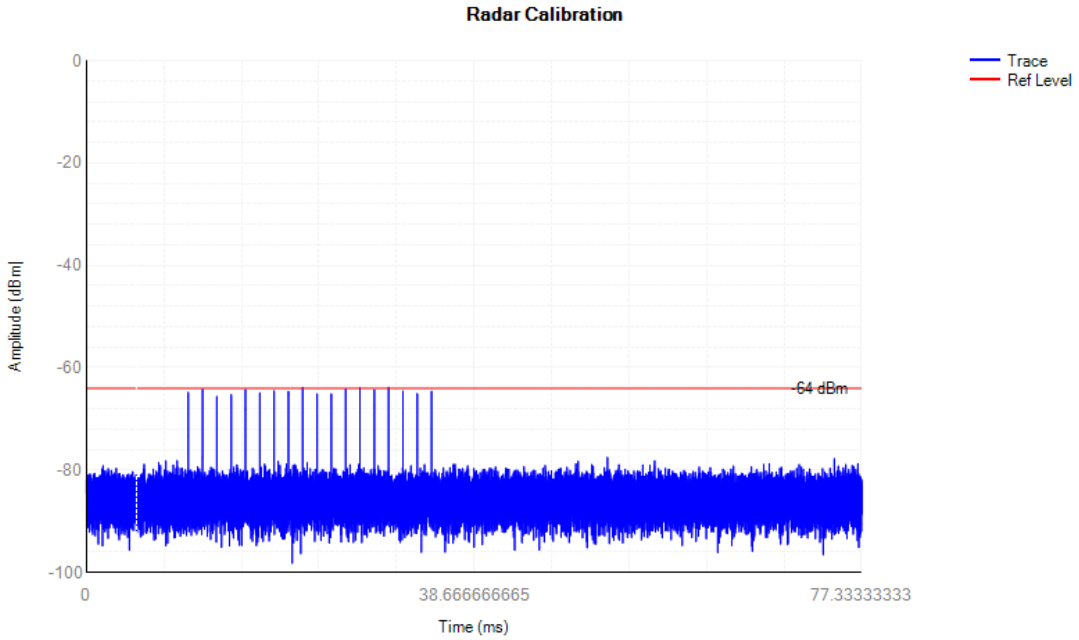

Radar Type 0

5610MHz

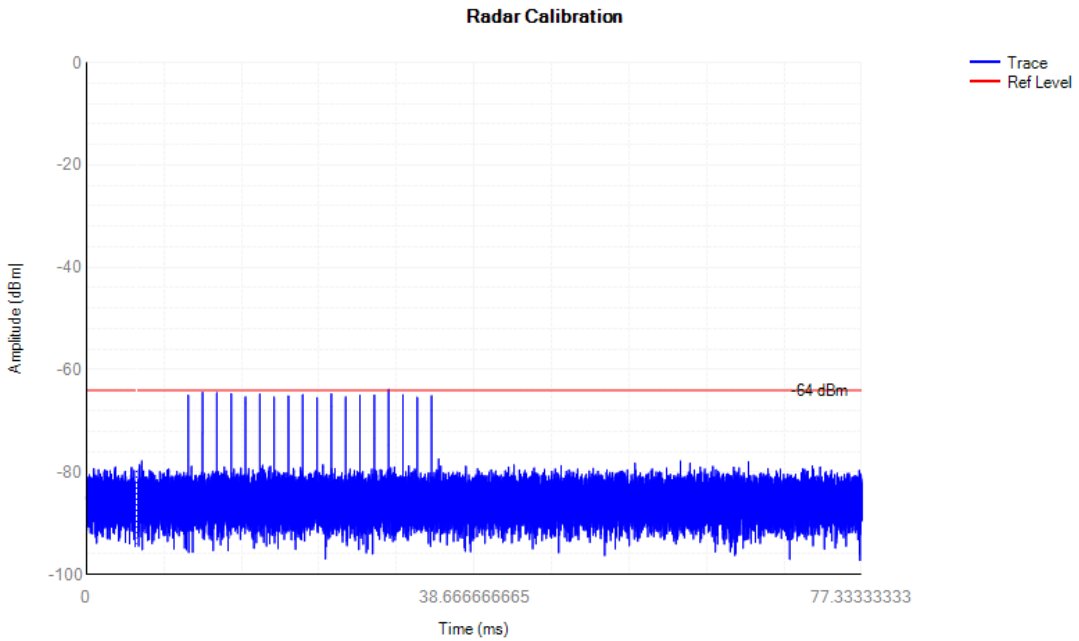

Radar Type 0

ANT14:

5.3G

5290MHz

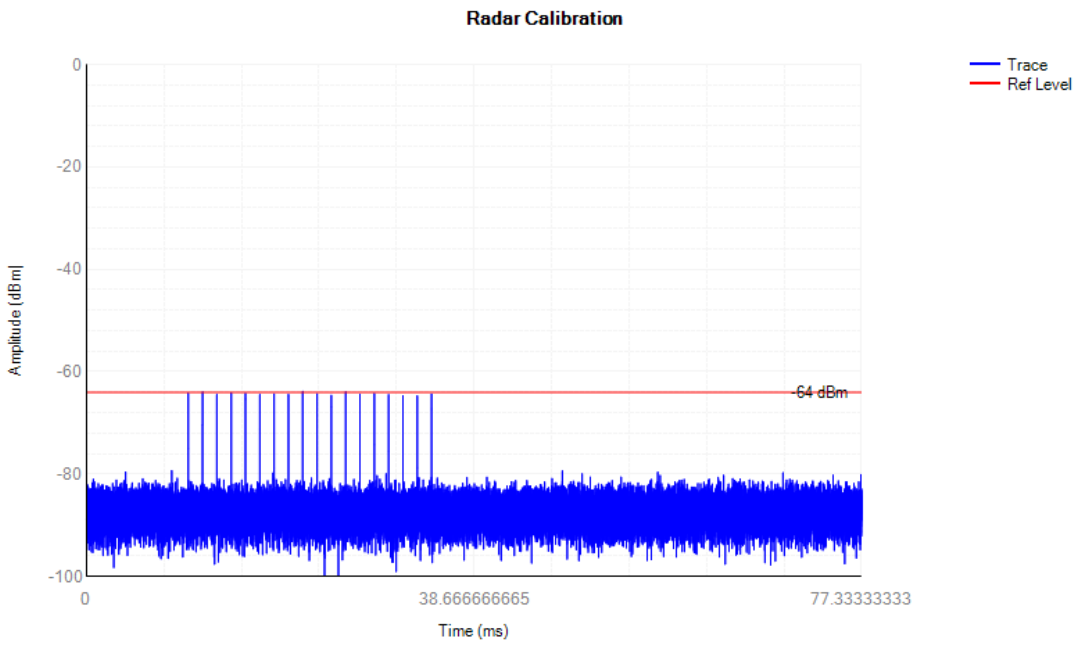

Radar Type 0

5320MHz

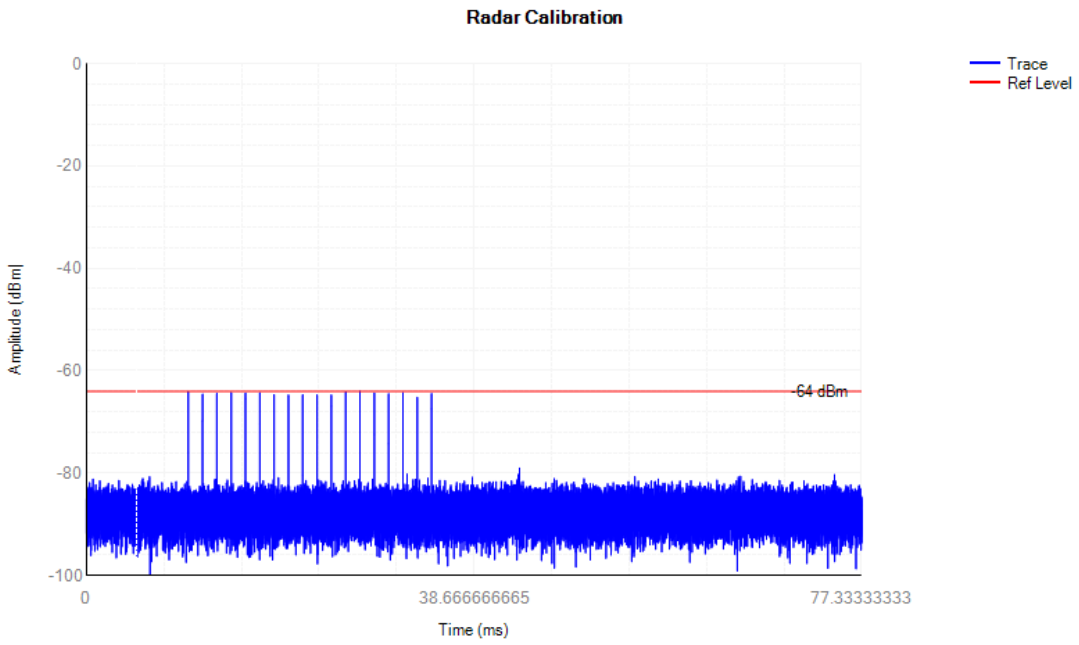

Radar Type 0

5.6G

5600MHz

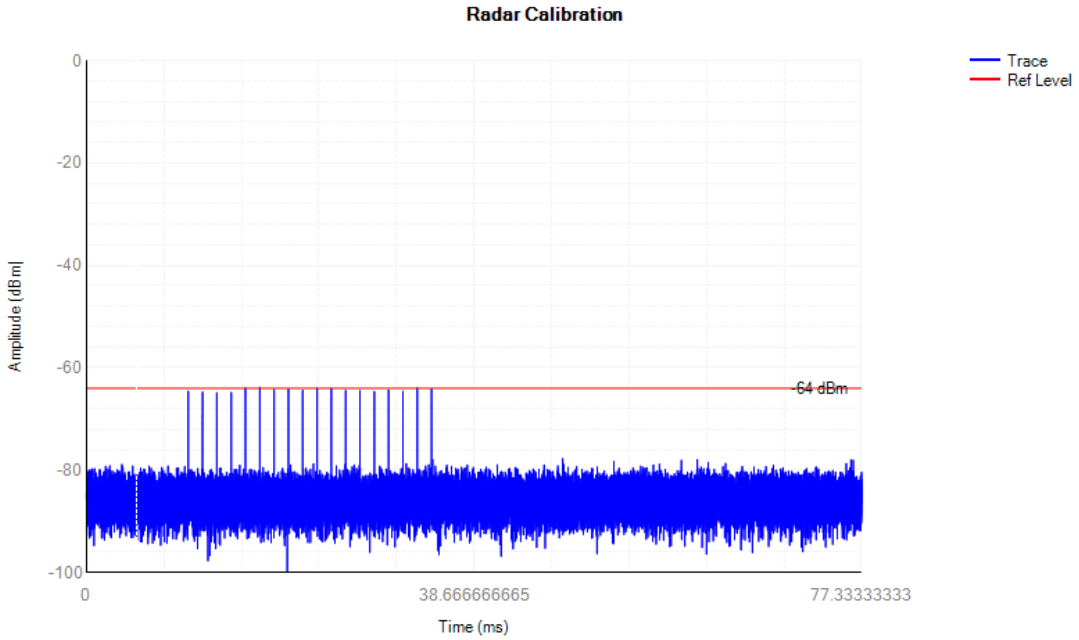

Radar Type 0

5610MHz

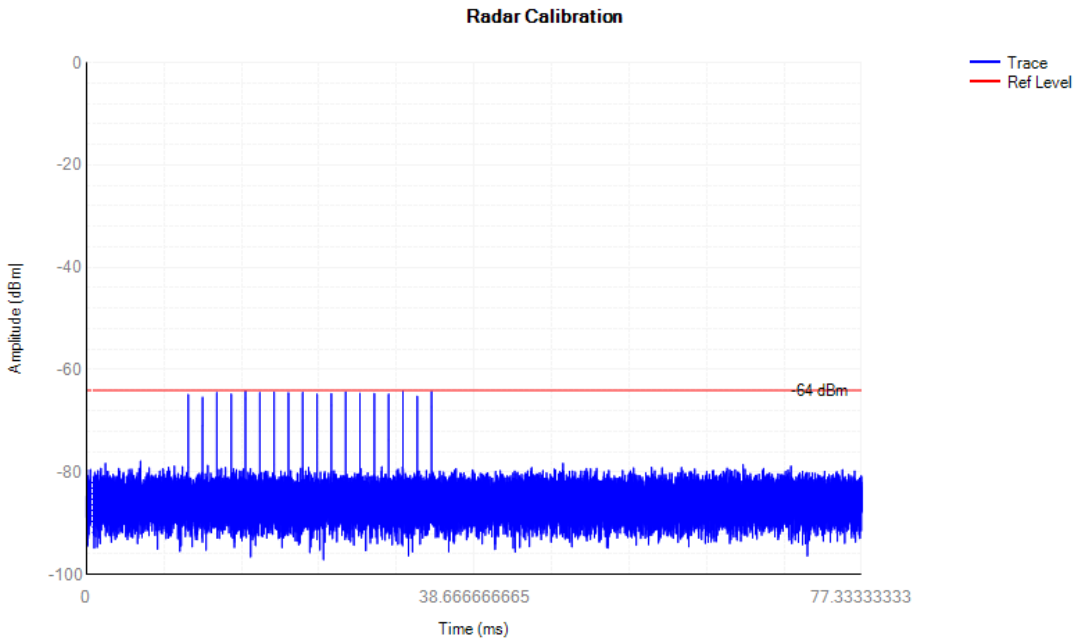

Radar Type 0

7.2 Channel Move Time and Channel Closing Transmission Time

ANT13:

5.3G

5290MHz

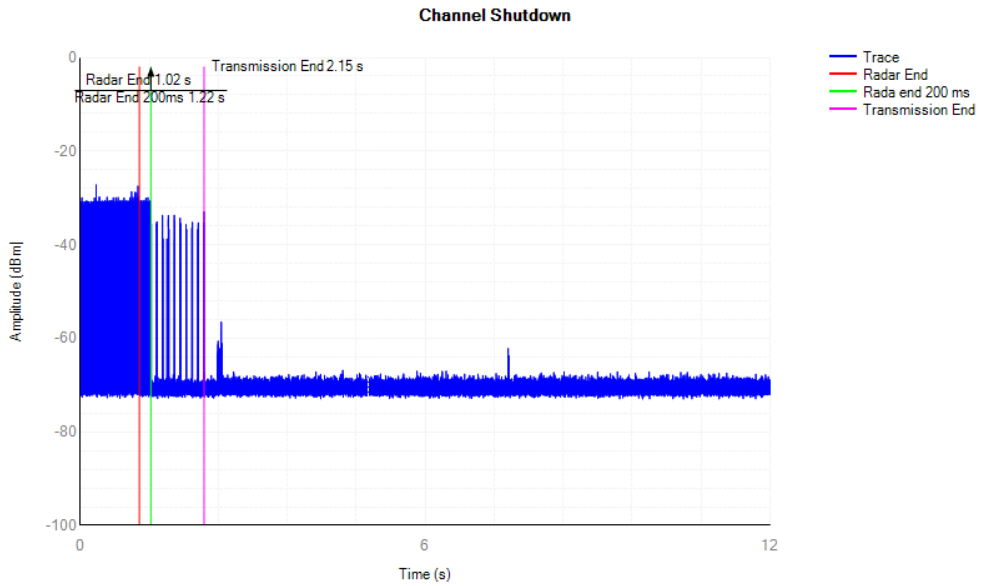

Test Items	Value	Limit
Channel Closing Transmission Time	0.1170 s	0.26 s
Channel Move Time	1.1273 s	10 s

5320MHz

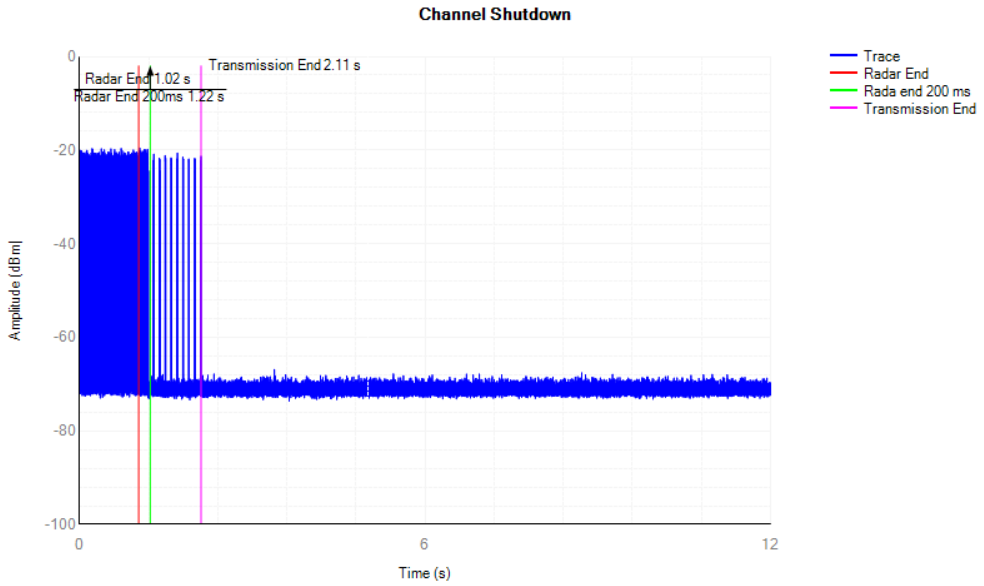

Test Items	Value	Limit
Channel Closing Transmission Time	0.1359 s	0.26 s
Channel Move Time	1.0826 s	10 s

5.6G

5600MHz

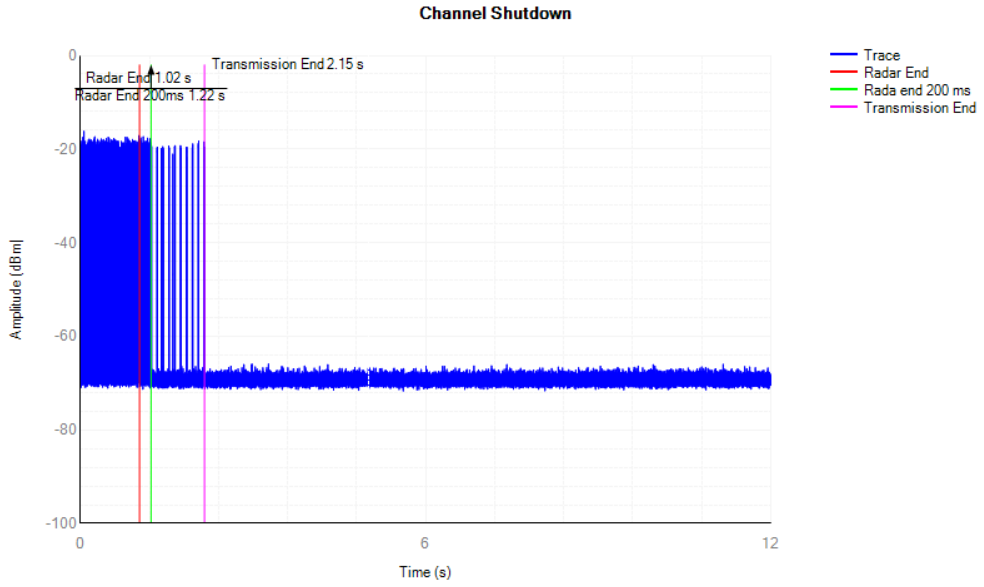

Test Items	Value	Limit
Channel Closing Transmission Time	0.1254 s	0.26 s
Channel Move Time	1.1306 s	10 s

5610MHz

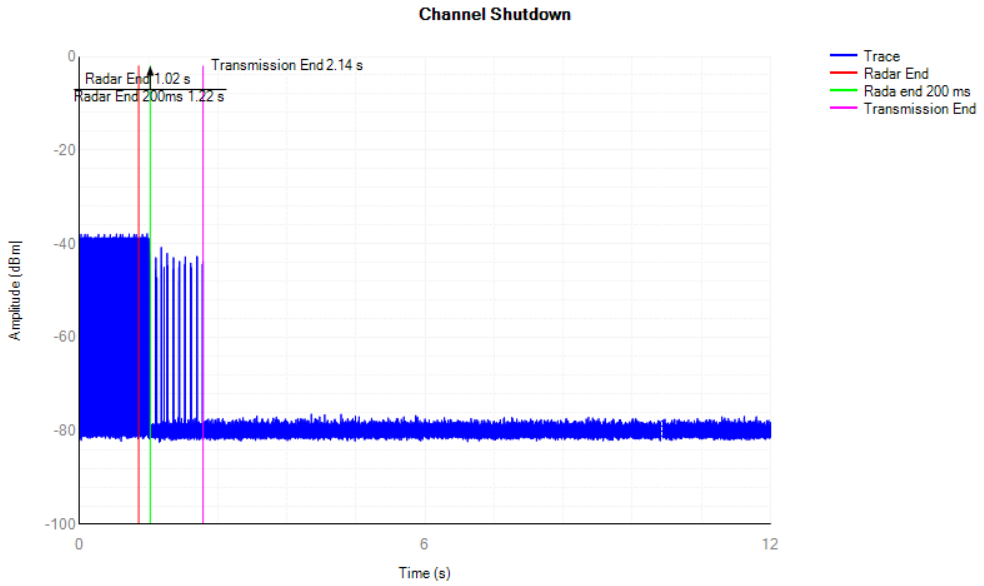

Test Items	Value	Limit
Channel Closing Transmission Time	0.1044 s	0.26 s
Channel Move Time	1.1174 s	10 s

ANT14:

5.3G

5290MHz

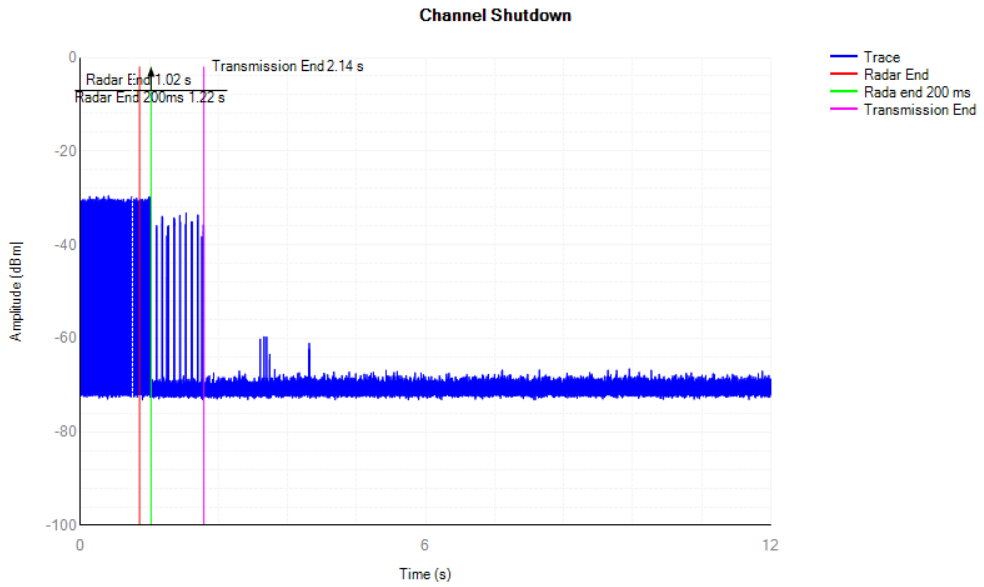

Test Items	Value	Limit
Channel Closing Transmission Time	0.1077 s	0.26 s
Channel Move Time	1.1174 s	10 s

5320MHz

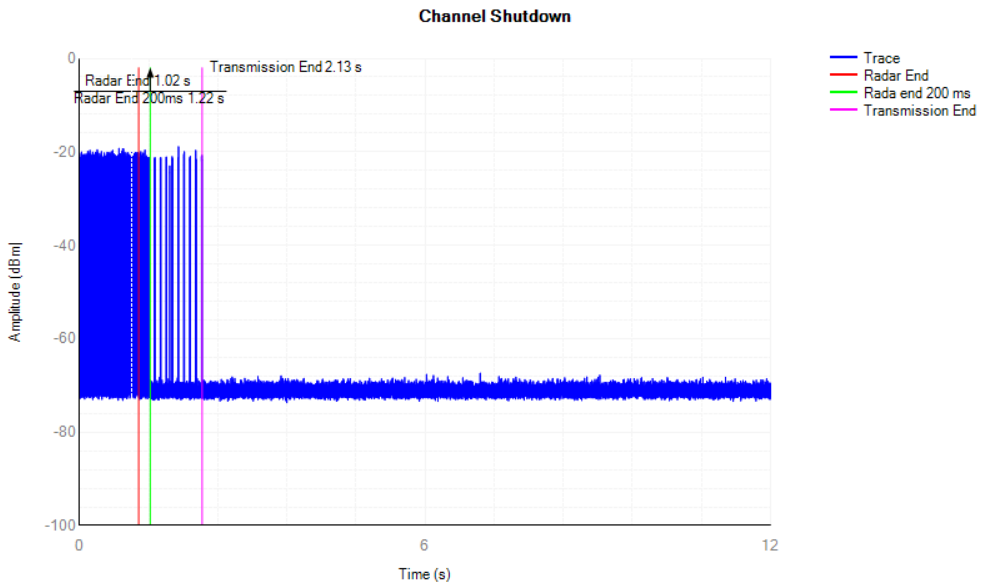

Test Items	Value	Limit
Channel Closing Transmission Time	0.1125 s	0.26 s
Channel Move Time	1.1009 s	10 s

5.6G

5600MHz

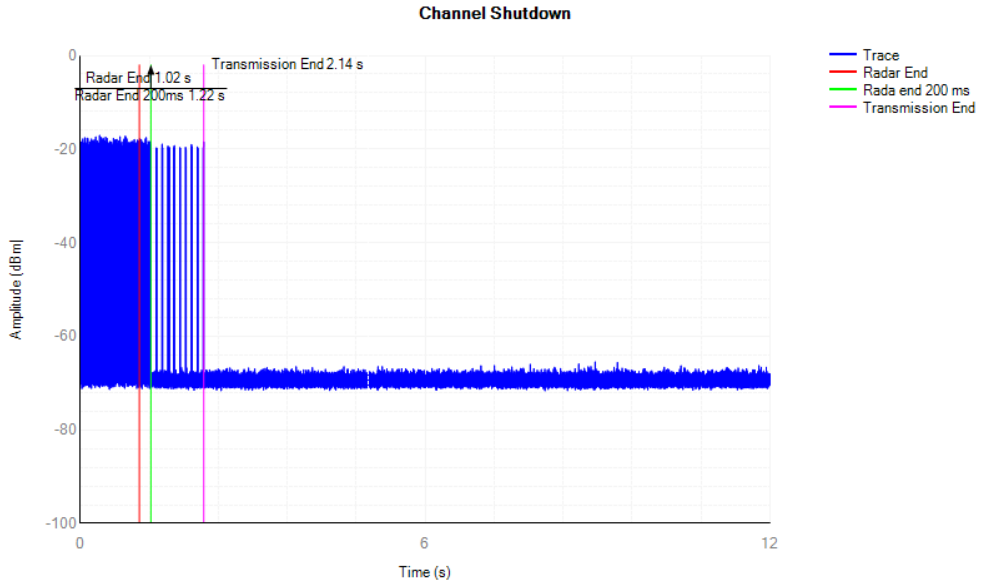

Test Items	Value	Limit
Channel Closing Transmission Time	0.1236 s	0.26 s
Channel Move Time	1.1204 s	10 s

5610MHz

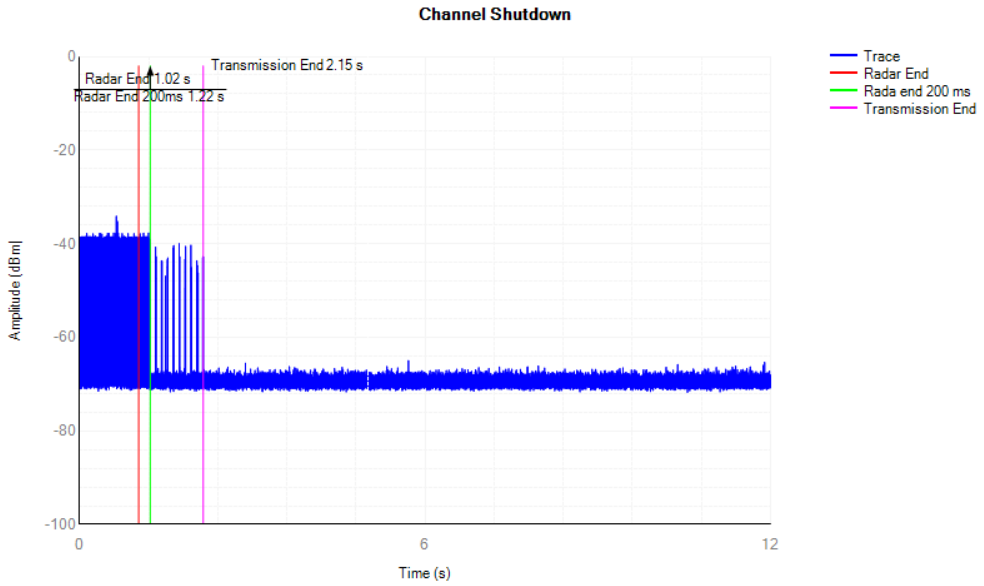

Test Items	Value	Limit
Channel Closing Transmission Time	0.1026 s	0.26 s
Channel Move Time	1.1207 s	10 s

Test Result: Pass

------ End of report ------