FCC WPT Compliance Test Report

For

INFINIX MOBILITY LIMITED

FLAT N 16/F BLOCK B UNIVERSAL INDUSTRIAL CENTRE 19-25 SHAN MEI STREET

FOTAN NT HONGKONG

Tested Model: XMC30

Test Engineer:	Cai Yongju Cai Yongju
Report Number:	WSCT-ANAB-R&E251200097A
Report Date:	24 December 2025
FCC ID:	2AIZN-XMC30
Check By:	Wei Liangmei Wei Liangmei
Approved By:	Li Huaibi Li Huaibi
Prepared By:	World Standardization Certification & Testing Group (Shenzhen) Co., Ltd. Building A-B,Baoli'an Industrial Park,No.58 and 60,Tangtou Avenue, Shiyan Street, Bao'an District, Shenzhen City, Guangdong Province, China Tel: +86-755-26996192 Fax: +86-755-86376605

World Standardization Certification & Testing Group (Shenzhen) Co., Ltd. WSCT

Table of contents

1 General information 3
1.1 Notes 3
1.2 Application details 3
1.3 EUT Information 4
2 Testing laboratory 5
3 ACCREDITATIONS 5
4 Test Environment 5
5 Applicant and Manufacturer 5
6 Test standards: 6
7 RF exposure limits 6
8 Measurement System 7
8.1 MAGPy Probe Information 7
8.2 Measurement procedure 9
8.3 System Description 10
8.4 System verification 16
9 Test results 17
9.1 Maximum Permissible Exposure Evaluation 17
9.2 Peak spatial-average SAR Result 18
10 Uncertainty 13
11 Test equipment and ancillaries used for tests 19

Modified History

REV.	Modification Description	Issued Date	Remark
REV.1.0	Initial Test Report Relesse	24 December 2025	Li Huaibi

1 General information

1.1 Notes

The test results of this test report relate exclusively to the test item specified in this test report. Shenzhen Timeway Testing Laboratories does not assume responsibility for any conclusions and generalisations drawn from the test results with regard to other specimens or samples of the type of the equipment represented by the test item. The test report is not to be reproduced or published in full without the prior written permission.

1.2 Application details

Date of receipt of test item:	2025-09-16
Start of test:	2025-09-17
End of test:	2025-10-28

1.3 EUT Information

Device Information:	
Product Type:	30W MAGNETIC WIRELESS FAST CHARGE BASE
Model:	XMC30
Trade Name:	Infinix
Device Type:	Portable device
Exposure Category:	uncontrolled environment / general population
Power Source:	Input: 5.0V⎓2A 9.0V⎓2A 14.0V⎓2.2A Output: 5W/7.5W/10W/30W

Antenna Type	Operation Frequency	Wireless Output	Maximum Coil operating current	Modulation Type
Coil	110-205 kHz	30Watts	2.2A	ASK
EUT Methods for Complying with Section §15.203 ☒Permanently attached antenna ☐Antennas using unique coupling with intentional radiators				

Note:1.The test results of this test report relate exclusively to the test item specified in this test report. World Standardization Certification & Testing Group (Shenzhen) Co.,Ltd does not assume responsibility for any conclusions and generalisations drawn from the test results with regard to other specimens or samples of the type of the equipment represented by the test item. The test report is not to be reproduced or published in full without the prior written permission.

2 Testing laboratory

Test Site	World Standardization Certification & Testing Group (Shenzhen) Co., Ltd.
Laboratory	Building A-B,Baoli'an Industrial Park,No.58 and 60,Tangtou Avenue, Shiyan Street, Bao'an District, Shenzhen City, Guangdong Province, China
Tel:	+86-755-26996192
Fax:	+86-755-86376605

3 ACCREDITATIONS

Our laboratories are accredited and approved by the following approval agencies according to ISO/IEC 17025:2017.

USA	**ANAB (Certificate Number: AT-3951)**
China	**CNAS (Registration Number: L3732)**
Canada	**ISED (CAB identifier:CN0178)**

Copies of granted accreditation certificates are available for downloading from our web site, http://www.wsct-cert.com

4 Test Environment

Otherwise required by the applicant or Product Regulations, Decision Rule in this report did not consider the uncertainty. The extended uncertainty given in this report is obtained by combining the standard uncertainty times the coverage factor K with the 95% confidence interval.

Parameter	Measurement Uncertainty
Temperature	±1℃
Humidity	±5%
H-field	1.33dB
E-field	1.89dB

5 Applicant and Manufacturer

Applicant/Client Name:	TECNO MOBILE LIMITED
Applicant Address:	FLAT N 16/F BLOCK B UNIVERSAL INDUSTRIAL CENTRE 19-25 SHAN MEI STREET FOTAN NT HONGKONG
Manufacturer Name:	TECNO MOBILE LIMITED
Manufacturer Address:	FLAT N 16/F BLOCK B UNIVERSAL INDUSTRIAL CENTRE 19-25 SHAN MEI STREET FOTAN NT HONGKONG

6 Test standards:

No.	Identity	Document Title
1	47 CFR Part 2.1093	Radiofrequency radiation exposure evaluation: portable devices
2	47 CFR Part 1.1310	Maximum Permissible Exposure
3	47 CFR Part 15 Subpart C	Radio Frequency Devices:Intentional Radiators

7 RF exposure limits

<Limit for peak spatial-average SAR>

Pursuant to §1.1310(c):

The SAR limits for general population/uncontrolled exposure are 0.08 W/kg, as averaged over the whole body, and a peak spatial-average SAR of 1.6 W/kg, averaged over any 1 gram of tissue (defined as a tissue volume in the shape of a cube). Exceptions are the parts of the human body treated as extremities, such as hands, wrists, feet, ankles, and pinnae, where the peak spatial-average SAR limit is 4 W/kg, averaged over any 10 grams of tissue (defined as a tissue volume in the shape of a cube). Exposure may be averaged over a time period not to exceed 30 minutes to determine compliance with general population/uncontrolled SAR limits.

<Limits for Maximum Permissible Exposure>

According to §1.1310 (d)(2)

For operations within the frequency range of 300 kHz and 6 GHz (inclusive), the limits for maximum permissible exposure (MPE), derived from whole-body SAR limits and listed in Table 1 in paragraph (e)(1) of this section, may be used instead of whole-body SAR limits as set forth in paragraphs (a) through (c) of this section to evaluate the environmental impact of human exposure to RF radiation as specified in § 1.1307(b) of this part, except for portable devices as defined in § 2.1093 of this chapter as these evaluations shall be performed according to the SAR provisions in § 2.1093.

Pursuant to §1.1310, systems operating under the provisions of this section shall be operated in a manner that in such a manner as to ensure that the public is not exposed to radio frequency energy levels in excess of the Commission guidelines

Frequency range (MHz)	Electric field strength (V/m)	Magnetic field strength (A/m)	Power density (mW/cm^2)	Averaging time (minutes)
(i) Limits for Occupational/Controlled Exposure				
0.3-3.0	614	1.63	*(100)	≤6
3.0-30	1842/f	4.89/f	*(900/f^2)	<6
30-300	61.4	0.163	1.0	<6
300-1,500			f/300	<6
1,500-100,000			5	<6
(ii) Limits for General Population/Uncontrolled Exposure				
0.3-1.34	614	1.63	*(100)	<30
1.34-30	824/f	2.19/f	*(180/f^2)	<30
30-300	27.5	0.073	0.2	<30
300-1,500			f/1500	<30
1,500-100,000			1.0	<30

f = frequency in MHz. * = Plane-wave equivalent power density

According to KDB 680106 D01 V04 clause 3.2

Accordingly, for § 2.1091-Mobile devices, the MPE limits between 100 kHz to 300 kHz are to be considered the same as those at 300 kHz in Table 1 of § 1.1310, that is, 614 V/m and 1.63 A/m, for the electric field and magnetic field, respectively. For § 2.1093-Portable devices below 4 MHz and down to 100 kHz, the MPE limits in § 1.1310 (with the 300 kHz limit applicable all the way down to 100 kHz) can be used for the purpose of equipment authorization in lieu of SAR evaluations.

8 Measurement System

8.1 MAGPy Probe Information

The MAGPy-8H3D+E3D V2 probe consists of eight isotropic H-field subprobes and one isotropic E-field subprobe that are all integrated inside the probe head with a flat tip. Each isotropic H-field subprobe is comprised of three concentric orthogonal loop coil sensors. The isotropic E-field subprobe is composed of three orthogonal sensors (x and y sensors are dipoles, and the sensor measuring the z component is a monopole). In total, the MAGPy-8H3D+E3D V2 probe contains 27 sensors that measure in the time domain. The specifications of the probe are provided in Table 2:

Probe design	
Probe head diameter	60 mm
H-field sub-probes	8 isotropic H-field sub-probes
	Concentric loops of 1 cm^2 arranged at the corners of a 22 mm cube[1]
E-field sub-probes	1 isotropic E-field sub-probe
	Orthogonal dipole/monopole (dipole length: 53 mm)
Temperature range	0–40 °C
Dimensions	110 mm×635 mm×35 mm (MAGPy-8H3D+E3D V2 & MAGPy-DAS V2)
H-field measurement specifications	
Frequency range	3 kHz–10 MHz
Dynamic range	0.1–3200 A/m (0.12 µT–4 mT)
E-field measurement specifications	
Frequency range	3 kHz–10 MHz
Dynamic range	0.08–2000 V/m

Table 2:MAGPy-8H3D+E3D V2 probe specifications

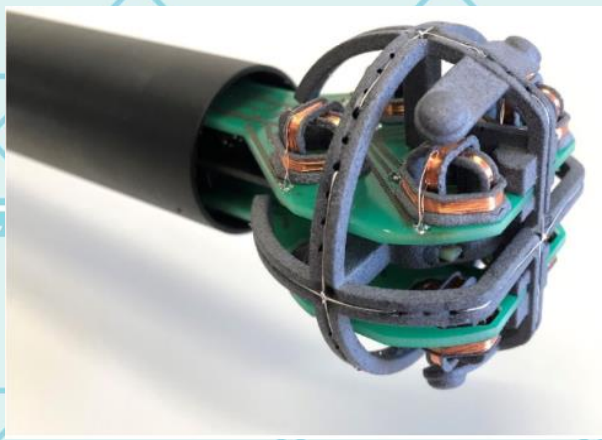

Left is the MAGPy-8H3D+E3D V2 probe with the probe-head cap removed, showing the eight isotropic H-field sub-probes and one isotropic E-field sub-probe

Right is MAGPy-RAφ V2 probe

The MAGPy-RAφ V2 probe is a pick-up coil that serves as a phase and amplitude reference,composed of a single loop with the specifications shown in Table 3.It is connected to the MAGPy-8H3D+E3D V2 probe and should be placed near the DUT during the volume scan to ensure a sufficient signal-to-noise ratio.

Frequency range	3 kHz–10 MHz
Dynamic range	0.1–3200 A/m (0.12 µT–4 mT)
Loop coil size	50 × 50 mm^2

Table 3:MAGPy-RAφ V2 probe specifications

Sensor specifications:H-field extrapolation uncertainty: 0.6 dB (k = 2)

8.2 Measurement procedure

Compliance testing according to Tier-4 of IEC PAS 63184:2021 is the most accurate method, ensuring no overestimation of the exposure. The workflow implemented in DASY6 Module WPT consists of the following steps:

1. Probe alignment
2. Teaching of the DUT position
3. 3D scan with automated grid optimization
4. Vector potential reconstruction (Sim4Life)
5. Solving the MQS equation in the muscle-simulating half-space phantom
6. Applying coverage factors (pre-determined by the IT'IS Foundation)
7. Advanced evaluations in various posed Sim4Life ViP phantoms.

Place the EUT on the test bench to stimulate the wireless charging mode, manually adjust the initial position of the probe to the highest center point of the EUT horizontal plane, the distance between a piece of A4 paper, set up the parameters in the WPT software to test

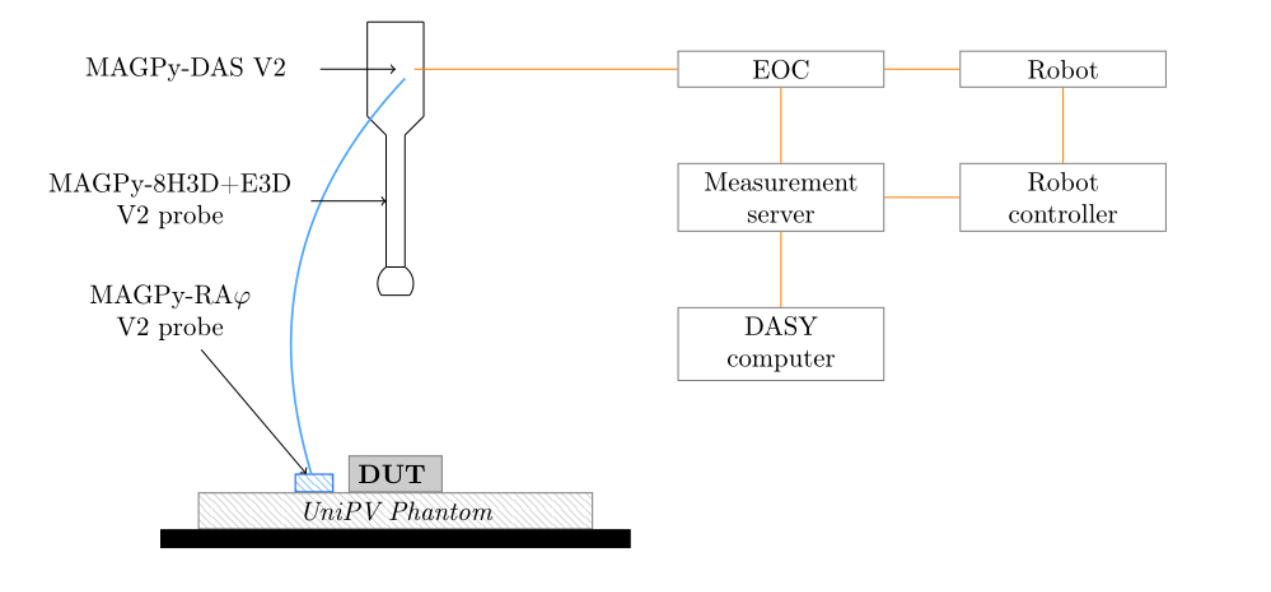

8.3 System Description

General

1.DASY6 Module WPT V2.6+ is based on the MAGPy Version 2 technology integrated in DASY6 product line for high-precision robot-based evaluations of wireless power transfer (WPT) devices. It is the only system for fully automated compliance testing according to all international standards and national regulations.The precision is achieved by combining the MAGPy system with the DASY robotics system and Sim4Life simulation platform. Maxwell total field reconstruction is employed.

2. The DASY6 Module WPT V2.6+ system ensures that the entire emitted field of the DUT is measured and used to reconstruct the peak spatial 1-gram-averaged SAR (psSAR1g) in the standardized phantom at the location taught by the user. The phantom is filled with the tissue simulating liquid (σ = 0.75 S/m, εr = 55, ρ = 1000 kg/m3) and approximates the half-space above the DUT. The phantom setup complies with FCC/ISED regulations and the latest draft of IEC 63184, and cannot be altered by the user. If the criteria of the field extent are not met, the system provides warning information (e.g., boundary effect warning) to the user in the report generated automatically.

3. The homogeneous phantom used by DASY6 Module WPT V2.6+ is equivalent to a half-space phantom on top of the DUT. Therefore, the system guarantees that the worst-case illumination conditions are captured. In line with KDB 680106, DASY6 Module WPT V2.6+ computes the E/H ratio based on the E- and H-fields measured with the MAGPy V2 probe and reports it as one indicator to determine if the DUT is producing a magnetic dominant near field. Additionally, DASY6 Module WPT V2.6+ estimates the SAR induced by the incident E-field and hence enables checking if the exposure due to the incident E-field can be neglected.

4. DASY6 Module WPT V2.6+ does not require modeling of the DUT, since it uses the measured 3D H-fields (amplitude and phase) to represent the DUT. The system supports the determination of SAR in the frequency range from 3 kHz to 4 MHz, in which the Magneto Quasi-Static (MQS) conditions are safely met. It provides the total exposure ratio to count in the exposures due to the harmonics which are not negligible.

5. DASY8 Module WPT V2.6+ uses the validated MQS solver of Sim4Life to determine psSAR1g up to 4 MHz. Since the MQS solver is a frequency domain solver, it has no time step. It uses a uniform 1 mm resolution across x, y, and z axes and a computation domain surrounding the whole volume scanned. The associated uncertainties for these two numerical parameters (i.e., resolution and computation domain size) are ≤0.1 dB (k = 2).

Compliance Evaluation

The MAGPy-8H3D+E3D V2 probe with MAGPy-DAS V2 is mounted on a TX2-90XL robot, allowing for scans of volumes as large as 2000 × 1000 × 1500mm 3 with a precision of ±0.2mm. The H-field distributions can be analyzed directly, and the values are compared to the reference level, or they are converted into Maxwell field and used as excitations for determining the basic restriction quantities for further dosimetric analysis with the Magneto Quasi-Static (MQS) solver

DASY6 Module WPT SW version V2.6+ offers compliance evaluation with respect to:

• Reference levels on the basis of the incident H- and E-fields measured from the volume scan

• Basic restrictions on the basis of the peak induced E-field, peak induced current density, and peak spatial-average SAR calculated from the Sim4Life simulation.

Since SPEAG release a DASY6 Module WPT system (SW Module WPT V2.6+) for E and H-Field measurement, and also the system support Sim4Life plug-in includes the components to import the 3D H-fild scan data (Hx, Hy, Hz values in the measurement volume) to the Sim4Life simulation platform. And a magneto quasi-static (MQS) simulation is automatically setup to solve for a lossy halfspace Phantom setup. The lossy half-space has muscle tissue dielectric properties (σ = 0.75 S/m, ρ = 1000 kg/m3,), The induced electric (E-) fields and **specific absorption rate (SAR)** are assessed with Sim4Life's Quasi-Static EM Solver (P-EM-QS) using only the measured data.

The post-processing engine determines the maximum induced E-field, current density, and SAR values in a homogeneous half-space of muscle tissue equivalent media (half-space muscle phantom) positioned at the compliance distance. In general, the compliance distance corresponds to the closest point (with respect to the exposure source) the human body (e.g., a part of the hand) can reach during the operation of the source.

The relative dielectric constant, conductivity, and mass density of the homogeneous phantom used in the simulations were 55, 0.75 S/m, and 1000 kg/m3 respectively, which correspond to the phantom.

Simulation Results

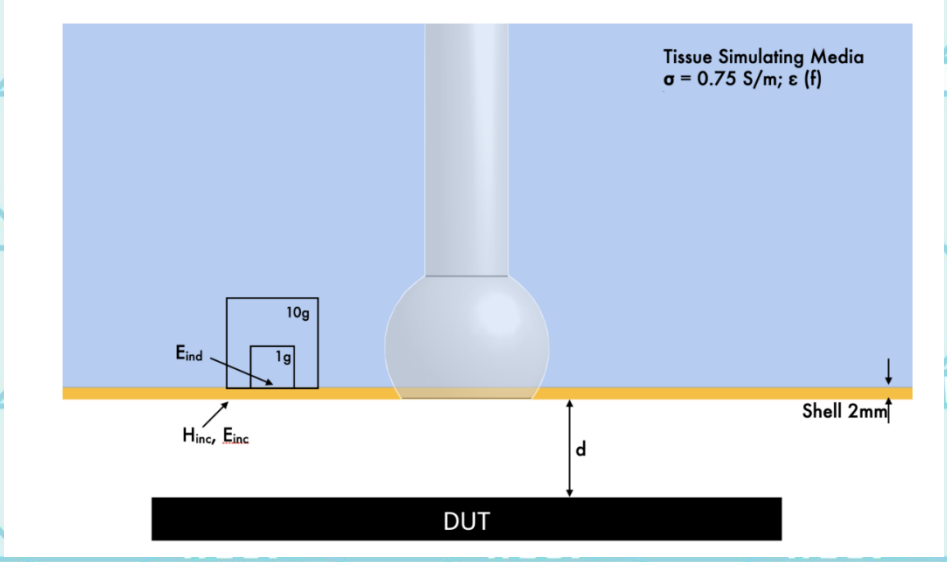

Distance used in the tables for simulation and compliance evaluation results is defined as the spacing between the top surface of the DUT and the bottom surface of the fictive phantom shell (with a thickness of 2mm). In this case, the evaluation is made at distance d. Typically d = 0, i.e., at the DUT surface. The evaluation locations of the incident fields (i.e., H inc and E inc) as well as the induced fields (e.g., E ind , psSAR1g, and psSAR10g) are also illustrated.

The following figure shows the system.

9 Uncertainty

The following uncertainties are provided and confirmed by SPEAG

DASY8 Uncertainty Budget for Peak Incident *H*-field according to IEC/IEEE 63184						
Item	Error Description	Unc. Value (±dB)	Probab. Distr.	Div.	(c_i)	Std. Unc. (±dB)
Measurement system						
1	Amplitude calibration uncertainty	0.35	N	1	1	0.35
2	Probe anisotropy	0.6	R	$\sqrt{3}$	1	0.35
3	Probe dynamic linearity	0.2	R	$\sqrt{3}$	1	0.12
4	Probe frequency domain response	0.3	R	$\sqrt{3}$	1	0.17
5	Probe frequency linear interp. fit	0.15	R	$\sqrt{3}$	1	0.09
6	Spatial averaging	0.1	R	$\sqrt{3}$	1	0.06
7	Parasitic E-field sensitivity	0.1	R	$\sqrt{3}$	1	0.06
8	Detection limit	0.15	R	$\sqrt{3}$	1	0.09
9	Readout electronics	0	N	1	1	0
10	Probe positioning	0.19	N	1	1	0.19
11	Repeatability	0.1	N	1	1	0.10
12	Surface field reconstruction	0.3	N	1	1	0.3
Combined uncertainty (k = 1)						0.67
Expanded uncertainty (k = 2)						**1.33 (16.6%)**

DASY8 Uncertainty Budget for Incident *E*-field according to IEC/IEEE 63184						
Item	Error Description	Unc. Value (±dB)	Probab. Distr.	Div.	(c_i)	Std. Unc. (±dB)
Measurement system						
1	Amplitude calibration uncertainty	0.53	N	1	1	0.53
2	Probe anisotropy	0.8	R	$\sqrt{3}$	1	0.46
3	Probe dynamic linearity	1	R	$\sqrt{3}$	1	0.58
4	Probe frequency domain response	0.3	R	$\sqrt{3}$	1	0.17
5	Probe frequency linear interp. fit	0.15	R	$\sqrt{3}$	1	0.09
6	Parasitic H-field sensitivity	0.2	R	$\sqrt{3}$	1	0.12
7	Detection limit	0.15	R	$\sqrt{3}$	1	0.09
8	Readout electronics	0	N	1	1	0
9	Repeatability	0.1	N	1	1	0.10
Combined uncertainty (k = 1)						0.95
Expanded uncertainty (k = 2)						**1.89 (24.4%)**

DASY8 Uncertainty Budget for psSAR1g according to IEC/IEEE 63184						
Item	Error Description	Unc. Value (±dB)	Probab. Distr.	Div.	(c_i)	Std. Unc. (±dB)
Measurement system						
1	Amplitude calibration uncertainty	0.35	N	1	1	0.35
2	Probe anisotropy	0.6	R	$\sqrt{3}$	1	0.35
3	Probe dynamic linearity	0.2	R	$\sqrt{3}$	1	0.12
4	Probe frequency domain response	0.3	R	$\sqrt{3}$	1	0.17
5	Probe frequency linear interp. fit	0.15	R	$\sqrt{3}$	1	0.09
6	Spatial averaging	0.1	R	$\sqrt{3}$	1	0.06
7	Parasitic *E*-field sensitivity	0.1	R	$\sqrt{3}$	1	0.06
8	Detection limit	0.15	R	$\sqrt{3}$	1	0.09
9	Readout electronics	0	N	1	1	0
10	Probe positioning	0.19	N	1	1	0.19
11	Repeatability	0.1	N	1	1	0.1
12	Surface field reconstruction	0.2	N	1	1	0.2
Numerical simulations						
13	Grid resolution	0.02	R	$\sqrt{3}$	1	0.01
14	Tissue parameters	0	R	$\sqrt{3}$	1	0
15	Exposure position	0	R	$\sqrt{3}$	1	0
16	Source representation	0.09	N	1	1	0.09
17	Convergence and power budget	0	R	$\sqrt{3}$	1	0
18	Boundary conditions	0.1	R	$\sqrt{3}$	1	0.06
19	Phantom loading/backscattering	0.1	R	$\sqrt{3}$	1	0.06
Combined uncertainty (k = 1)						0.63
Expanded uncertainty (k = 2)						**1.27 (33.9%)**

DASY8 Uncertainty Budget for psSAR10 g according to IEC/IEEE 63184						
Item	Error Description	Unc. Value (±dB)	Probab. Distr.	Div.	(c_i)	Std. Unc. (±dB)
Measurement system						
1	Amplitude calibration uncertainty	0.35	N	1	1	0.35
2	Probe anisotropy	0.6	R	$\sqrt{3}$	1	0.35
3	Probe dynamic linearity	0.2	R	$\sqrt{3}$	1	0.12
4	Probe frequency domain response	0.3	R	$\sqrt{3}$	1	0.17
5	Probe frequency linear interp. fit	0.15	R	$\sqrt{3}$	1	0.09
6	Spatial averaging	0.1	R	$\sqrt{3}$	1	0.06
7	Parasitic *E*-field sensitivity	0.1	R	$\sqrt{3}$	1	0.06
8	Detection limit	0.15	R	$\sqrt{3}$	1	0.09
9	Readout electronics	0	N	1	1	0
10	Probe positioning	0.19	N	1	1	0.19
11	Repeatability	0.1	N	1	1	0.1
12	Surface field reconstruction	0.2	N	1	1	0.2
Numerical simulations						
13	Grid resolution	0	R	$\sqrt{3}$	1	0
14	Tissue parameters	0	R	$\sqrt{3}$	1	0
15	Exposure position	0	R	$\sqrt{3}$	1	0
16	Source representation	0.04	N	1	1	0.04
17	Convergence and power budget	0	R	$\sqrt{3}$	1	0
18	Boundary conditions	0.1	R	$\sqrt{3}$	1	0.06
19	Phantom loading/backscattering	0.1	R	$\sqrt{3}$	1	0.06
Combined uncertainty (k = 1)						0.63
Expanded uncertainty (k = 2)						**1.25 (33.4%)**

9.1 System verification

Below table shows the target value and measured value after normalized to 1A and comparing to the Target value provided by SPEAG calibration, the verification data should be within its specification of 1.33dB(16.6%,k=2)

Test Date	Calibrated Parameters (kHz)	Distance (mm)	Target H-field (A/m)	Measurement H-field(A/m)	Drift
2025.01.22	3	2	150	153	2.00%
2024.11.01	85	2	189	200	5.82%
2025.01.18	400	2	249	232	6.83%

10 Test results

Note:

1.It is necessary to analyze the synchronous transmission during the reverse charging operation of the equipment and the operation of other transmitters. Considering that the maximum applicable analog SAR value for reverse charging of the equipment is less than 0.001, the influence can be disregarded.

2. The Peak incident field result were via extrapolation to estimation of fields at 0mm separation distance based on,measurements near the surface; Maxwell total field reconstruction is employed.

10.1 Maximum Permissible Exposure Evaluation

E-Field Result

Position	Test Distance (mm)	Measured Peak incident field_Einc (V/m)	Limit (V/M)	Result
Front side	0	552	614	Pass
Rear side	0	297	614	Pass
Left side	0	237	614	Pass
Right side	0	286	614	Pass
Top side	0	202	614	Pass
Bottom side	0	183	614	Pass

H-Field Result

Position	Test Distance (mm)	Estimated Peak incident field_Hinc (H/m)	Limit (A/M)	Result
Front side	0	1.00	1.63	Pass
Rear side	0	5.31	1.63	Exceeded
Left side	0	1.29	1.63	Pass
Right side	0	2.88	1.63	Exceeded
Top side	0	4.05	1.63	Exceeded
Bottom side	0	1.75	1.63	Exceeded

An assessment against the Limit for peak spatial-average SAR shall be performed for the EUT when the Limits for Maximum Permissible Exposure are exceeded.

10.2 Peak spatial-average SAR Result

Position	Test Distance (mm)	Measured 1g avg. (W/kg)	1g Limit (W/kg)	Result
Rear side	0	0.001	1.63	Pass
Right side	0	0.000174	1.63	Pass
Top side	0	0.00033	1.63	Pass
Bottom side	0	0.0000612	1.63	Pass

Measured 1g avg $=1.00e^{-3}=1.00*10^{-3}=0.001$
Note: In scientific computing, e as the base is 10 and the exponent is -3.
The worst-case data have been reported, and no other electromagnetic field data exceeding the listedemission values above the table have been reported.

Conclusion:
Based on SPEAG DASY6 Module WPT-MAGPY system, a magneto quasi-static (MQS) simulation is automatically setup to solve for a lossy halfspace Phantom setup. The lossy half-space has muscle tissue dielectric properties (σ = 0.75 S/m, ρ = 1000 kg/m3,), The induced electric (E-) fields and specific absorption rate (SAR) are assessed with Sim4Life's Quasi-Static EM Solver (P-EM-QS) that the the product is compliance with Peak spatial-average SAR Result < 1.6W/kg.

11 Test equipment and ancillaries used for tests

To simplify the identification of the test equipment and/or ancillaries which were used, the reporting of the relevant test cases only refer to the test item number as specified in the table below.

Manufacturer	Device Type	Type(Model)	Serial number	calibration	
				Last Cal.	Due Date
SPEAG	Probe	MAGPY-8H3D+E3DV2	3087	2024.11.01	2025.10.31
SPEAG	V&V Source	V-Coil500/3V2	1028	2024.11.13	2027.11.14
SPEAG	V&V Source	V-Coil50/400V2	1034	2024.10.31	2027.11.01
SPEAG	V&V Source	V-Coil350/85V2	1035	2024.11.06	2027.11.07

Note: V&V:verification & validation

Test photos to see XMC30_ test setup photos file