TEST REPORT

Product Name : quadcopter

Model Number : D70, D70S, D70E, D70R, D70G, D60, D60S, D60E, D60G, HS120S, HS270D, HS270S, F7, D65, D75, D80, D85, D90, D11, D33, D100, D200, HT40, HT50, HT60, HT65, HT70, HT300, HS290, HS320, HS390, HS410, HS460, HS480, HS490, HS520, HS530, HS540, HS560, HS570, HS580, HS590, HS610, HS620, HS630, HS640, HS650, HS660, HS670, HS680, HS690, HS730, HS740, HS750, HS760, HS770, HS780, HS790, HS810, HS820, HS900, HS176, HS101, HS155, HS176, D89, DC10, DC11, DC12, HS210F, JY08, JY03, JY01, 1812, Z6pro

FCC ID : 2AJ55HOLYSTONED7

Prepared for : Xiamen Huoshiquan Import & Export CO., LTD
Address : Unit 1, Room 501, Hongxiang Building, No.258 Hubin Nan Road, Siming District, Xiamen, China

Prepared by : EMTEK (SHENZHEN) CO., LTD.
Address : Building 69, Majialong Industry Zone, Nanshan District, Shenzhen, Guangdong, China

Tel: (0755) 26954280
Fax: (0755) 26954282

Report Number : ENS2212130001W00201R
Date(s) of Tests : December 13, 2022 to January 3, 2023
Date of issue : January 3, 2023

Table of Contents

1 TEST RESULT CERTIFICATION 3

2 EUT TECHNICAL DESCRIPTION 4

3 SUMMARY OF TEST RESULT 5

4 TEST METHODOLOGY 6

4.1 GENERAL DESCRIPTION OF APPLIED STANDARDS 6
4.2 MEASUREMENT EQUIPMENT USED 6
4.3 DESCRIPTION OF TEST MODES 8

5 FACILITIES AND ACCREDITATIONS 9

5.1 FACILITIES 9
5.2 LABORATORY ACCREDITATIONS AND LISTINGS 9

6 TEST SYSTEM UNCERTAINTY 10

7 SETUP OF EQUIPMENT UNDER TEST 11

7.1 RADIO FREQUENCY TEST SETUP 1 11
7.2 RADIO FREQUENCY TEST SETUP 2 11
7.3 CONDUCTED EMISSION TEST SETUP 13
7.4 SUPPORT EQUIPMENT 13

8 TEST REQUIREMENTS 14

8.1 BANDWIDTH TEST 14
8.2 RADIATED SPURIOUS EMISSION 17
8.3 CONDUCTED EMISSIONS TEST 29
8.4 ANTENNA APPLICATION 30

1 TEST RESULT CERTIFICATION

Applicant	:	Xiamen Huoshiquan Import & Export CO., LTD
Address	:	Unit 1, Room 501, Hongxiang Building, No.258 Hubin Nan Road, Siming District, Xiamen, China
Manufacturer	:	Xiamen Huoshiquan Import & Export CO., LTD
Address	:	Unit 1, Room 501, Hongxiang Building, No.258 Hubin Nan Road, Siming District, Xiamen, China
EUT	:	quadcopter
Model Name	:	D70, D70S, D70E, D70R, D70G, D60, D60S, D60E, D60G, HS120S, HS270D, HS270S, F7, D65, D75, D80, D85, D90, D11, D33, D100, D200, HT40, HT50, HT60, HT65, HT70, HT300, HS290, HS320, HS390, HS410, HS460, HS480, HS490, HS520, HS530, HS540, HS560, HS570, HS580, HS590, HS610, HS620, HS630, HS640, HS650, HS660, HS670, HS680, HS690, HS730, HS740, HS750, HS760, HS770, HS780, HS790, HS810, HS820, HS900, HS176, HS101, HS155, HS176, D89, DC10, DC11, DC12, HS210F, JY08, JY03, JY01, 1812, Z6pro
Trademark	:	Holy Stone

Measurement Procedure Used:

APPLICABLE STANDARDS	
STANDARD	**TEST RESULT**
FCC 47 CFR Part 2, Subpart J FCC 47 CFR Part 15, Subpart C	**PASS**

The above equipment was tested by EMTEK(SHENZHEN) CO., LTD. The test data, data evaluation, test procedures, and equipment configurations shown in this report were made in accordance with the procedures given in ANSI C63.10 (2013) and the energy emitted by the sample EUT tested as described in this report is in compliance with the requirements of FCC Rules Part 2 and Part 15.249

The test results of this report relate only to the tested sample identified in this report

Date of Test : December 13, 2022 to January 3, 2023

Prepared by : Luo peiye /Editor

Reviewer : Joe Xia/Supervisor

Approve & Authorized Signer : Lisa Wang/Manager

EMTEK (SHENZHEN) CO., LTD. TESTING

2 EUT TECHNICAL DESCRIPTION

Product:	quadcopter
Model Number:	D70, D70S, D70E, D70R, D70G, D60, D60S, D60E, D60G, HS120S, HS270D, HS270S, F7, D65, D75, D80, D85, D90, D11, D33, D100, D200, HT40, HT50, HT60, HT65, HT70, HT300, HS290, HS320, HS390, HS410, HS460, HS480, HS490, HS520, HS530, HS540, HS560, HS570, HS580, HS590, HS610, HS620, HS630, HS640, HS650, HS660, HS670, HS680, HS690, HS730, HS740, HS750, HS760, HS770, HS780, HS790, HS810, HS820, HS900, HS176, HS101, HS155, HS176, D89, DC10, DC11, DC12, HS210F, JY08, JY03, JY01, 1812, Z6pro (These models are identical in circuitry and electrical, mechanical and physical construction; The differences among them are model name and the color of appearance. Only indicates for different market purposes; We chose D70 as the final test prototype)
Power Supply	DC 4.5V from battery(3x1.5V AAA)
Modulation:	GFSK
Frequency Range:	2460 MHz to 2478 MHz
Number of Channels:	37 Channels
Max Transmit Power:	83.98 dBuV/m@3m
Antenna Gain:	2.97dBi
Antenna:	Brass Antenna
Temperature Range:	0°C ~ +40°C

Note: for more details, please refer to the User's manual of the EUT.

3 SUMMARY OF TEST RESULT

FCC Part Clause	Test Parameter	Verdict	Remark
15.207	Conducted Emission	N/A	
15.209	Radiated Emission	PASS	
15.249	Radiated Spurious Emission	PASS	
15.249	Band edge test	PASS	
15.249	20dB Bandwidth	PASS	
15.203	Antenna Requirement	PASS	
NOTE1: N/A (Not Applicable) NOTE2: The report use radiated measurements in the restricted frequency bands. In addition, the radiated test is also performed to ensure the emissions emanating from the device cabinet also comply with the applicable limits.			

RELATED SUBMITTAL(S) / GRANT(S):

This submittal(s) (test report) is intended for FCC ID:2AJ55HOLYSTONED7 filing to comply with Section 15.249 of the FCC Part 15, Subpart C Rules.

4 TEST METHODOLOGY

4.1 GENERAL DESCRIPTION OF APPLIED STANDARDS

According to its specifications, the EUT must comply with the requirements of the following standards:
FCC 47 CFR Part 2, Subpart J
FCC 47 CFR Part 15, Subpart C

4.2 MEASUREMENT EQUIPMENT USED

4.2.1 Conducted Emission Test Equipment

Equipment	Manufacturer	Model No.	Serial No.	Last Cal.	Cal. Interval
EMI Test Receiver	Rohde & Schwarz	ESCI	101384	2022/5/14	1Year
AMN	Rohde & Schwarz	ENV216	101161	2022/5/14	1Year
AMN	Kyoritsu	KNW-407	8-1492-9	2022/5/15	1Year

4.2.2 Radiated Emission Test Equipment

Equipment	Manufacturer	Model No.	Serial No.	Last Cal.	Cal. Interval
Pre-Amplifier	HP	8447F	2944A07999	2022/5/14	1Year
EMI Test Receiver	Rohde & Schwarz	ESCI	101414	2022/5/14	1Year
Bilog Antenna	Schwarzbeck	VULB9163	712	2022/7/5	2 Year
Horn antenna	Schwarzbeck	BBHA9120D	9120D-1178	2022/7/4	2 Year
Pre-Amplifie	Lunar EM	LNA1G18-48	J1011131010001	2022/5/15	1Year
Spectrum Analyzer	Rohde & Schwarz	FSV40	100967	2022/5/14	1Year
Horn antenna	Schwarzbeck	BBHA9170	9170-399	2022/6/12	2 Year
Loop Antenna	Schwarzbeck	FMZB1519	1519-012	2021/6/12	2 Year
Cable	H+B	NmSm-05-C15052	N/A	2022/5/15	1 Year
Cable	H+B	NmSm-2-C15201	N/A	2022/5/15	1 Year
Cable	H+B	NmNm-7-C15702	N/A	2022/5/15	1 Year
Cable	H+B	SAC-40G-1	414	2022/5/15	1 Year
Cable	H+B	SUCOFLEX104	MY14871/4	2022/5/15	1 Year
Cable	H+B	BLU18A-NmSm-6500	D8501	2022/5/15	1 Year
Band reject Filter(50dB)	WI/DE	WRCGV-2400(2400-2485MHz)	2	2022/5/15	1 Year

4.2.3 Radio Frequency Test Equipment

Equipment	Manufacturer	Model No.	Serial No.	Last Cal.	Cal. Interval
Signal Analyzer	Agilent	N9010A	MY53470879	2022/5/14	1Year
Vector Signal Generater	Agilent	N5182B	MY53050878	2022/5/14	1Year
Analog Signal Generator	Agilent	N5171B	MY53050553	2022/5/14	1Year
Power Meter	Agilent	PS-X10-100	\	2022/5/15	1Year

Blocking Box	THEDA	AD211	TW5451140	2022/5/14	1Year
Switchgroup	THEDA	ETF-025(VASC6)	TW5451008	N/A	N/A
MIMO Matrix Switch	THEDA	4P5TM18	TW5451009	N/A	N/A
Temperature&Humidity Chamber	ESPEC	EL-02KA	12107166	2022/7/3	1 Year

4.3 DESCRIPTION OF TEST MODES

The EUT has been tested under its typical operating condition.
The EUT configuration for testing is installed on RF field strength measurement to meet the Commissions requirement and operating in a manner which intends to maximize its emission characteristics in a continuous normal application.
The Transmitter was operated in the normal operating mode. The TX frequency was fixed which was for the purpose of the measurements.

Test of channel included the lowest and middle and highest frequency to perform the test, then record on this report.

The EUT has been tested under its typical operating condition so those modulation and channel were used for all test.

Pre-defined engineering program for regulatory testing used to control the EUT for staying in continuous transmitting and receiving mode is programmed.

Frequency and Channel list:

Channel	Frequency (MHz)	Channel	Frequency (MHz)	Channel	Frequency (MHz)
1	2460	9	2468	…	…
2	2461	10	2469	17	2476
3	2463	11	2470	18	2477
…	…	…	…	19	2478
Note: fc=2460MHz+(k-1)×1MHz k=1 to 19					

Test Frequency and Channel list:

Lowest Frequency		Middle Frequency		Highest Frequency	
Channel	Frequency (MHz)	Channel	Frequency (MHz)	Channel	Frequency (MHz)
1	2460	10	2469	19	2478

5 FACILITIES AND ACCREDITATIONS

5.1 FACILITIES

All measurement facilities used to collect the measurement data are located at

Bldg 69, Majialong Industry Zone District, Nanshan District, Shenzhen, China
The sites are constructed in conformance with the requirements of ANSI C63.7, ANSI C63.10 and CISPR Publication 22.

5.2 LABORATORY ACCREDITATIONS AND LISTINGS

Site Description

EMC Lab.	:	**Accredited by CNAS** The Certificate Registration Number is L2291. The Laboratory has been assessed and proved to be in compliance with CNAS-CL01 (identical to ISO/IEC 17025:2017) **Accredited by FCC** Designation Number: CN1204 Test Firm Registration Number: 882943 **Accredited by A2LA** The Certificate Number is 4321.01. **Accredited by Industry Canada** The Conformity Assessment Body Identifier is CN0008
Name of Firm	:	EMTEK (SHENZHEN) CO., LTD.
Site Location	:	Building 69, Majialong Industry Zone, Nanshan District, Shenzhen, Guangdong, China

6 TEST SYSTEM UNCERTAINTY

The following measurement uncertainty levels have been estimated for tests performed on the apparatus:

Parameter	Uncertainty
Radio Frequency	±1x10^-5
Maximum Peak Output Power Test	±1.0dB
Conducted Emissions Test	±2.0dB
Radiated Emission Test	±2.0dB
Occupied Bandwidth Test	±1.0dB
Band Edge Test	±3dB
All emission, radiated	±3dB
Antenna Port Emission	±3dB
Temperature	±0.5℃
Humidity	±3%

Measurement Uncertainty for a level of Confidence of 95%

7 SETUP OF EQUIPMENT UNDER TEST

7.1 RADIO FREQUENCY TEST SETUP 1

The EUT wireless component's antenna ports(s) of the EUT are connected to the measurement instrument per an appropriate attenuator. The EUT is controlled by PC/software to emit the specified signals for the purpose of measurements.

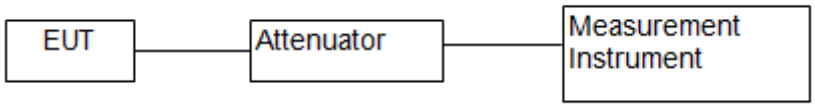

7.2 RADIO FREQUENCY TEST SETUP 2

The test site semi-anechoic chamber has met the requirement of NSA tolerance 4 dB according to the standards: ANSI C63.10. The test distance is 3m.The setup is according to the requirements in Section 13.1.4.1 of ANSI C63.10-2013 and CAN/CSA-CEI/IEC CISPR 22.

Below 30MHz：

The EUT is placed on a turntable 0.8 meters above the ground in the chamber, 3 meter away from the antenna (loop antenna). The Antenna should be positioned with its plane vertical at the specified distance from the EUT and rotated about its vertical axis for maximum response at each azimuth about the EUT. The center of the loop shall be 1 m above the ground. For certain applications, the loop antenna plane may also need to be positioned horizontally at the specified distance from the EUT.

30MHz-1GHz：

The EUT is placed on a turntable 0.8 meters above the ground in the chamber, 3 meter away from the antenna. The maximal emission value is acquired by adjusting the antenna height, polarisation and turntable azimuth. Normally, the height range of antenna is 1 m to 4 m, the azimuth range of turntable is 0° to 360°, and the receive antenna has two polarizations Vertical (V) and Horizontal (H).

Above 1GHz：

The EUT is placed on a turntable 1.5 meters above the ground in the chamber, 3 meter away from the antenna. The maximal emission value is acquired by adjusting the antenna height, polarisation and turntable azimuth. Normally, the height range of antenna is 1 m to 4 m, the azimuth range of turntable is 0° to 360°, and the receive antenna has two polarizations Vertical (V) and Horizontal (H).

(a) Radiated Emission Test Set-Up, Frequency Below 30MHz

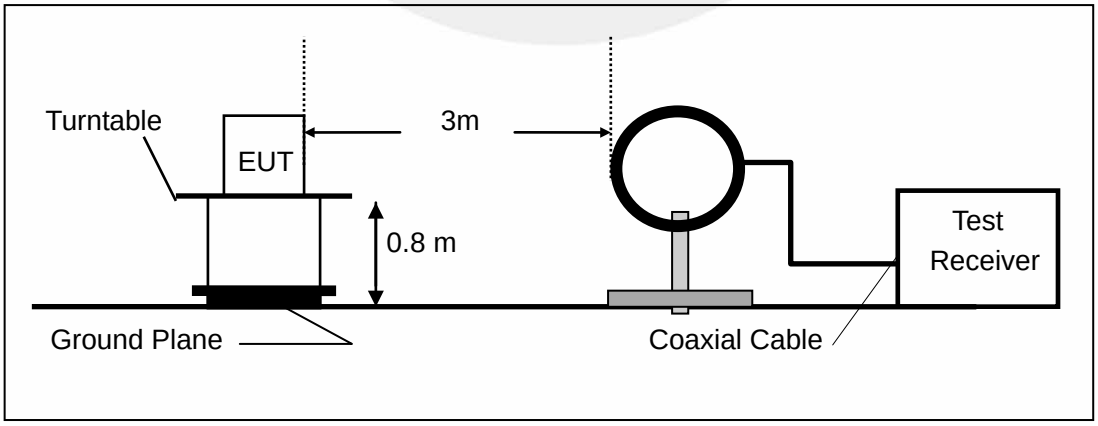

(b) Radiated Emission Test Set-Up, Frequency Below 1000MHz

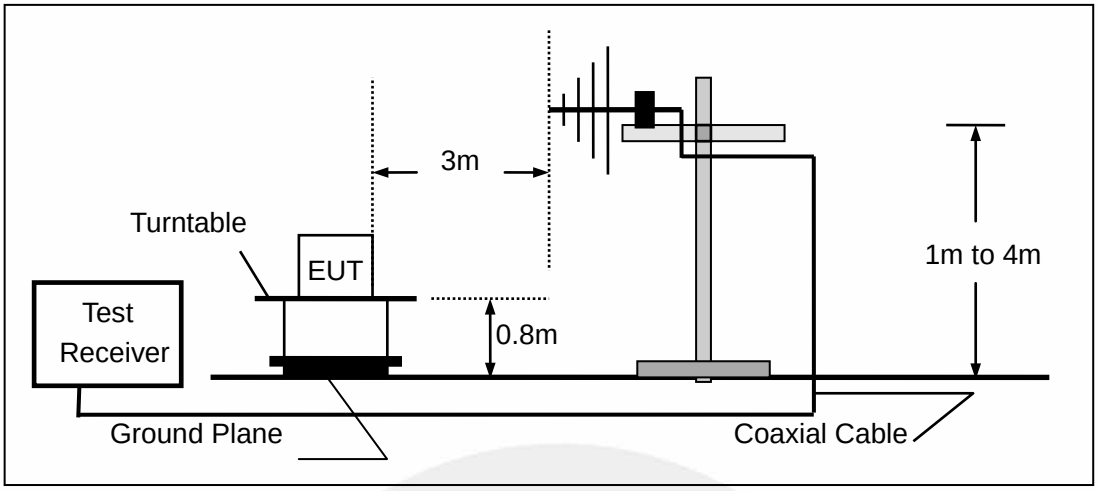

(c) Radiated Emission Test Set-Up, Frequency above 1000MHz

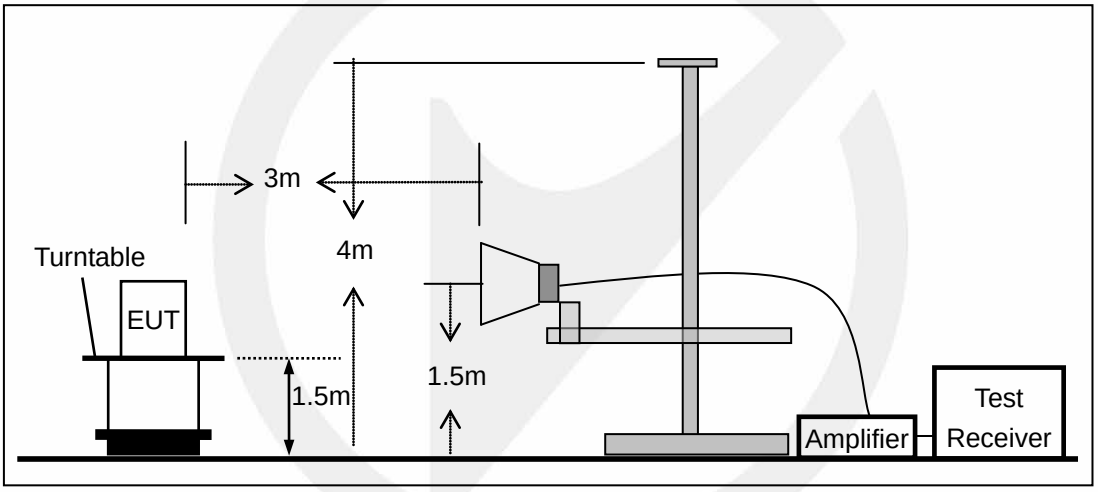

7.3 CONDUCTED EMISSION TEST SETUP

The mains cable of the EUT (maybe per AC/DC Adapter) must be connected to LISN. The LISN shall be placed 0.8 m from the boundary of EUT and bonded to a ground reference plane for LISN mounted on top of the ground reference plane. This distance is between the closest points of the LISN and the EUT. All other units of the EUT and associated equipment shall be at least 0.8m from the LISN.

Ground connections, where required for safety purposes, shall be connected to the reference ground point of the LISN and, where not otherwise provided or specified by the manufacturer, shall be of same length as the mains cable and run parallel to the mains connection at a separation distance of not more than 0.1 m.

According to the requirements in Section 13.1.4.1 of ANSI C63.10-2013 Conducted emissions from the EUT measured in the frequency range between 0.15 MHz and 30 MHz using CISPR Quasi-Peak and average detector mode.

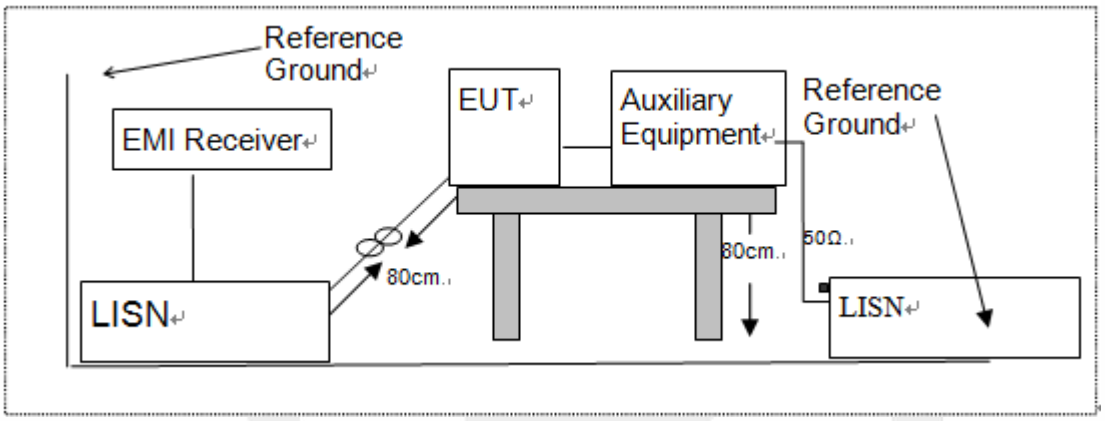

7.4 SUPPORT EQUIPMENT

EUT Cable List and Details			
Cable Description	Length (m)	Shielded/Unshielded	With / Without Ferrite
/	/	/	/

Auxiliary Cable List and Details			
Cable Description	Length (m)	Shielded/Unshielded	With / Without Ferrite
/	/	/	/

Auxiliary Equipment List and Details			
Description	Manufacturer	Model	Serial Number
/	/	/	/

Notes:

1. *All the equipment/cables were placed in the worst-case configuration to maximize the emission during the test.*
2. *Grounding was established in accordance with the manufacturer's requirements and conditions for the intended use.*

8 TEST REQUIREMENTS

8.1 BANDWIDTH TEST

8.1.1 Applicable Standard

According to FCC Part 15.249

8.1.2 Conformance Limit

N/A

8.1.3 Test Configuration

Test according to clause 7.1 radio frequency test setup 1

8.1.4 Test Procedure

The EUT was operating in controlled its channel. Printed out the test result from the spectrum by hard copy function.
The RF output of EUT was connected to the spectrum analyzer by RF cable and attenuator. The path loss was compensated to the results for each measurement.
Set to the maximum power setting and enable the EUT transmit continuously
Set RBW ≥ 1% of the 20 dB bandwidth(30KHz)
Set the video bandwidth (VBW) ≥ RBW(300KHz)
Set Span= approximately 2 to 3 times the 20 dB bandwidth
Set Detector = Peak.
Set Trace mode = max hold.
Set Sweep = auto couple.
Measure the maximum width of the emission that is constrained by the frequencies associated with the two outermost amplitude points (upper and lower frequencies) that are attenuated by 20 dB relative to the maximum level measured in the fundamental emission.
Measure and record the results in the test report.

Test Results

Temperature:	22° C
Relative Humidity:	53%
ATM Pressure:	1011 mbar

Operation Mode	Channel Number	Channel Frequency (MHz)	20db Measurement Bandwidth (MHz)	Limit (kHz)	Verdict
GFSK	1	2460	1.84	N/A	PASS
	10	2469	1.37	N/A	PASS
	19	2478	1.70	N/A	PASS
Note: N/A (Not Applicable)					

Test Model	Occupied Bandwidth GFSK Channel 1: 2460MHz

Date: 15.DEC.2022 16:52:30

Test Model	Occupied Bandwidth GFSK Channel 10: 2469MHz

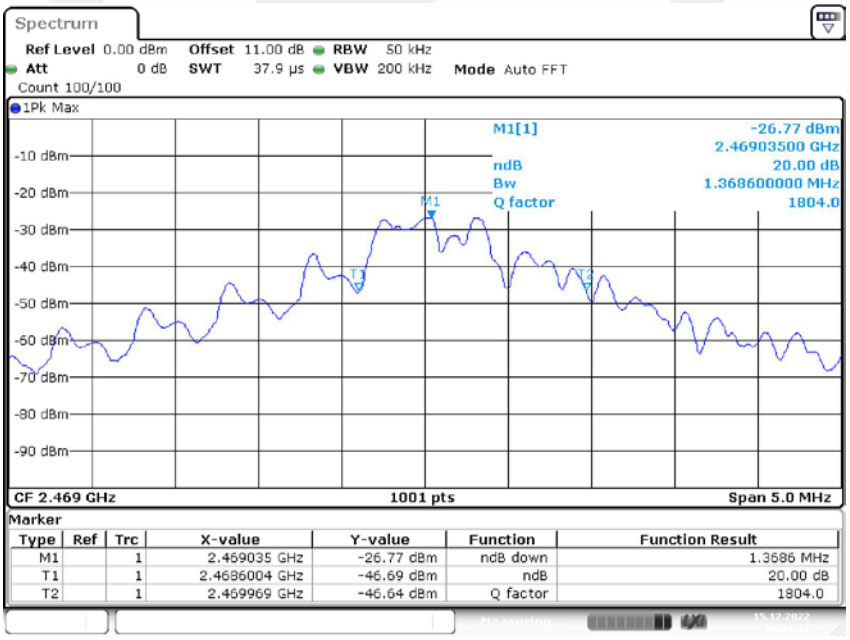

Date: 15.DEC.2022 16:53:17

Test Model	Occupied Bandwidth GFSK Channel 19: 2478MHz

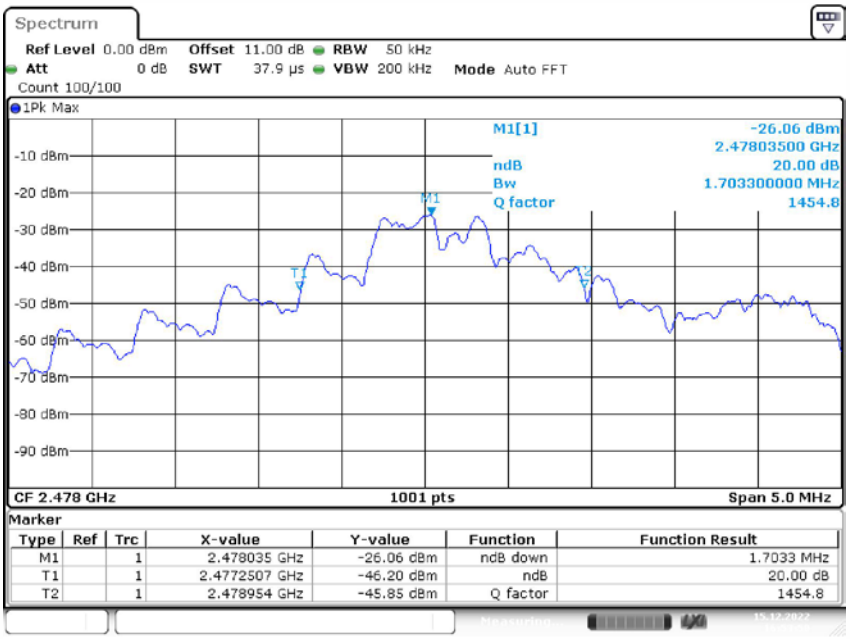

Marker

Type	Ref	Trc	X-value	Y-value	Function	Function Result
M1		1	2.478035 GHz	-26.06 dBm	ndB down	1.7033 MHz
T1		1	2.4772507 GHz	-46.20 dBm	ndB	20.00 dB
T2		1	2.478954 GHz	-45.85 dBm	Q factor	1454.8

Date: 15.DEC.2022 16:53:51

8.2 RADIATED SPURIOUS EMISSION

8.2.1 Applicable Standard

According to FCC Part 15.249 and 15.209

8.2.2 Conformance Limit

According to FCC Part 15.249: radiated emissions which fall in the restricted bands, as defined in §15.205(a), must also comply with the radiated emission limits specified in §15.209(a) (see §15.205(c)).
According to FCC Part15.205, Restricted bands

MHz	MHz	MHz	GHz
0.090-0.110	16.42-16.423	399.9-410	4.5-5.15
10.495-0.505	16.69475-16.69525	608-614	5.35-5.46
2.1735-2.1905	16.80425-16.80475	960-1240	7.25-7.75
4.125-4.128	25.5-25.67	1300-1427	8.025-8.5
4.17725-4.17775	37.5-38.25	1435-1626.5	9.0-9.2
4.20725-4.20775	73-74.6	1645.5-1646.5	9.3-9.5
6.215-6.218	74.8-75.2	1660-1710	10.6-12.7
6.26775-6.26825	123-138	2200-2300	14.47-14.5
8.291-8.294	149.9-150.05	2310-2390	15.35-16.2
8.362-8.366	156.52475-156.52525	2483.5-2500	17.7-21.4
8.37625-8.38675	156.7-156.9	2690-2900	22.01-23.12
8.41425-8.41475	162.0125-167.17	3260-3267	23.6-24.0
12.29-12.293	167.72-173.2	3332-3339	31.2-31.8
12.51975-12.52025	240-285	3345.8-3358	36.43-36.5
12.57675-12.57725	322-335.4	3600-4400	(2)
13.36-13.41			

According to FCC Part15.205, the level of any transmitter spurious emission in Restricted bands shall not exceed the level of the emission specified in the following table

Restricted Frequency(MHz)	Field Strength (μV/m)	Field Strength (dBμV/m)	Measurement Distance
0.009-0.490	2400/F(KHz)	20 log (uV/m)	300
0.490-1.705	2400/F(KHz)	20 log (uV/m)	30
1.705-30	30	29.5	30
30-88	100	40	3
88-216	150	43.5	3
216-960	200	46	3
Above 960	500	54	3

Remark :1. Emission level in dBuV/m=20 log (uV/m)
2. Measurement was performed at an antenna to the closed point of EUT distance of meters.
3. Distance extrapolation factor =40log(Specific distance/ test distance)(dB);
Limit line=Specific limits(dBuV) + distance extrapolation factor.
for the frequency ranges below 30 MHz, a narrower RBW is used for these ranges but the measured value should add a RBW correction factor (RBWCF) where RBWCF [dB] =10*lg(100 [kHz]/narrower RBW [kHz]). , the narrower RBW is 1 kHz and RBWCF is 20 dB for the frequency 9 kHz to 150 kHz, and the narrower RBW is 10 kHz and RBWCF is 10 dB for the frequency 150 kHz to 30 MHz.

Field strength of fundamental and Field strength of harmonics Limit:

Fundamental frequency	Field strength of fundamental (millivolts/meter)	Field strength of harmonics (microvolts/meter)
902-928 MHz	50(94 dBuV/m)	500(54 dBuV/m)
2400-2483.5 MHz	50(94 dBuV/m)	500(54 dBuV/m)
5725-5875 MHz	50(94 dBuV/m)	500(54 dBuV/m)
24.0-24.25 GHz	250(108 dBuV/m)	2500(68 dBuV/m)

As shown in §15.35(b), for frequencies above 1000 MHz, the field strength limits in paragraphs (a) and (b) of this section are based on average limits. However, the peak field strength of any emission shall not exceed the maximum permitted average limits specified above by more than 20 dB under any condition of modulation

For this report

Fundamental Frequency	Field Strength Of Fundamental	Field Strength of Spurious Emissions
2400-2483.5 MHz	AV:94 dBuV/m at 3m distance	AV:54 dBuV/m at 3m distance
	PK:114 dBuV/m at 3m distance	PK:74 dBuV/m at 3m distance

8.2.3 Test Configuration

Test according to clause 7.2 radio frequency test setup 2

8.2.4 Test Procedure

This test is required for any spurious emission that falls in a Restricted Band, as defined in Section 15.205. It must be performed with the highest gain of each type of antenna proposed for use with the EUT. Use the following spectrum analyzer settings:
The EUT was placed on a turn table which is 0.8m above ground plane.
Maximum procedure was performed on the highest emissions to ensure EUT compliance.
Span = wide enough to fully capture the emission being measured
RBW = 1 MHz for f ≥ 1 GHz(1GHz to 25GHz), 100 kHz for f < 1 GHz(30MHz to 1GHz)
VBW ≥ RBW
Sweep = auto
Detector function = peak
Trace = max hold
Follow the guidelines in ANSI C63.10-2013 with respect to maximizing the emission by rotating the EUT, measuring the emission while the EUT is situated in three orthogonal planes (if appropriate), adjusting the measurement antenna height and polarization, etc. A pre-amp and a high pass filter are required for this test, in order to provide the measuring system with sufficient sensitivity. Allow the trace to stabilize. The peak reading of the emission, after being corrected by the antenna factor, cable loss, pre-amp gain, etc., is the peak field strength, which must comply with the limit specified in Section 15.35(b). Submit this data.
Now set the VBW to 10 Hz, while maintaining all of the other instrument settings. This peak level, once corrected, must comply with the limit specified in Section 15.209. If the dwell time per channel of the hopping signal is less than 100 ms, then the reading obtained with the 10 Hz VBW may be further adjusted by a “duty cycle correction factor”, derived from 20log(dwell time/100 ms), in an effort to demonstrate compliance with the 15.209 limit. Submit this data.
Repeat above procedures until all frequency measured was complete.

8.2.5 Test Results

Temperature:	24° C
Relative Humidity:	53%
ATM Pressure:	1011 mbar

■ Spurious Emission below 30MHz (9KHz to 30MHz)

Freq. (MHz)	Ant.Pol. H/V	Emission Level(dBuV/m)		Limit 3m(dBuV/m)		Over(dB)	
		PK	AV	PK	AV	PK	AV
--	--	--	--	--	--	--	--

Note: the amplitude of spurious emission that is attenuated by more than 20dB below the permissible limit has no need to be reported.
Distance extrapolation factor =40log(Specific distance/ test distance)(dB);
Limit line=Specific limits(dBuV) + distance extrapolation factor

■ Field Strength of the fundamental signal

Freq. (MHz)	Ant.Pol. H/V	Emission Level(dBuV/m)		Limit 3m(dBuV/m)		Over(dB)	
		PK	AV	PK	AV	PK	AV
2460	V	83.98	71.69	114	94	-18.46	-22.31
2460	H	83.43	70.54	114	94	-14.35	-23.46
2469	V	83.64	71.54	114	94	-17.14	-22.46
2469	H	83.09	70.56	114	94	-15.09	-23.44
2478	V	83.23	70.63	114	94	-18.29	-23.37
2478	H	82.95	71.99	114	94	-15.43	-22.01

Note: (1) Correct Factor= Antenna Factor +Cable Loss- Amplifier Gain
(2) Emission Level= Reading Level+Probe Factor +Cable Loss

■ Out of Band Emissions

Test mode: GFSK Frequency: Channel 1: 2460MHz

Frequency (MHz)	Polarity	PK(dBuV/m) (VBW=3MHz)	Limit 3m (dBuV/m)	Over(dB)	AV(dBuV/m) (VBW=10Hz)	Limit 3m (dBuV/m)	Over(dB)
2388.66	V	44.88	74	-29.12	41.22	54	-12.78
2388.29	H	44.94	74	-29.06	43.10	54	-10.90

Test mode: GFSK Frequency: Channel 19: 2478MHz

Frequency (MHz)	Polarity	PK(dBuV/m) (VBW=3MHz)	Limit 3m (dBuV/m)	Over(dB)	AV(dBuV/m) (VBW=10Hz)	Limit 3m (dBuV/m)	Over(dB)
2483.61	V	50.01	74	-23.99	46.05	54	-7.95
2483.50	H	51.89	74	-22.13	45.95	54	-8.05

Note: (1) All Readings are Peak Value (VBW=3MHz) and Peak Value (VBW=10Hz).
(2) Emission Level= Reading Level+Correct Factor +Cable Loss.
(3) Correct Factor= Ant_F + Cab_L - Preamp
(4)Data of measurement within this frequency range shown " -- " in the table above means the reading of emissions are attenuated more than 20dB below the permissible limits or the field strength is too small to be measured.

Test Model	Band Emissions Low Test By: XZC	GFSK	H

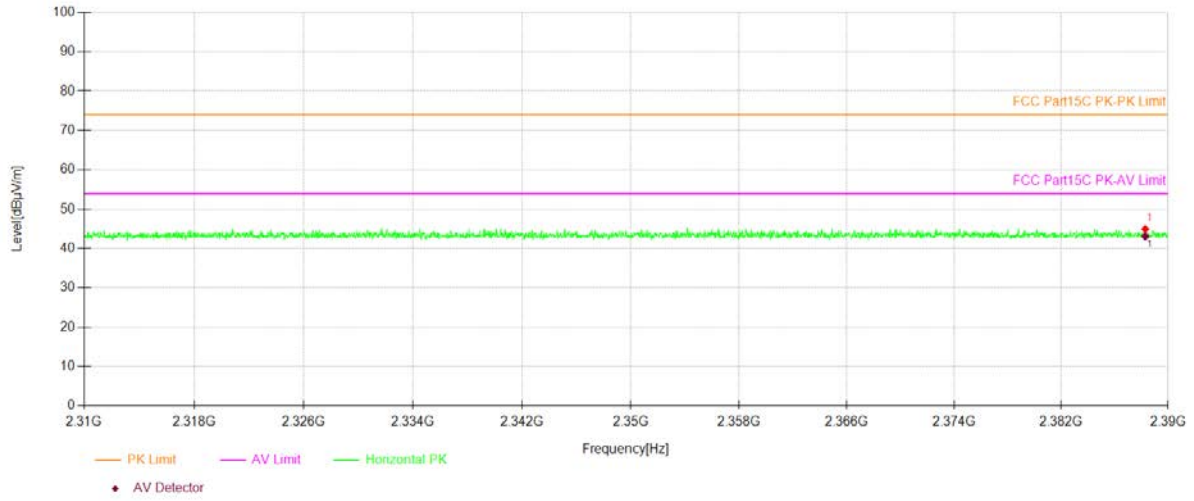

Test Model	Band Emissions Low Test By: XZC	GFSK	V

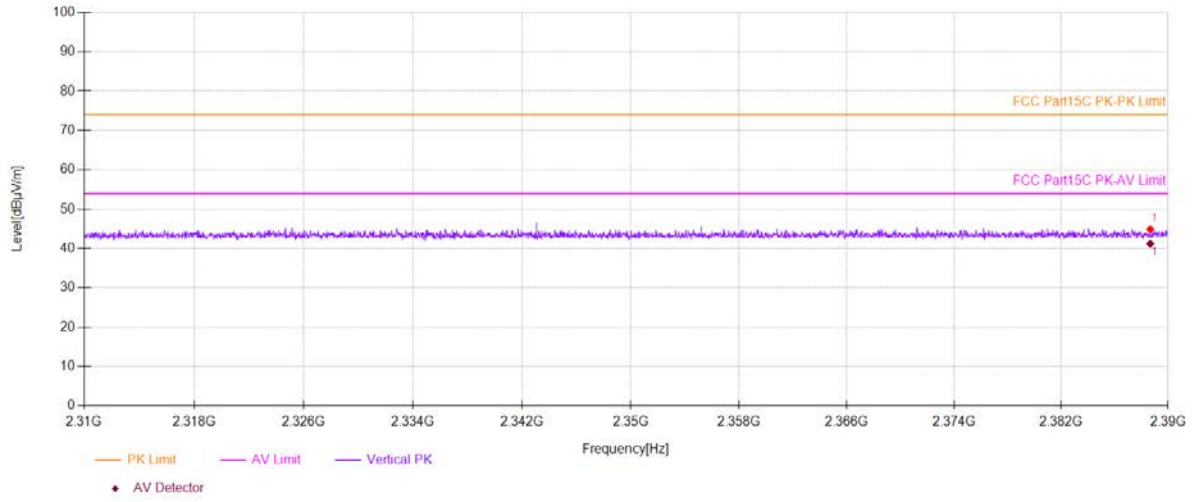

Test Model	Band Emissions High Test By: XZC	GFSK	H

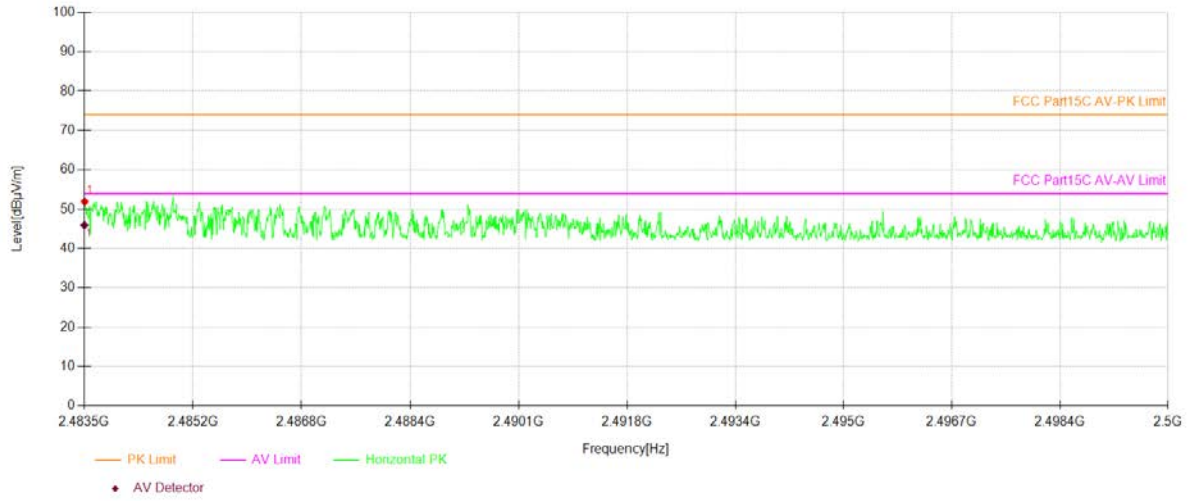

Test Model	Band Emissions High Test By: XZC	GFSK	V

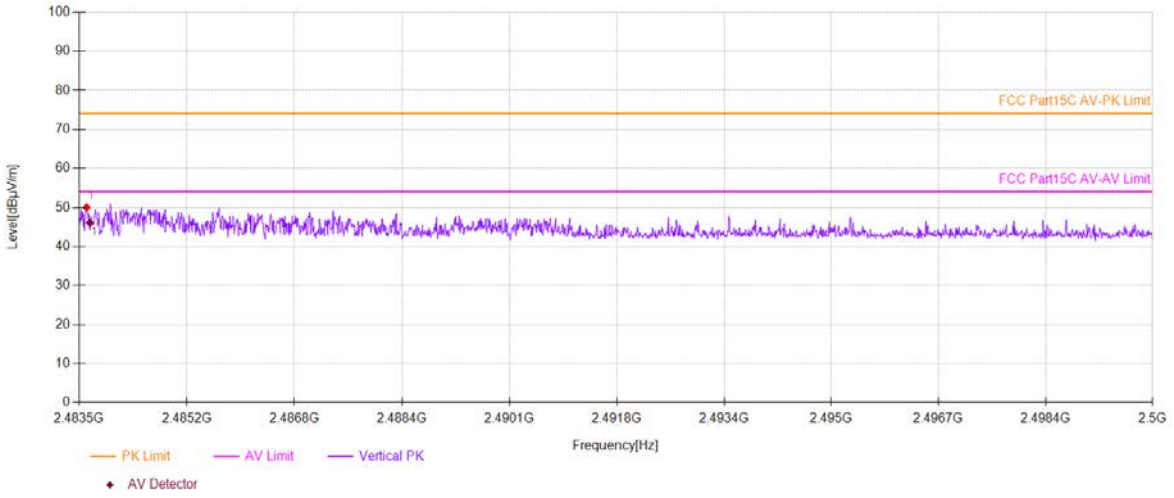

■ Spurious Emission Above 1GHz (1GHz to 25GHz)

Test mode: GFSK Frequency: Channel 1: 2460MHz

Freq. (MHz)	Ant.Pol. H/V	Emission Level(dBuV/m) PK	Emission Level(dBuV/m) AV	Limit 3m(dBuV/m) PK	Limit 3m(dBuV/m) AV	Over(dB) PK	Over(dB) AV
4920	V	55.83	52.29	74	54	-18.17	-1.71
11381.25	V	61.04	43.91	74	54	-12.96	-10.09
17621.25	V	69.93	47.00	74	54	-4.07	-7.00
4920.040	H	54.49	50.49	74	54	-19.51	-3.51
11360.62	H	60.63	43.74	74	54	-13.37	-10.26
17613.75	H	69.10	48.46	74	54	-4.90	-5.54

Test mode: GFSK Frequency: Channel 10: 2469MHz

Freq. (MHz)	Ant.Pol. H/V	Emission Level(dBuV/m) PK	Emission Level(dBuV/m) AV	Limit 3m(dBuV/m) PK	Limit 3m(dBuV/m) AV	Over(dB) PK	Over(dB) AV
4936.875	V	55.15	41.10	74	54	-18.85	-12.90
11495.62	V	61.31	44.88	74	54	-12.69	-9.12
17638.12	V	69.31	46.45	74	54	-4.69	-7.55
4938.75	H	55.64	48.34	74	54	-18.36	-5.66
11521.87	H	60.51	45.24	74	54	-13.49	-8.76
17602.5	H	70.06	48.24	74	54	-3.94	-5.76

Test mode: GFSK Frequency: Channel 19: 2475MHz

Freq. (MHz)	Ant.Pol. H/V	Emission Level(dBuV/m) PK	Emission Level(dBuV/m) AV	Limit 3m(dBuV/m) PK	Limit 3m(dBuV/m) AV	Over(dB) PK	Over(dB) AV
4955.625	V	56.33	51.55	74	54	-17.67	-2.45
11385	V	60.68	43.65	74	54	-13.32	-10.35
17619.37	V	69.72	48.28	74	54	-4.28	-5.72
4955.625	H	54.07	49.71	74	54	-19.93	-4.29
11546.25	H	60.76	43.82	74	54	-13.24	-10.18
17628.75	H	69.27	47.36	74	54	-4.73	-6.64

Note: (1) All Readings are Peak Value (VBW=3MHz) and Peak Value (VBW=10Hz).
(2) Emission Level= Reading Level+Correct Factor +Cable Loss.
(3) Correct Factor= Ant_F + Cab_L - Preamp
(4)Data of measurement within this frequency range shown " -- " in the table above means the reading of emissions are attenuated more than 20dB below the permissible limits or the field strength is too small to be measured.

■ Spurious Emission below 1GHz (30MHz to 1GHz)

All modes have been tested, and the worst result recorded was report as below:

Mode:	2460

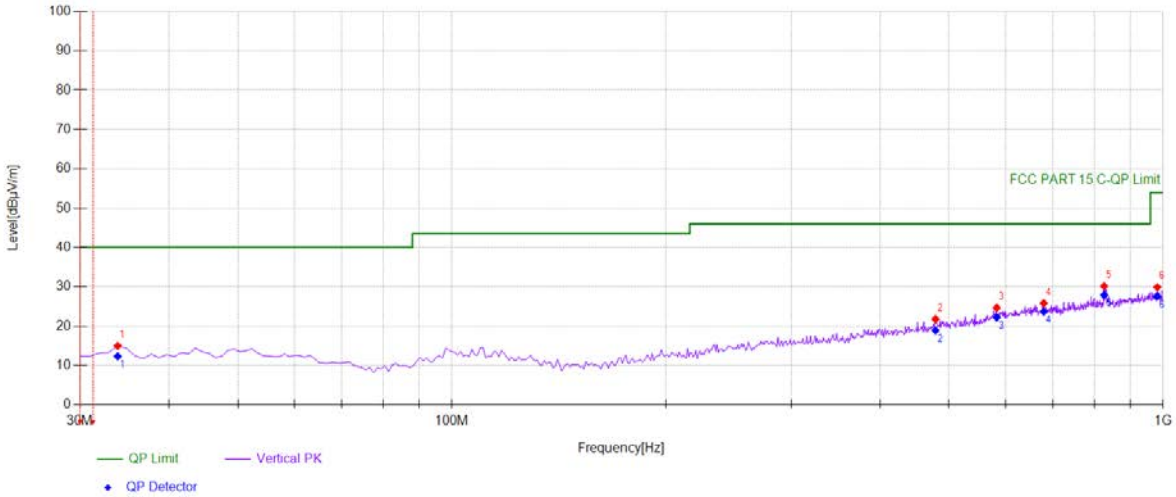

Suspected Data List									
NO.	Freq. [MHz]	Level [dBμV/m]	Factor[dB/m]	Limit [dBμV/m]	Margin [dB]	Detector	Height [cm]	Angle [°]	Polarity
1	33.8839	15.01	-18.29	40.00	24.99	PK	100	234	Vertical
2	478.588	21.78	-9.87	46.00	24.22	PK	100	86	Vertical
3	583.453	24.69	-7.14	46.00	21.31	PK	100	52	Vertical
4	679.579	25.81	-6.10	46.00	20.19	PK	100	220	Vertical
5	826.196	30.19	-4.19	46.00	15.81	PK	100	253	Vertical
6	981.551	29.90	-1.78	54.00	24.10	PK	100	152	Vertical

Mode:	2460

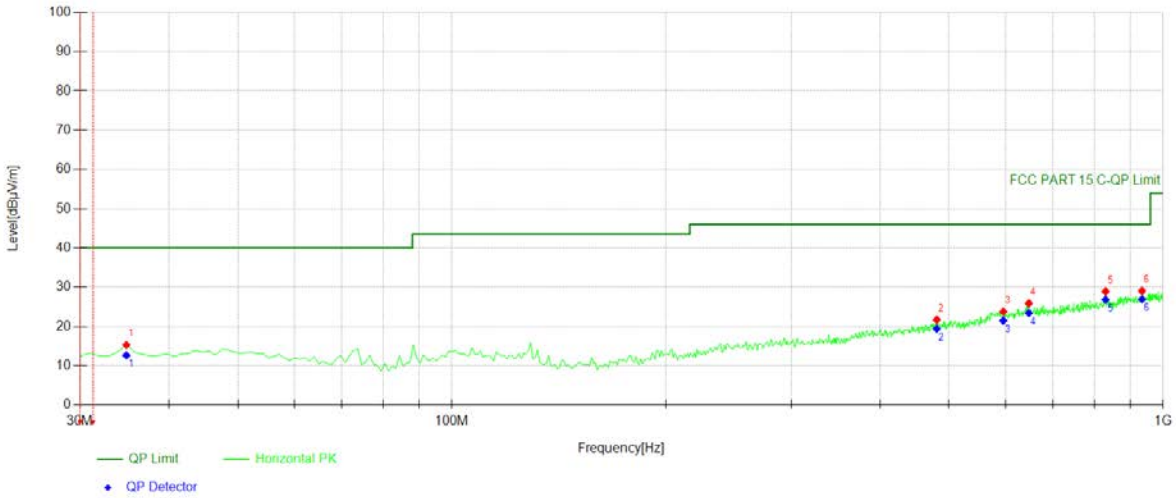

Suspected Data List									
NO.	Freq. [MHz]	Level [dBμV/m]	Factor[dB/m]	Limit [dBμV/m]	Margin [dB]	Detector	Height [cm]	Angle [°]	Polarity
1	34.8549	15.32	-18.23	40.00	24.68	PK	100	256	Horizontal
2	480.530	21.72	-9.78	46.00	24.28	PK	100	292	Horizontal
3	596.076	23.79	-7.14	46.00	22.21	PK	100	104	Horizontal
4	647.537	25.88	-6.23	46.00	20.12	PK	100	297	Horizontal
5	830.080	28.93	-4.12	46.00	17.07	PK	100	142	Horizontal
6	933.974	29.05	-2.55	46.00	16.95	PK	100	232	Horizontal

Mode:	2469

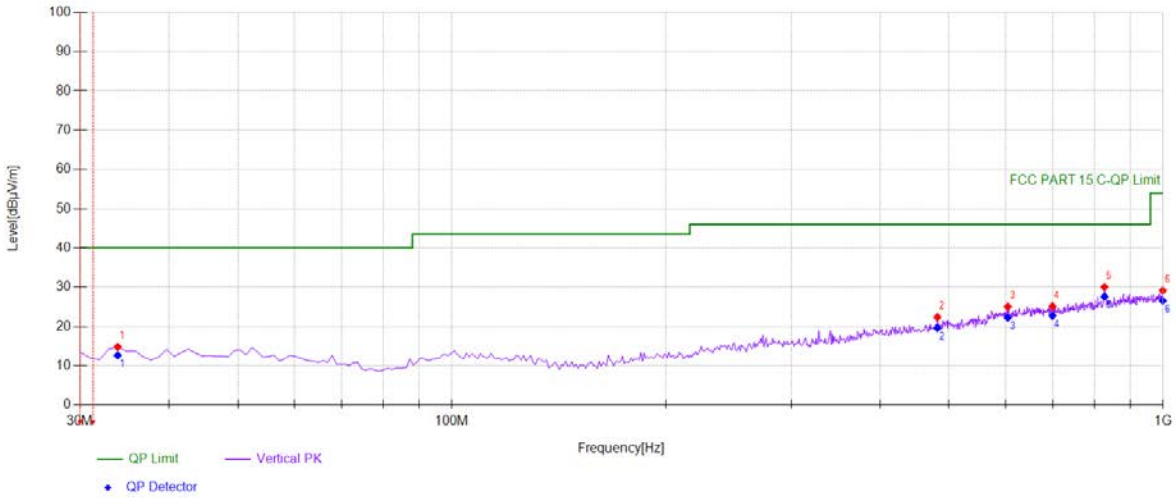

Suspected Data List									
NO.	Freq. [MHz]	Level [dBμV/m]	Factor[dB/m]	Limit [dBμV/m]	Margin [dB]	Detector	Height [cm]	Angle [°]	Polarity
1	33.8839	14.80	-18.29	40.00	25.20	PK	100	199	Vertical
2	481.501	22.37	-9.78	46.00	23.63	PK	100	76	Vertical
3	604.814	25.03	-7.11	46.00	20.97	PK	100	158	Vertical
4	698.999	25.14	-5.95	46.00	20.86	PK	100	208	Vertical
5	827.167	30.06	-4.17	46.00	15.94	PK	100	268	Vertical
6	999.029	29.14	-1.72	54.00	24.86	PK	100	199	Vertical

Mode:	2469

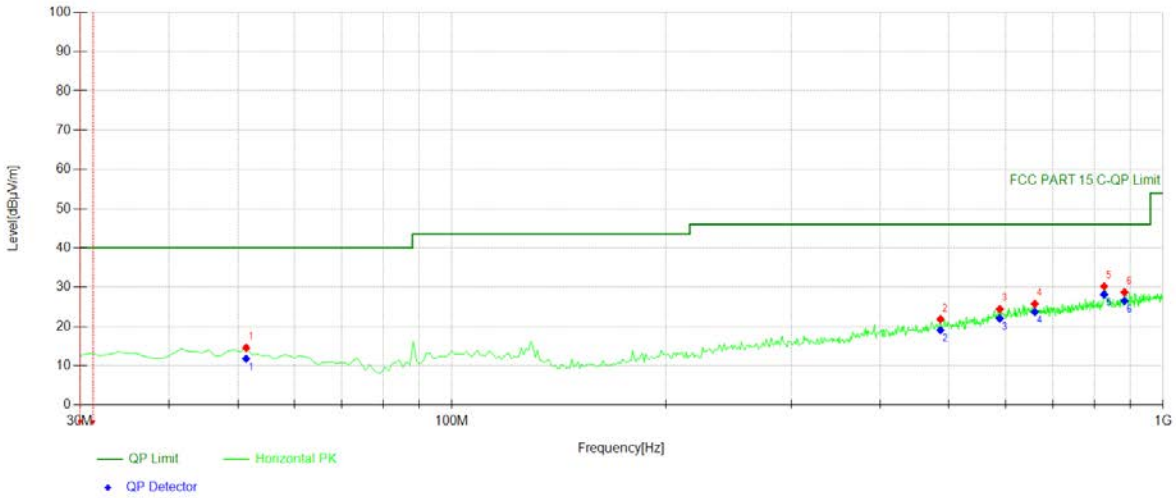

Suspected Data List									
NO.	Freq. [MHz]	Level [dBμV/m]	Factor[dB/m]	Limit [dBμV/m]	Margin [dB]	Detector	Height [cm]	Angle [°]	Polarity
1	51.3614	14.57	-17.39	40.00	25.43	PK	100	330	Horizontal
2	486.356	21.83	-9.79	46.00	24.17	PK	100	9	Horizontal
3	589.279	24.42	-7.14	46.00	21.58	PK	100	242	Horizontal
4	660.160	25.73	-6.13	46.00	20.27	PK	100	186	Horizontal
5	826.196	30.23	-4.19	46.00	15.77	PK	100	50	Horizontal
6	882.512	28.72	-2.95	46.00	17.28	PK	100	330	Horizontal

Mode:	2478

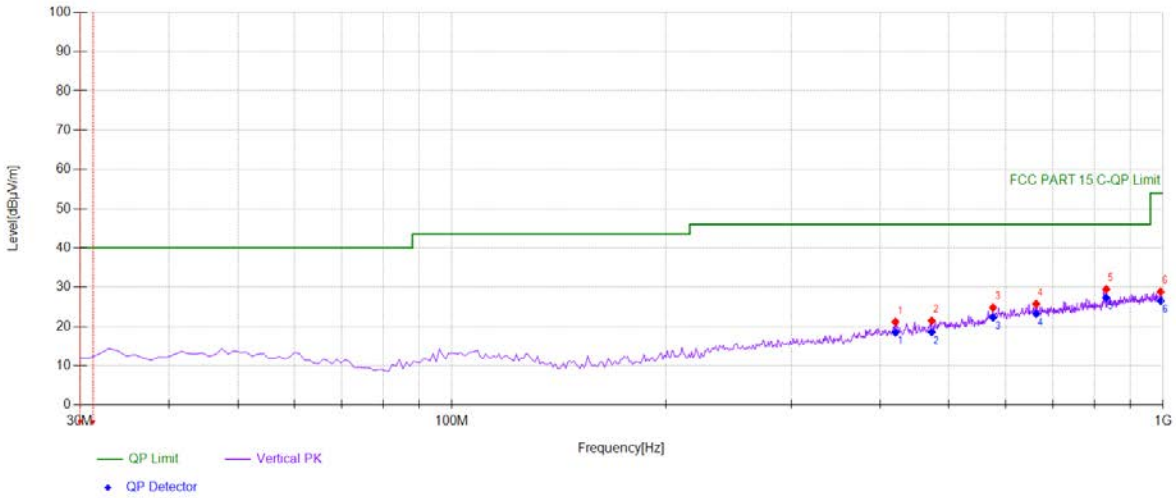

Suspected Data List									
NO.	Freq. [MHz]	Level [dBμV/m]	Factor[dB/m]	Limit [dBμV/m]	Margin [dB]	Detector	Height [cm]	Angle [°]	Polarity
1	420.330	21.19	-11.73	46.00	24.81	PK	100	100	Vertical
2	472.762	21.45	-10.24	46.00	24.55	PK	100	90	Vertical
3	576.656	24.81	-7.44	46.00	21.19	PK	100	136	Vertical
4	663.073	25.73	-6.14	46.00	20.27	PK	100	227	Vertical
5	832.022	29.49	-4.07	46.00	16.51	PK	100	259	Vertical
6	992.232	28.85	-1.70	54.00	25.15	PK	100	241	Vertical

Mode:	2478

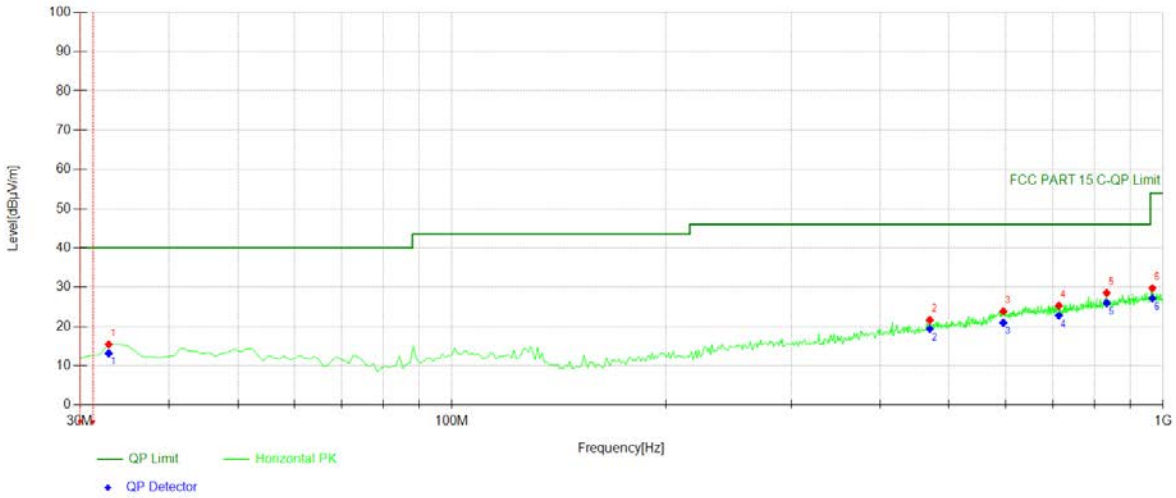

Suspected Data List									
NO.	Freq. [MHz]	Level [dBμV/m]	Factor[dB/m]	Limit [dBμV/m]	Margin [dB]	Detector	Height [cm]	Angle [°]	Polarity
1	32.9129	15.45	-18.35	40.00	24.55	PK	100	224	Horizontal
2	469.849	21.65	-10.43	46.00	24.35	PK	100	124	Horizontal
3	596.076	23.86	-7.14	46.00	22.14	PK	100	270	Horizontal
4	713.563	25.31	-5.83	46.00	20.69	PK	100	151	Horizontal
5	832.993	28.53	-4.04	46.00	17.47	PK	100	329	Horizontal
6	966.016	29.72	-2.13	54.00	24.28	PK	100	64	Horizontal

8.3 CONDUCTED EMISSIONS TEST

8.3.1 Applicable Standard

According to FCC Part 15.207(a)

8.3.2 Conformance Limit

Conducted Emission Limit

Frequency(MHz)	Quasi-peak	Average
0.15-0.5	66-56	56-46
0.5-5.0	56	46
5.0-30.0	60	50

Note: 1. The lower limit shall apply at the transition frequencies
2. The limit decreases in line with the logarithm of the frequency in the range of 0.15 to 0.50MHz.

8.3.3 Test Configuration

Test according to clause 7.3 conducted emission test setup

8.3.4 Test Procedure

The EUT was placed on a table which is 0.8m above ground plane.
Maximum procedure was performed on the highest emissions to ensure EUT compliance.
Repeat above procedures until all frequency measured were complete.

8.3.5 Test Results

Not Applicable

8.4 ANTENNA APPLICATION

8.4.1 Antenna Requirement

Standard	Requirement
FCC CRF Part 15.203	An intentional radiator shall be designed to ensure that no antenna other than that furnished by the responsible party shall be used with the device. The use of a permanently attached antenna or of an antenna that uses a unique coupling to the intentional radiator shall be considered sufficient to comply with the provisions of this section. The manufacturer may design the unit so that a broken antenna can be replaced by the user, but the use of a standard antenna jack or electrical connector is prohibited. This requirement does not apply to carrier current devices or to devices operated under the provisions of §15.211, §15.213, §15.217, §15.219, or §15.221. Further, this requirement does not apply to intentional radiators that must be professionally installed, such as perimeter protection systems and some field disturbance sensors, or to other intentional radiators which, in accordance with §15.31(d), must be measured at the installation site. However, the installer shall be responsible for ensuring that the proper antenna is employed so that the limits in this part are not exceeded.

For intentional device, according to FCC 47 CFR Section 15.203, an intentional radiator shall be designed to ensure that no antenna other than that furnished by the responsible party shall be used with the device.

8.4.2 Result

PASS.

- The EUT has 1 antenna: an Brass Antenna for 2.4G, antenna has a gain of 2 dBi;

Note:
- ☒ Antenna use a permanently attached antenna which is not replaceable.
- ☐ Not using a standard antenna jack or electrical connector for antenna replacement
- ☐ The antenna has to be professionally installed (please provide method of installation)

which in accordance to section 15.203, please refer to the internal photos.

Detail of factor for radiated emission

Frequency(MHz)	Ant_F(dB)	Cab_L(dB)	Preamp(dB)	Correct Factor(dB)
0.009	20.6	0.03	\	20.63
0.15	20.7	0.1	\	20.8
1	20.9	0.15	\	21.05
10	20.1	0.28	\	20.38
30	18.8	0.45	\	19.25
30	11.7	0.62	27.9	-15.58
100	12.5	1.02	27.8	-14.28
300	12.9	1.91	27.5	-12.69
600	19.2	2.92	27	-4.88
800	21.1	3.54	26.6	-1.96
1000	22.3	4.17	26.2	0.27
1000	25.6	1.76	41.4	-14.04
3000	28.9	3.27	43.2	-11.03
5000	31.1	4.2	44.6	-9.3
8000	36.2	5.95	44.7	-2.55
10000	38.4	6.3	43.9	0.8
12000	38.5	7.14	42.3	3.34
15000	40.2	8.15	41.4	6.95
18000	45.4	9.02	41.3	13.12
18000	37.9	1.81	47.9	-8.19
21000	37.9	1.95	48.7	-8.85
25000	39.3	2.01	42.8	-1.49
28000	39.6	2.16	46.0	-4.24
31000	41.2	2.24	44.5	-1.06
34000	41.5	2.29	46.6	-2.81
37000	43.8	2.30	46.4	-0.3
40000	43.2	2.50	42.2	3.5