HOLY STONE

14+ age

Instructions For Use
日本語マニュアル
Gebrauchsanweisungen

V 1.0

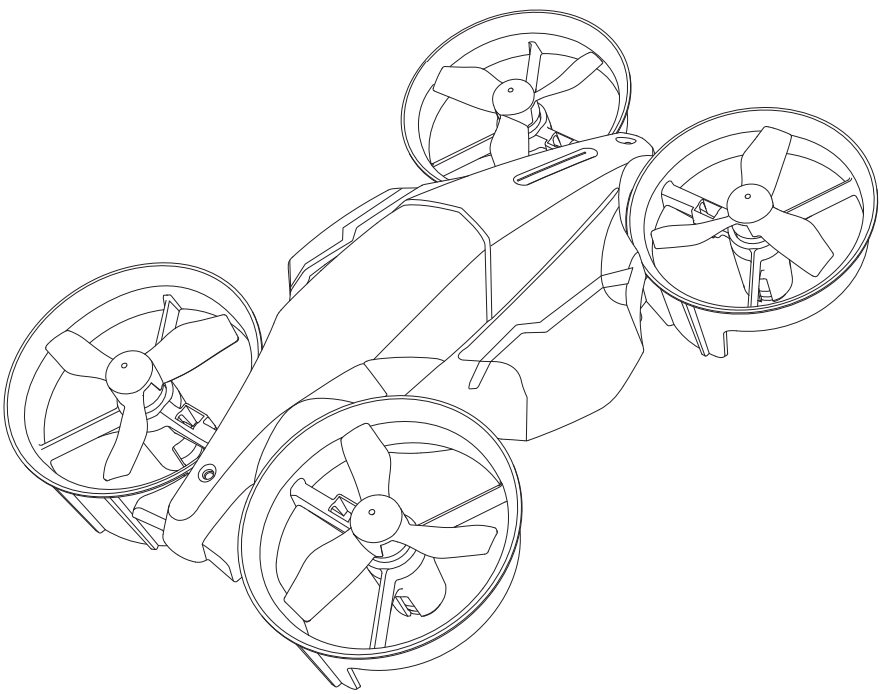

HS210F

+1(855) 888-6699

www.holystone.com

usa@holystone.com (USA)
ca@holystone.com (CA)

eu@holystone.com (EU)
jp@holystone.com (JP)

English 01-32

日本語 33–58

Deutsch 59-87

Contents

Disclaimer & Warning 1

Safety Guidelines 1

Maintenance 5

Package Contents 6

Drone Details 7

Transmitter Functions 8

Joystick Mode 9

Pre-Flight Preparations

- Charging 10
- Drone Battery 11
- Propellers 12
- Pairing 13

Flight

- One Key Takeoff 14
- One Key Landing 15

Flight Functions

- Speed Switch 16
- Light Switch 16
- 360° Flip 17
- Headless Mode 18
- Altitude-Hold Function 19
- Emergency Stop 20

The Land Mode
Basic Operations 21
360° Rotation 22
Fixed Speed Cruise 22
Attitude Adjustment
Trimmer 23
Calibrate the Gyro 24
Specifications 25
Contact Us 26
General Information 27

DISCLAIMER & WARNING

1. Please read this Disclaimer & Warning and Safety Guidelines carefully before using our product. This product is not recommended for people under the age of 14. By using this product, you hereby agree to this disclaimer and signify that you have read it fully. You agree that you are responsible for your own conduct and any damage caused while using this product, and any consequence. You agree to only use this product for it's designed purposes and in accordance with the local laws, regulations and all applicable policies and guidelines that HolyStone may provide.

2. When using this product, please be sure to strictly abide by the specification requirements and safety guidelines stated in this document. Any personal injury, property damage, legal disputes and all other adverse events caused by the violation of any of the safety instructions or due to any other factor, WILL NOT be HolyStone's responsibility.

SAFETY GUIDELINES

CHECK BEFORE USE

① This product is a high precision drone that integrates various electronic stability and control mechanisms. Please be sure to configure this drone carefully and correctly to ensure safe, accident-free operation.

② Ensure that the batteries of the drone and transmitter are clean, undamaged, and fully charged before every use.

③ Ensure that all the propellers are undamaged and are installed in the correct orientation.

SAFETY GUIDELINES

④ Please perform a thorough check of the product before each use. Inspect the integrity of the parts, any signs of cracks and wear off on the propellers, battery power and effectiveness of the indicator, etc. If there is any problem found after checking the drone, please refrain from using it until the problem is resolved.

FLIGHT ENVIRONMENT

Avoid flying over or near obstacles, crowds, high voltage power lines, trees, airports or bodies of water.
DO NOT fly near strong electromagnetic sources such as power lines and base stations as it may affect the onboard compass.

DO NOT use this drone in adverse weather conditions such as rain, snow, fog, and wind.

SAFETY GUIDELINES

OPERATION REQUIREMENTS

① DO NOT use this product to follow any moving vehicles.
② During the flight, turn off the motors only in case of an emergency.
③ When the battery runs low, return the drone back to your starting point.
④ DO NOT use this product if you feel tired, take medicine or feel unwell and drink alcohol.
⑤ Be aware of the volume of noise that the drone produces. Please ensure to keep your distance to avoid ear damage.

⑥ **Stay away from the rotating propellers and motors.**

⑦ **DO NOT fly in any spaces where drones are prohibited. Please respect people's right to privacy by not flying your drone close to others.**

USE OF BATTERY

① Please ensure batteries are fitted in the correct orientation as shown in the instruction manual.
② Avoid short circuits by fitting the batteries correctly, and do not crush or squeeze the batteries as this could cause the risk of a fire or explosion.
③ DO NOT mix new and old batteries as this can lead to a poor performance of the product.
④ Please dispose of used batteries carefully, do not litter and recycle where ever possible.
⑤ DO NOT expose dead batteries to heat or fire or they may explode.
⑥ If the device is not going to be used for an extended period of time, please remove batteries to prevent potential damage to the drone from battery leakage.

SAFETY GUIDELINES

⑦ Only use the USB charging cable that comes with the drone to charge the battery.
⑧ DO NOT connect the battery directly to wall outlets or car cigarette -lighter sockets as this will damage your battery since they have different voltages.
⑨ DO NOT attempt to disassemble or modify the battery in any way
⑩ DO NOT use the battery if it gives off an odor, generates heat, becomes discolored, deformed or appears abnormal in any way. If any of these situations occur while the battery is in use or being charged, remove it from the device or charger immediately and discontinue use.
⑪ DO NOT pierce the battery casing with a nail or any other sharp object, break it open with a hammer, or step on it! Dispose or recycle this battery as it may cause personal injury or damage to your drone.
⑫ Always charge the batteries on a fireproof surface and away from combustible materials. DO NOT charge on surfaces that can catch fire, which includes: wood, cloth, and carpet.
⑬ DO NOT immerse the battery in water or get it wet.
⑭ DO NOT solder the battery terminal in any way.
⑮ Keep batteries out of reach of children or pets.
⑯ DO NOT short-circuit the battery by connecting wires or any other metal object to the positive(+) and negative(-) terminals.

Li-Po Battery Disposal & Recycling

Waste Lithium-polymer batteries must not be placed with household trash. To dispose of waste batteries, please contact the local environmental or waste agencies, the supplier of your model, or your nearest Li-Po battery recycling center.

MAINTENANCE

① Clean the drone after each use with a clean, soft cloth.

② Avoid prolonged exposure to direct sunlight and avoid buildup of heat on the drone or batteries.

③ This device is not waterproof and must not be submerged or subjected to water under any circumstance. Failure to keep the device completely dry may likely damage the unit permanently. Be aware that although it might be dry where you are, droplets of rain or mist from a river or waterfall could damage your drone where it is flying.

④ Frequently check the charging plug and other accessories for signs of damage. If any part of the device or cables are damaged, avoid using or charging until the damaged parts are replaced.

PACKAGE CONTENTS

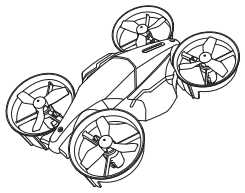	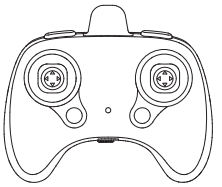	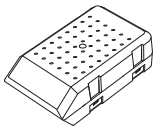
Drone	Transmitter	Drone Battery
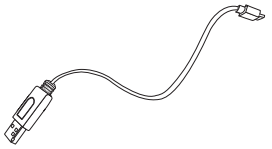		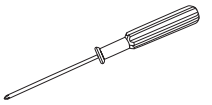
USB Charging Cable	Propellers	Screwdriver
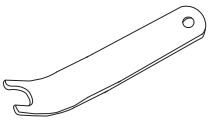		
Propellers Spanner	Instructions For Use	

DRONE DETAILS

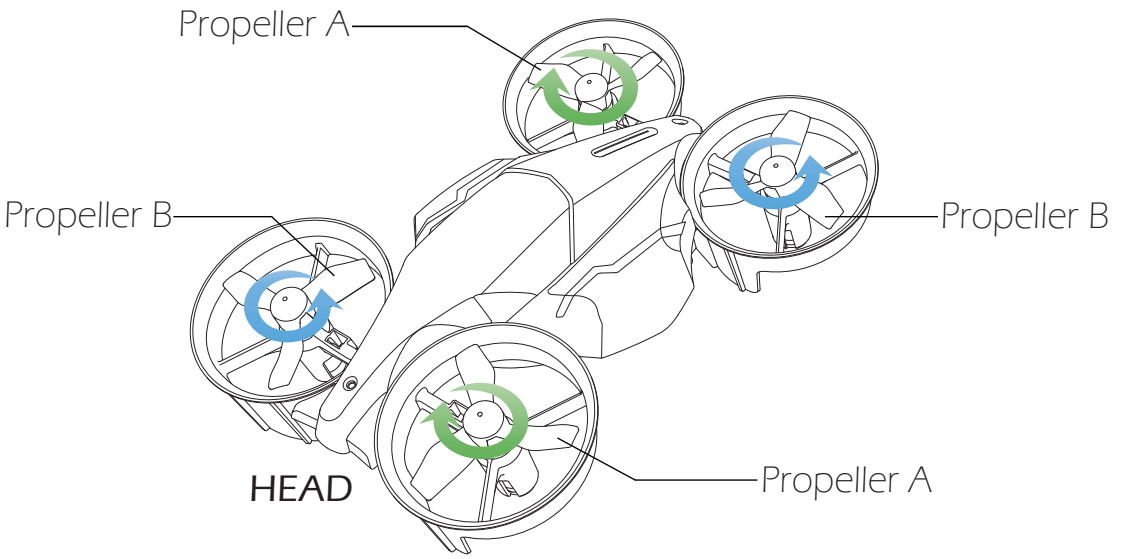

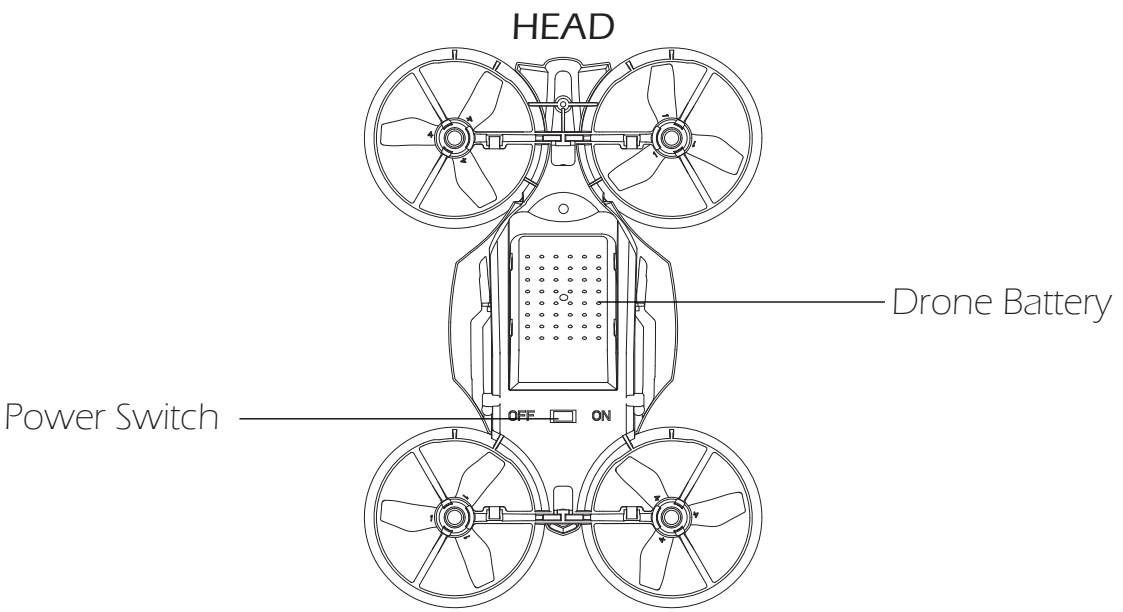

TRANSMITTER FUNCTIONS

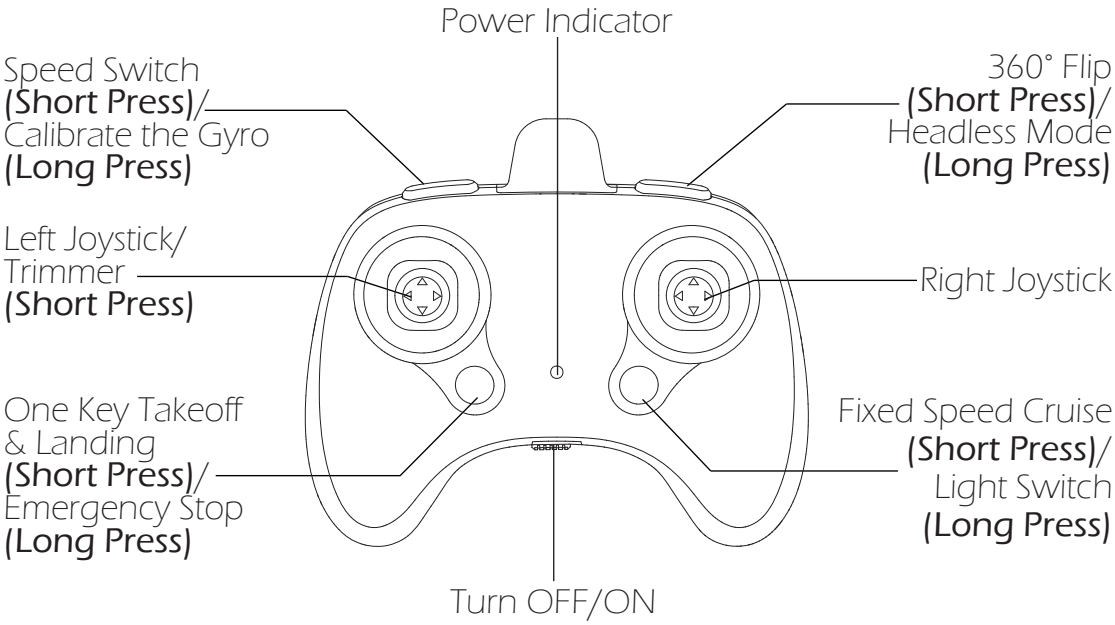

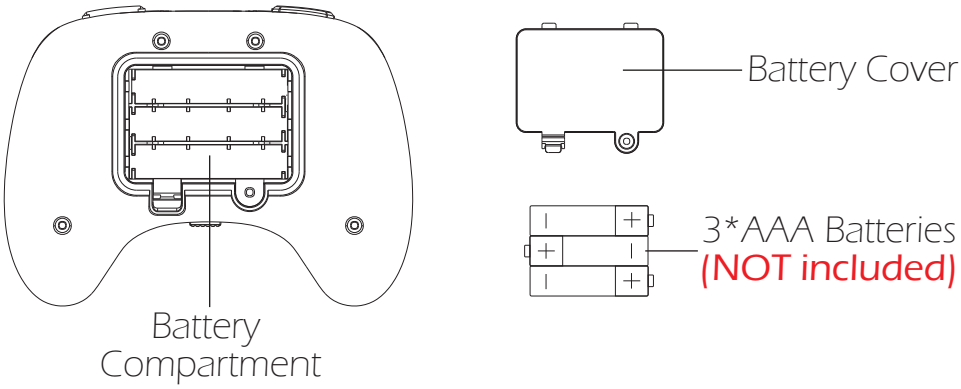

Remove the battery cover on the back of the transmitter, insert three AAA batteries **(not included)** into the battery compartment. Then put the battery cover back to complete the installation.

*** Low Battery Signal: The power indicator on the transmitter will flash continuously.**

⚠ - Install batteries carefully.
- Do not mix old and new batteries.
- Do not mix different types of batteries.

JOYSTICK MODE

MODE 2 (Left hand throttle MODE 2 will be the default setting.)

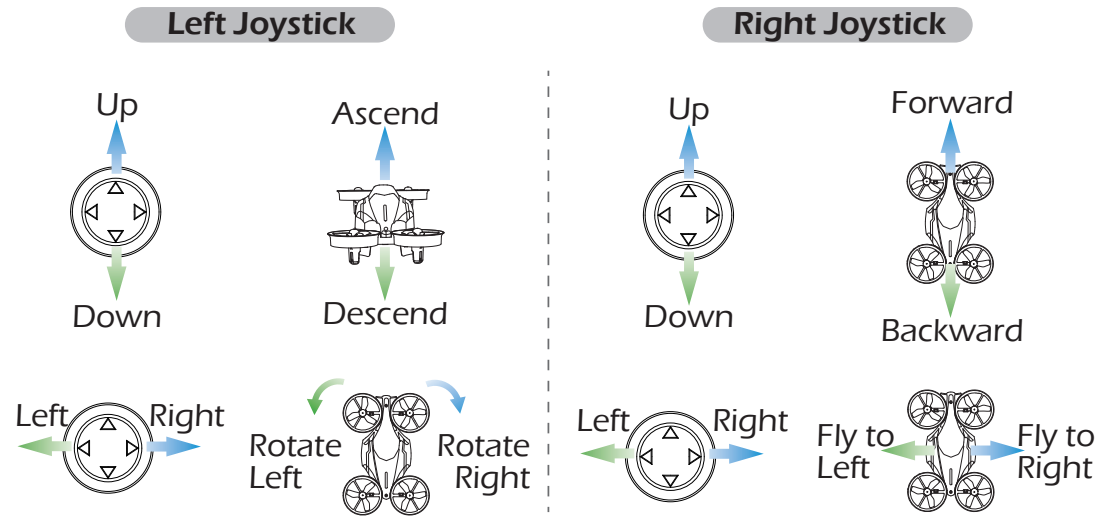

MODE 1

To enter MODE 1, turn on the transmitter while holding the "Speed Switch" button. (Please do not release the "Speed Switch" button until the transmitter is powered on.)

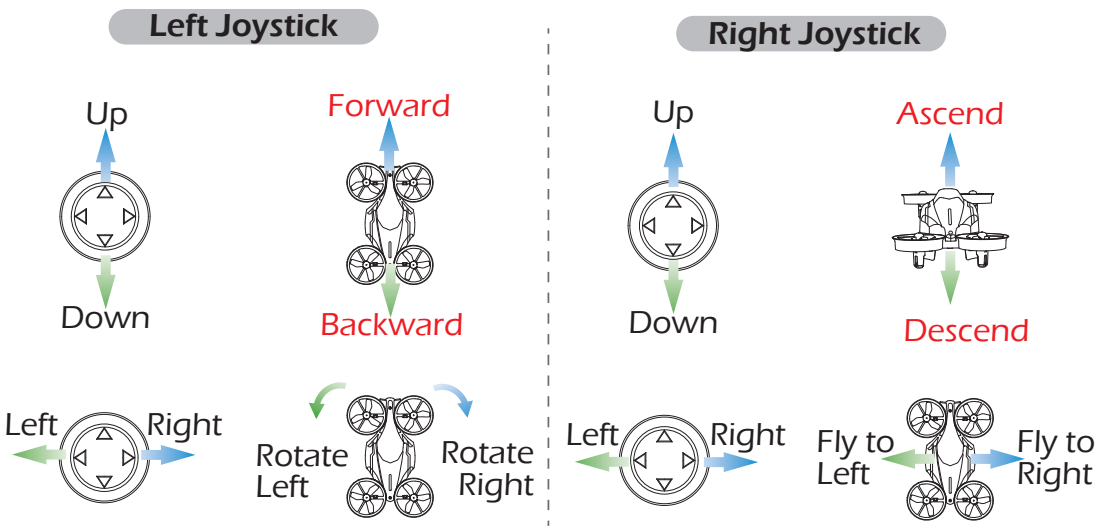

PRE-FLIGHT PREPARATIONS

CHARGING

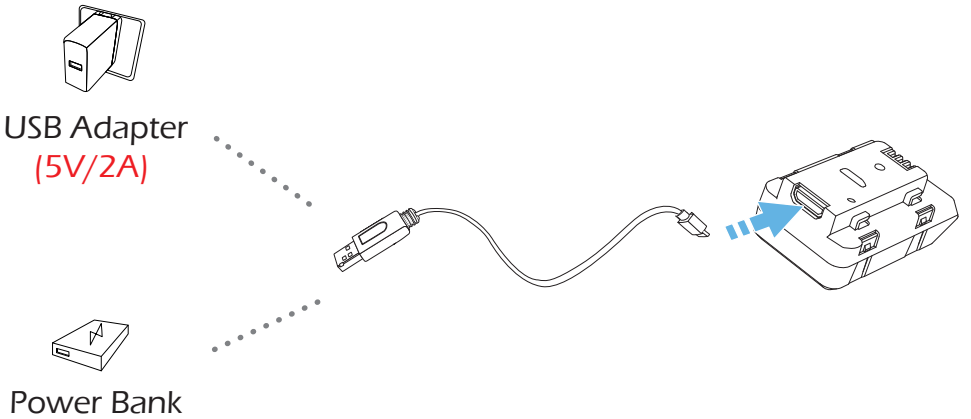

① Plug one end of the USB Charging Cable into drone' s battery.

② Plug the other end of the USB Charging Cable into a power bank or a USB adapter (5V/2A).

③ Charging time: about 50 minutes.

④ a. When the battery is charging, the indicator light on the USB Charging Cable is Red.

b. When the battery is fully charged, the indicator light on the USB Charging Cable will turn off.

* Low Battery Signal: The indicator lights on the drone will flash continuously.

⚠

- Before charging, please read the instructions in the "Use of Battery" section of the "Safety Guidelines" carefully!
- Please use the original charging cable to charge the battery.
- DO NOT charge the drone battery immediately after a flight as the temperature of the battery may be too high. Please wait until it cools down to room temperature before charging again.

PRE-FLIGHT PREPARATIONS

DRONE BATTERY

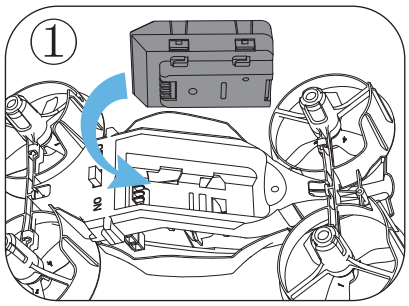

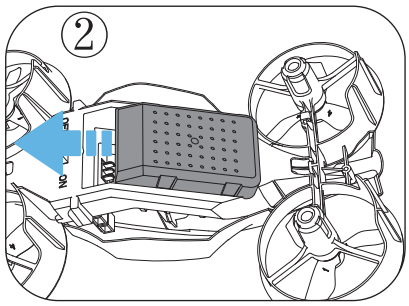

Installation: Put the battery onto the battery slot, which is underneath the fuselage. Push the battery forward until you hear a click, which indicates that it is firmly installed.

The battery should be installed firmly. Otherwise, the flight safety of your drone may be affected. The drone may crash due to a power cut during the flight.

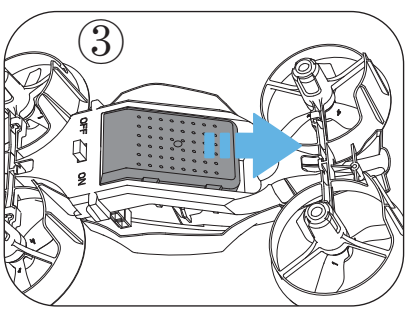

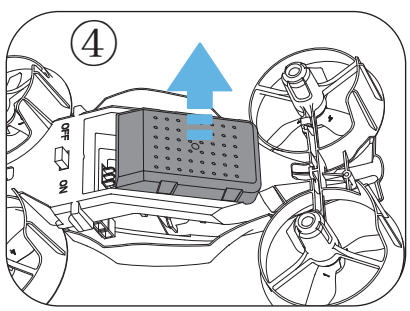

Remove: As depicted above, first push the battery back, then pull up.

PRE-FLIGHT PREPARATIONS

PROPELLERS

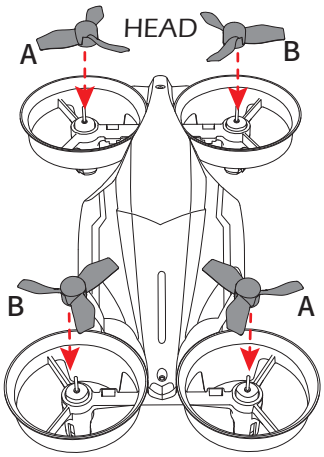

Installation: As depicted above, an "A" or "B" is printed on each propeller. Put each propeller onto the correct motor shaft and press it into place.

- The propellers are installed before the drone is packaged at the factory.
- The drone will not fly unless the correct propeller is installed on the correct motor shaft.

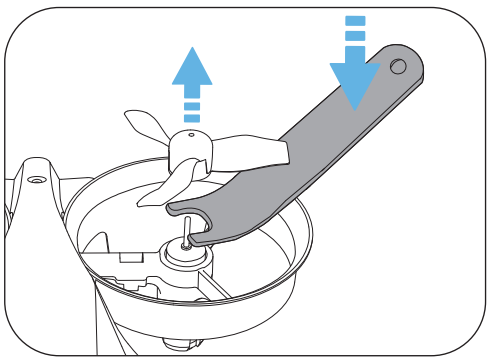

Removal: Insert the propeller spanner between the propeller and the motor. Be sure to hold the motor while detaching the propeller.

PRE-FLIGHT PREPARATIONS

All of the following operations in this manual use MODE 2.

PAIRING

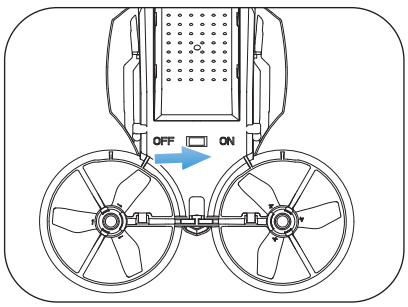

① Slide the Power Switch button to the right to turn on the drone.

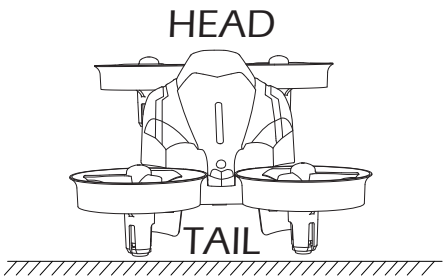

② Place the drone on a flat and level surface, with its head facing forward and its tail pointing towards the pilot.

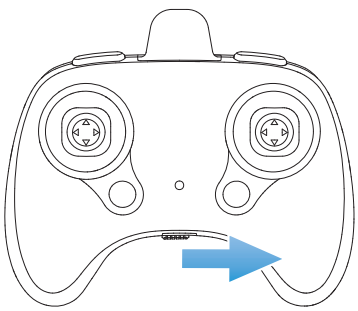

③ Turn on the transmitter.

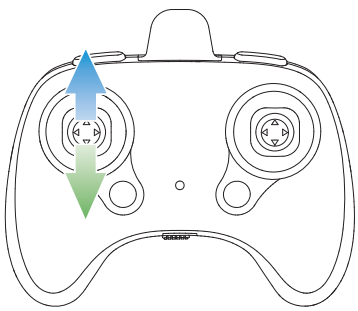

④ Push the left joystick up, then down, to pair the drone with the transmitter. The indicator lights on the drone will turn solid if the drone is paired successfully.

This drone has two operating modes, the FLIGHT mode and the LAND mode.

FLIGHT

*** The FLIGHT mode enables the drone to fly in the air.**

ONE KEY TAKEOFF

There are two methods for takeoff.

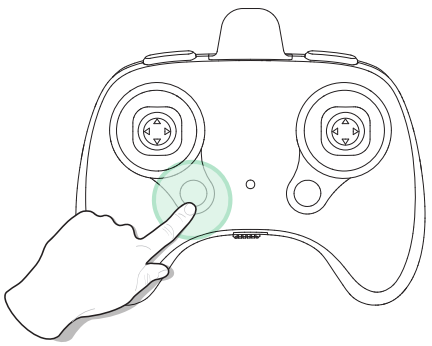

Method 1: Press the ( ) button, the drone will automatically take off and hover at 4 feet. At this time, you can control this drone using the joysticks.

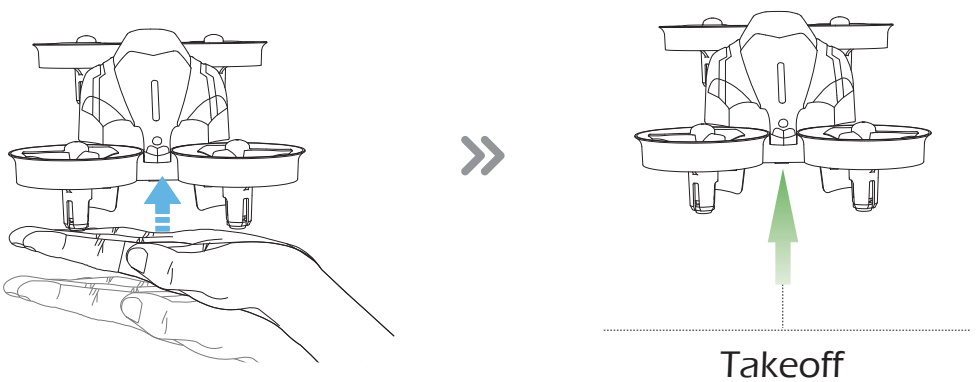

Method 2: After pairing, pick up the drone and lay it flat on your palm. Gently toss the drone into the air, and it will hover in place.

FLIGHT

ONE KEY LANDING

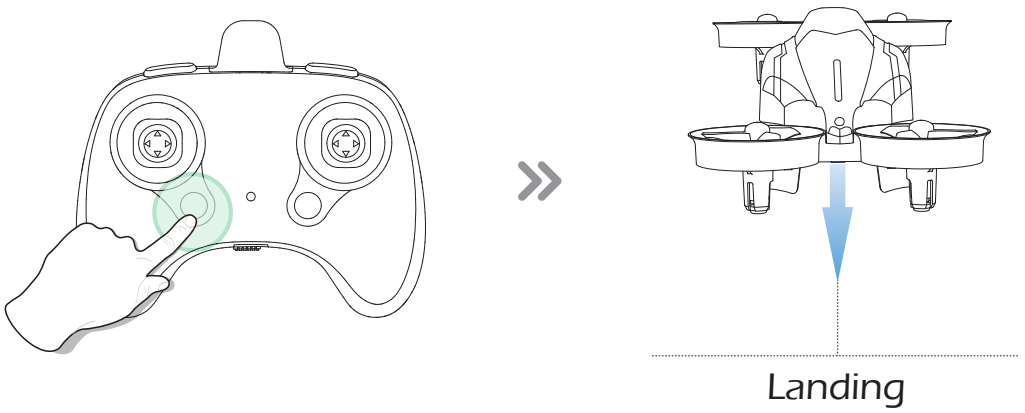

When in flight, you can press the ( ) button, the drone will land automatically.

You must keep your drone in visual line of sight all the time. If you can't see it, you can't control it.

FLIGHT FUNCTIONS

SPEED SWITCH

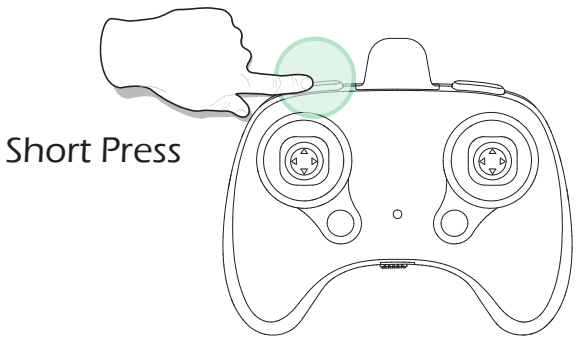

This drone comes with 3 speed modes (Low/Medium/High). Short press the (High/Low) button to switch between low, medium, and high speed. The transmitter beeps once to indicate Low Speed, twice to indicate Medium Speed and three times to indicate High Speed. (The Low Speed is the default speed mode.)

LIGHT SWITCH

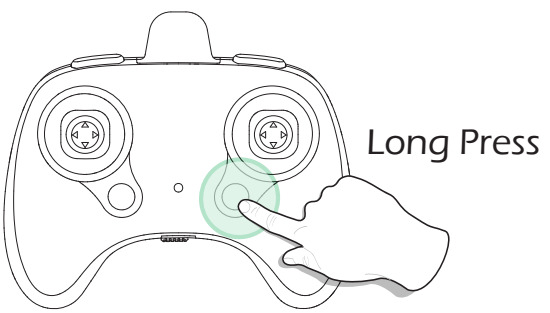

Long press the Light Switch ( ) button once to change the light state. Every time the light state changes, the transmitter will long beep once.

State 1: The drone indicator lights flash.

State 2: The drone indicator lights are off.

State 3: The drone indicator lights are on.

FLIGHT FUNCTIONS

360° FLIP

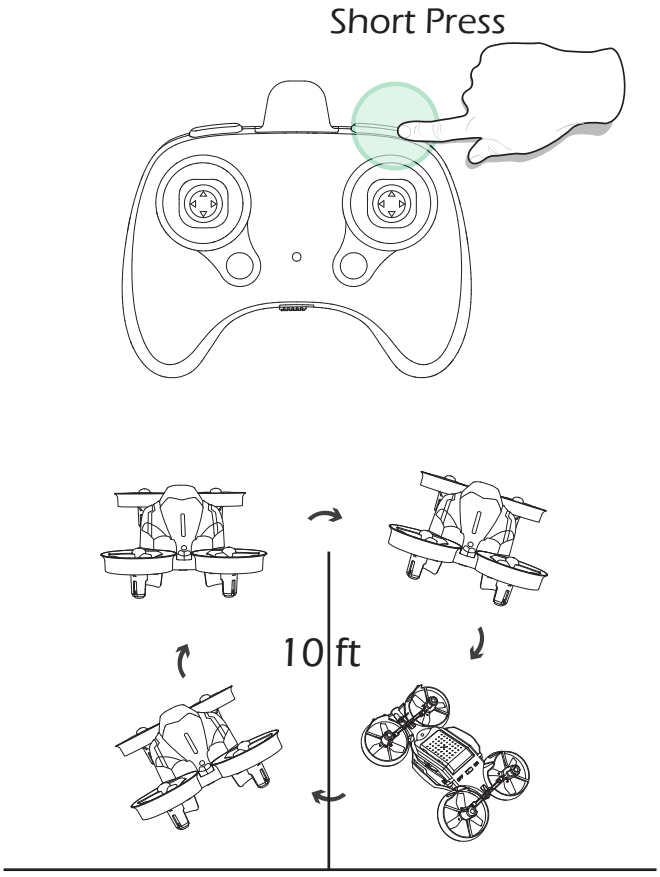

After you get familiar with all the functions of the drone, you can try this amazing flip mode. When the drone is at least 10ft from the ground, press down the (360°) button, then push the right joystick forward/backward or leftward/rightward. The drone will do a flip toward the corresponding direction.

360°Flip functions better when the battery is fully charged.

FLIGHT FUNCTIONS

HEADLESS MODE

The Headless Mode is a great training tool for beginner pilots. It is also useful when the drone is too far from the pilot (which makes it difficult to tell its orientation). It keeps the drone traveling forward, backward, left, or right when you move the right joystick in those directions, regardless of which way the front of the head of the drone points to.

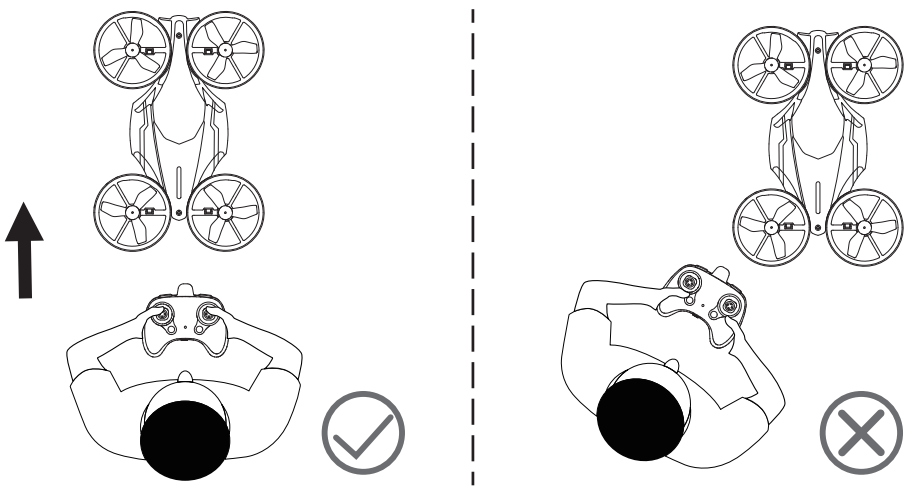

The pilot should stay facing the same direction that the drone's head points to when it takes off.

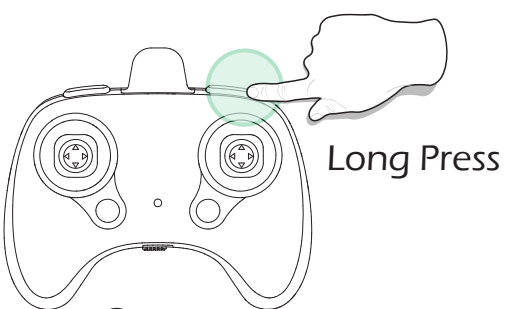

Entering: Long press the (360°) button on the transmitter. The transmitter will beep continuously, which indicates the drone is in Headless Mode.

Exiting: Long press the (360°) button on the transmitter again, and you will hear a long beep which indicates the drone exits the Headless Mode.

FLIGHT FUNCTIONS

* Why is the orientation of the drone important?

In normal flying mode, the control of the drone movement can sometimes be counter-intuitive for beginners. For instance, when the drone is in the air with its head pointing to your right, if you push the right joystick forward, the drone will fly to your right, instead of flying forward.

With the headless mode, the drone has a fixed "head." In Headless Mode, the drone always remembers the side its head points to during takeoff as the front side. This means that if the drone takes off with its head pointing forward, it doesn't matter how the drone is oriented in the air, when you push the right joystick forward, the drone will fly forward. Or, when its head is pointing to you, if you push the right joystick to the left, the drone will fly to your left.

AITITUDE-HOLD FUNCTION

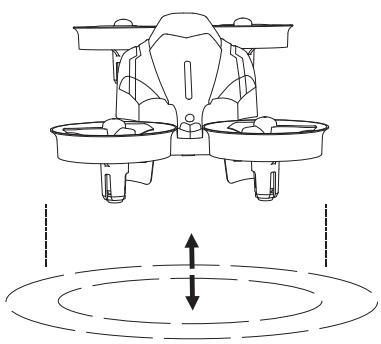

The drone is designed with altitude-hold function so the drone can maintain its altitude after you release the left joystick (the left joystick will automatically spring back to the middle).

FLIGHT FUNCTIONS

EMERGENCY STOP

⚠ The Emergency Stop function should only be used in case of emergency during the flight to avoid any damage or injury.

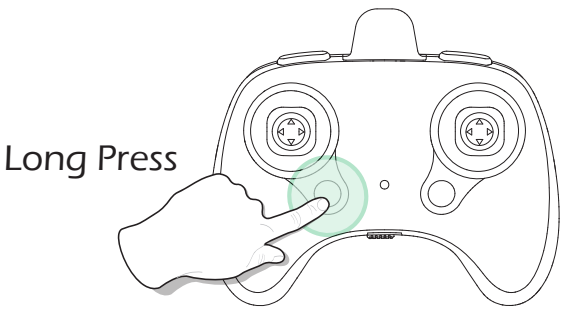

① Long press the ( ) button on the transmitter, the motors will stop immediately. Be aware that you risk breakage of the drone if it falls a large distance or hits anything at a high rate of speed.

② After the drone hits the ground, the drone indicator lights will keep on flashing. Please put the drone on a level surface again, and push the left joystick downward. This will reset the gyro. The indicator lights then turn from flashing to solid, which indicates that you can use the drone now.

THE LAND MODE

*** In Land mode, the drone just glide over the floor when moving.**

1. Only use the LAND mode on an area that is flat, clean, smooth and free of obstacles.
2. Be sure to remove any dust, hairs or, other debris on the drone before using the LAND mode. Otherwise, the movements of the drone will be affected.

BASIC OPERATIONS

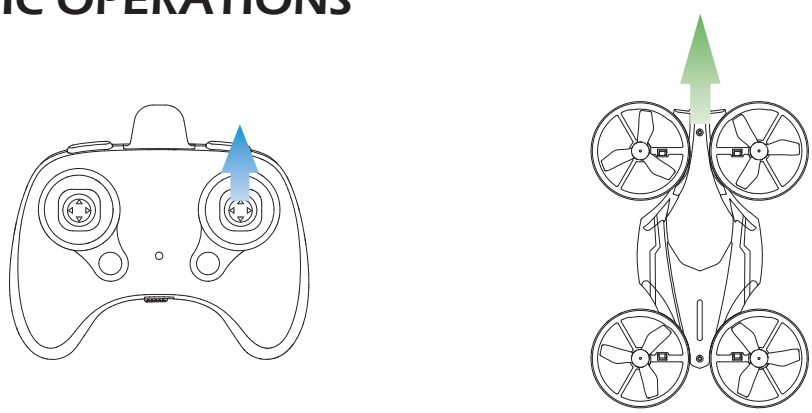

Push the right joystick up after the pairing. The drone will move forward on the ground.

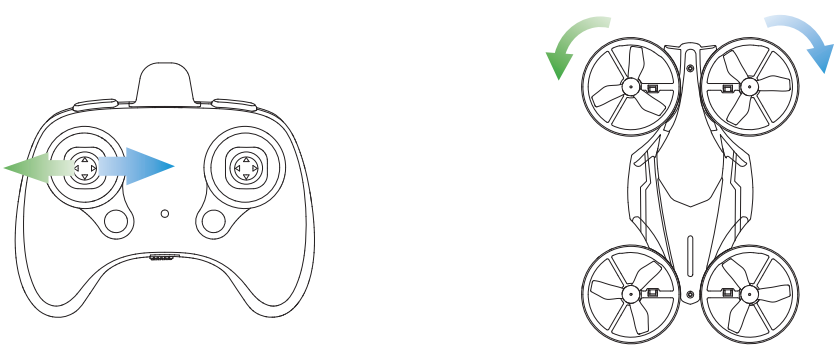

Simultaneously push the left joystick to the left or to the right to steer the drone.

THE LAND MODE

360° ROTATION

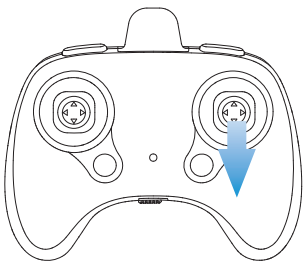

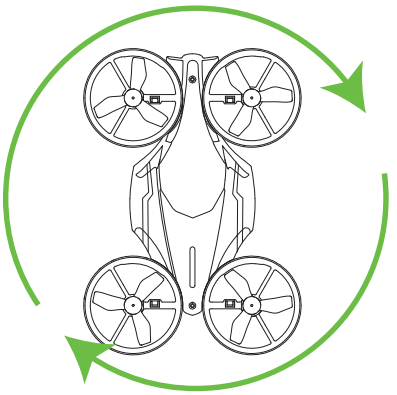

After the pairing, push the right joystick downward and hold it there. The drone will start to spin on the ground. Release the right joystick to stop this function.

FIXED SPEED CRUISE

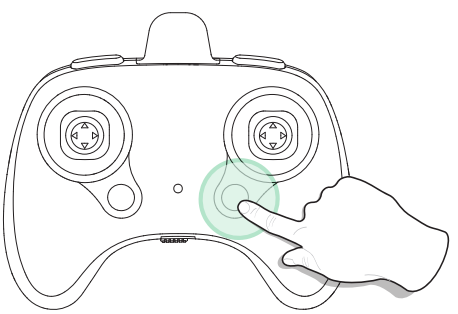

Short press the ( ) button, the transmitter beeps once. The drone starts to moving towards the direction its head pointing to at a fixed speed. The pilot can push the left joystick to the left or to the right, to steer the drone. Short press the ( ) button again to exit this mode.

ATTITUDE ADJUSTMENT

TRIMMER

If the drone drifts or is unstable in the air when there is no wind at all, you can use the trim function to stabilize the drone.

The Forward Trim

If the drone tends to drift forward:

1. Press down on the left joystick. The indicator light on the transmitter will start to flash quickly, which means you can use the trim function now;
2. Push the right joystick backward several times until the drone stabilizes, i. e. stop drifting forward;
3. Push down on the left joystick again. The indicator light on the transmitter turns from flashing quickly to solid, indicating that you have exited the trim function.

* You can also fix the Backward/Sideward Trim using a similar method, i.e., pushing the right joystick to the direction opposite the drift.

ATTITUDE ADJUSTMENT

CALIBRATE THE GYRO

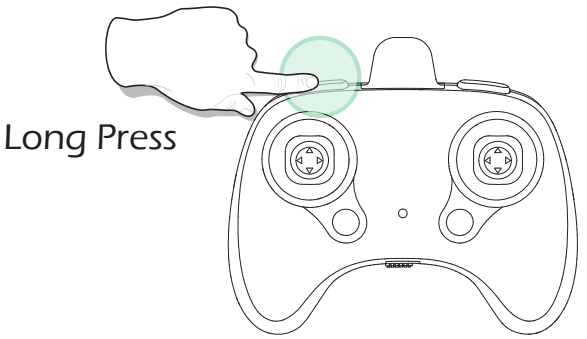

Make sure to place the drone on a level surface before calibrating the gyro. Long press the (High/Low) button for 2 Seconds to calibrate the gyro. The transmitter will beep once, which indicates that the calibration is completed.

Flying for too long or crashing may result in a severe drift of the drone. When this happens, please first try the trim function to fix the drift. Only when this previous attempt fails should you resort to the gyro-calibration to stabilize the drone.

SPECIFICATIONS

DRONE

Model: HS210F

Weight: 35g/1.2oz

Max. Battery Life: 7 Min. (in the air only)

12 Min. (on land only)

Motor Model: 615

Operating Temperature Range: 14° to 104°F (-10° to 40°C)

Size: 122×82×40mm

DRONE BATTERY

Capacity: 300mAh

Voltage: 3.7V

Battery Type: Lithium-ion Polymer Battery

Charging Temperature Range: 41° to 104°F (5° to 40°C)

Charging Time: 50 Min. (depends on charging power and remaining battery power)

TRANSMITTER

Operating Frequency: 2420-2465 MHz

Flight Distance: 164 ft (outdoors and unobstructed)

Operating Temperature Range: 14° to 104°F (-10° to 40°C)

Battery Type: 3*1.5V AAA Battery (Not included)

USB CHARGING CABLE

Input: 5V/2A

Rated Power: ≤10 W

CONTACT US

Please do not hesitate to contact us if you need further support.

4:00 PM ~ 7:00 AM (PST)

usa@holystone.com (USA)
ca@holystone.com (CA)
eu@holystone.com (EU)
jp@holystone.com (JP)

+1(855) 888-6699

For online support, please scan
this code with Live Chat

GENERAL INFORMATION

FCC Notice:
This device complies with Part 15 of the FCC Rules.
Operation is subject to the following two conditions:
(1) This device may not cause harmful interference, and
(2) This device must accept any interference received, including interference that may cause undesired operation.

The Supplier's Declaration of Conformity is available at the following address:
https://www.holystone.com/Download/US/HS210F_FCC_sDoC.pdf.

NOTE: This equipment has been tested and found to comply with the limits for a Class B digital device, pursuant to Part 15 of the FCC Rules. These limits are set to provide reasonable protection against harmful interference in a residential installation. This equipment generates uses and can radiate radio frequency energy, if not installed and used in accordance with the instructions, it may cause harmful interference to radio communications. However, there is no guarantee that interference will not occur in a particular installation. If this equipment does cause harmful interference to radio or television reception, which can not be determined by turning the equipment off and on, the user is encouraged to try one or more of the following measures:
—Reorient or relocate the receiving antenna.
—Separation more distance between the equipment and receiver.
—Connect the equipment to an outlet on a circuit different from the receiver.
—Consult the dealer or an experienced radio/TV technician for help.

GENERAL INFORMATION

WARNING: Changes or modifications not expressly approved by the party responsible for compliance could void the user's authority to operate the equipment.

RF Exposure

The device has been evaluated to meet general RF exposure requirement. It can be used in portable exposure condition without restriction.

IC Notice:

This device complies with Canada Industry licence-exempt RSS standard (s).

Operation is subject to the following two conditions:

(1) this device may not cause interference; and

(2) this device must accept any interference. Including interference that may cause undesired operation of the device.

CAN ICES-003 (B)

Avis d'Industrie Canada

Le présent appareil est conforme aux CNR d'industrie Canada applicables aux appareils radio exem pts de licence L'exploitation est autorisée aux deux conditions suivantes:

1) l'appareil ne doit pas produire de brouillage; et

2) l'utillsateur de l'appareil doit accepterbrouillage radioélectrique subi meme si le brouillage est susceptible d'encompromettre le fonctionnement. mauvais fonctionnement de l'appareil. Cet appareil numériquie de la classe B est conforme à la norme NMB-003 du Canada.

GENERAL INFORMATION

CAN NMB-003 (B)

RF Exposure

Radiation Exposure Statement:

This equipment complies with IC radiation exposure limits set forth for an uncontrolled environment. This equipment should be installed and operated with a minimum distance of 20cm between the radiator & your body.

Déclaration d'exposition aux radiations:

Cet équipement est conforme aux limites d'exposition aux rayonnements IC établies pour un environnement non contrôlé. Cet équipement doit être installé et utilisé avec un minimum de 20 cm de distance entre lasource de rayonnement et votre corps.

HOW TO RECYCLE THIS PRODUCT

This symbol on the product or its documentation indicates that it MUST not be disposed of together with household waste.

Uncontrolled waste disposal may harm the environment or human health.

Please separate your device from other types of waste for recycling it responsibly.

This will help to foster the sustainable re-use of material resources.

We suggest you contact your retailer, inquire at your local town hall or business store to find out where and how the drone can be recycled.

GENERAL INFORMATION

BATTERY WARNING:

1. Failure to follow all the instructions may result in serious injury, irreparable damage to the battery may cause a fire, smoke or explosion as well.
2. Always check the battery's condition before charging or using it.
3. Please replace the battery if the battery is dropped or has any peculiar smell, overheating, discoloration, deformation or leakage happens.
4. Never use anything other than the approved LiPo charger to charge the battery. Always use a balancing charger for LiPo cells or a LiPo cell balancer. It is recommended that you use the one provided with the product.
5. The battery temperature must never exceed 60°C(140°F) otherwise the battery could be damaged or ignited.
6. Never charge the battery on a flammable surface, near flammable products or inside a vehicle (preferably place the battery on a non-flammable and non-conductive surface).
7. Never leave the battery unattended during the charging process. Never disassemble or modify the housing's wiring, or puncture the cells. Always ensure that the charger output voltage corresponds to the voltage of the battery. DO NOT short circuit the batteries.
8. Never expose the Li-Po battery to moisture or direct sunlight, or store it in a place where temperatures could exceed 60°C(car in the sun, for example).
9. Always keep it out of reach of children.
10. Improper battery use may result in a fire, explosion or other hazards.
11. Non-rechargeable batteries are not allowed to be recharged. Rechargeable batteries should be charged under adults' supervision.
12. DO NOT mix different types of batteries including the new and used ones.

GENERAL INFORMATION

13. Batteries MUST be inserted with the correct polarity.

14. The supply terminals MUST not to be short-circuited. Regular examination of transformer or battery charger for any damage to their cords, plugs, enclosures and other parts MUST be done. If there is damage, they MUST not be used until the damage has been repaired.

15. The packaging has to be kept since it contains important information.

16. This toy should only be connected to the equipment with symbol Class II.

EU RF Power(EIRP): <10 dBm (2420-2465 MHz)

Caution

1. The max operating of the EUT is 45°C, and shouldn't be lower than -10°C.

2. The device complies with RF specifications when the device used at 0mm from your body.

3. Declaration of Conformity.

GENERAL INFORMATION

We, Xiamen Huoshiquan Import & Export CO.,LTD
hereby, declare that the compliance of the essential requirements with the
Directive 2014/53/EU, the RoHS Directive 2011/65/EU and Safety Directive 2009/48/EC have been fully fulfilled on our product with indication below:
Product Name: Remote control four axis series
Model/Mark: HS210F/HolyStone
The Statement of compliance is available at the following address:
http://www.holystone.com/Download/CE/HS210F_EU_DOC.pdf

This product can be used among EU member states.

MANUFACTURER INFORMATION

Manufactured by
Xiamen Huoshiquan Import & Export CO.,LTD.
Address: Unit 1, Room 501, Hongxiang Building, No.258 Hubin Nan Road, Siming District, Xiamen, China
+1(855)888-6699

MADE IN CHINA(CN)