9.1. Replacing modules

CAUTION

Risk of damage to equipment or malfunction as a result of uncontrolled machine stop.

- The communication within the system is interrupted by the replacement of a module. If a process is running, this situation can result in an uncontrolled stop and damage to the installation or the product. Before replacement make sure the installation is in a suitable operating status.

The interlocking/locking module can be replaced only in combination with an overall system restart. On the disconnection of the module connection, the system enters into a fault state. The related module and all downstream modules remain inactive until the overall system is restarted (fault state).

9.2. Mounting submodules

CAUTION

Risk of damage to equipment or malfunction as a result of incorrect connection or a configuration change.

- It is only possible to use submodules of connection types P, K and N. Check the compatibility before installation. For information on the related connection type of a submodule, please refer to the sticker on the rear of the submodule or the data sheet for the related submodule. This is included with each submodule.
- Pay attention to the alignment of the submodule. See marking (a) in *Figure 10: Mounting submodule*. Submodules can also be installed rotated by 180°. The marking (a) always indicates the first position to be equipped. In the example, the emergency stop S1 is underneath.
- Make sure the pins on the submodule slide straight into the guide. Tighten the cover screws to 0.5 Nm.
- If you use a submodule, pay attention to the correct alignment of the modules in relation to the labeling fields on the connection module. Incorrect assignments can cause serious malfunctions in your installation.
- Make sure no foreign bodies, e.g. chips or wire enter the open slots on the submodule. These can cause short circuits or contact problems.
- Avoid touching the contacts on the underside of the submodule. Risk of ESD damage and contact problems due to soiling.
- Unused submodule slots must be fitted with a cover (e.g. order number 126372).

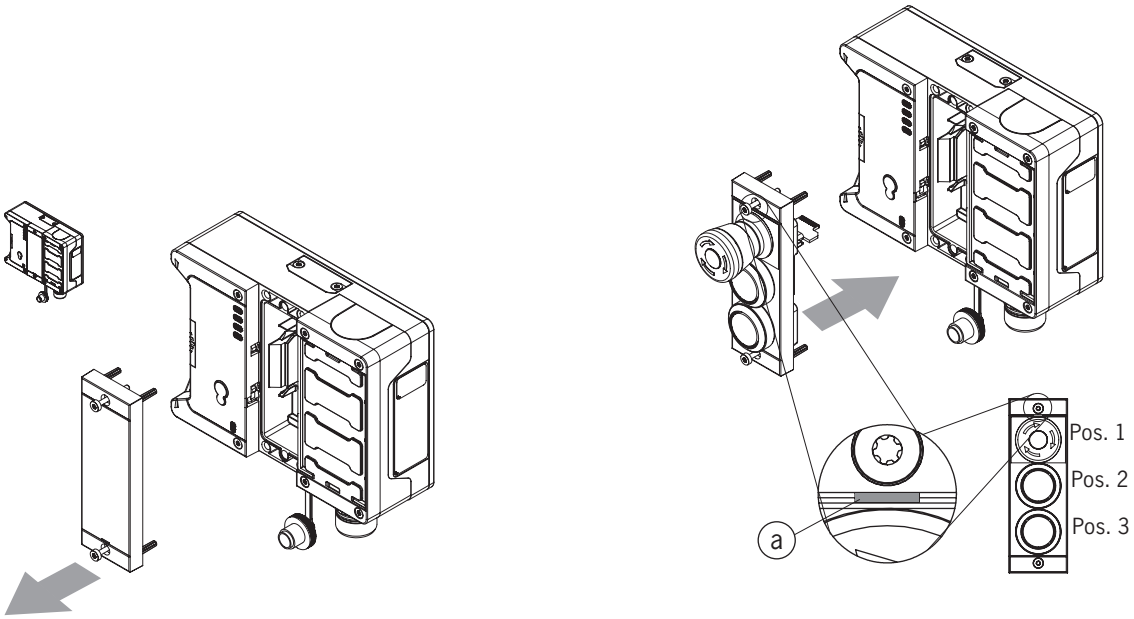

Figure 10: Mounting submodule

9.3. Replacing submodules

CAUTION

- The communication between submodule and locking module is interrupted by the replacement of a submodule. The submodule ceases to function. The function of the locking module, e.g. the safety outputs FO1A / FO1B, is not affected. If a process is running, the removal/replacement of a submodule can result in an uncontrolled stop and damage to the installation or the product. Before replacement make sure the installation is in a suitable operating status.

NOTICE

Pay attention to the information on the replacement of a submodule in the operating instructions for the related module. Correct function must be tested after replacement before the system enters normal operation again.

The replacement of submodules MSM while in operation is also possible (pay attention to safety instruction above). As soon as the system detects a compatible submodule, the submodule is ready for operation.

If an incompatible submodule is installed, the Slot 1 LED illuminates red.

9.3.1. Replacing submodule with a submodule with a different function (changing configuration)

The usage of a different submodule will change the function and as a result the terminal assignment (see data sheet for the submodule). Take into account the changes in your wiring and control system.

EN

9.3.2. Fitting and removing lenses and labels for controls and indicators

Fitting

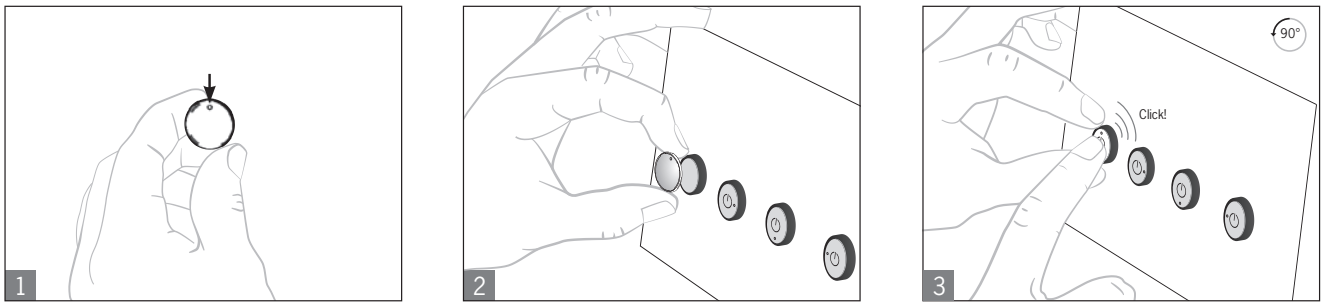

Removing

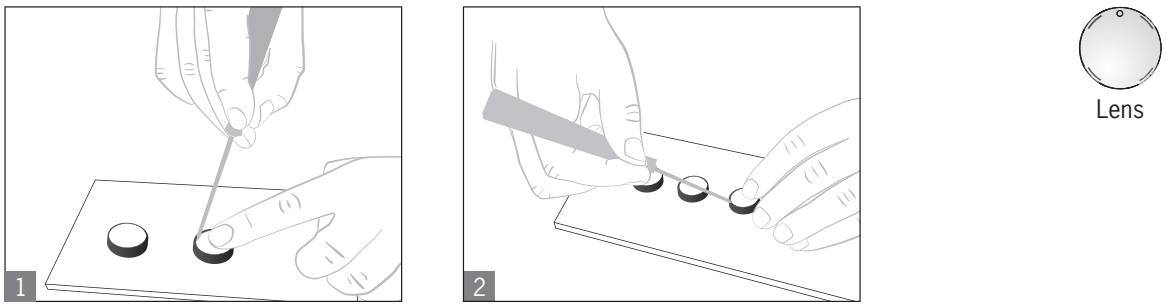

9.4. Changing direction of connection

⚠	**CAUTION** Risk of damage to equipment or malfunction as a result of uncontrolled machine stop. ‣ The direction of connection can be changed after removing the covers and fitting them rotated by 180°. ‣ The communication within the system is interrupted if the internal wiring is changed. If a process is running, this situation can result in an uncontrolled stop and damage to the installation or the product. Before replacement make sure the installation is in a suitable operating status.

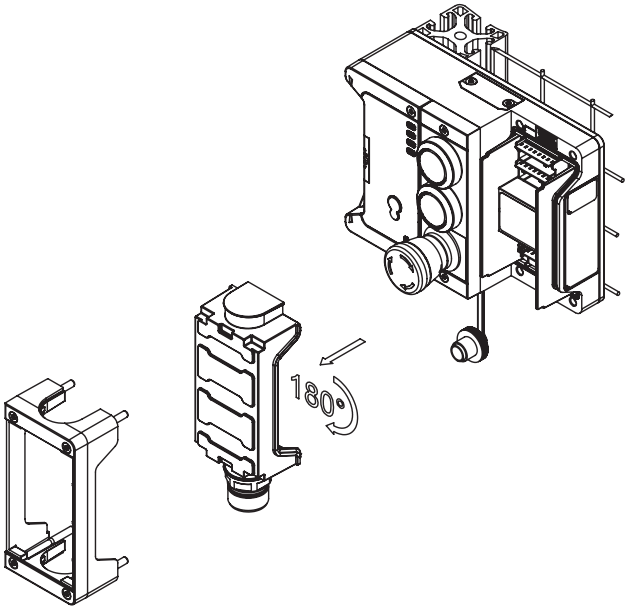

Figure 11: Changing direction of connection

10. Changing the door hinge position

10.1. Changing the interlocking/locking module to a different door hinge position

To change the interlocking/locking module for doors with a different door hinge position, the module only needs to be rotated by 180°. Submodules installed in the module can also be rotated by 180° (see section *9.1. Replacing modules on page 22*).

10.2. Changing actuating direction of the handle module

(Here: from right to left)

ⓘ	**Important!** It is possible to make this change only when the bolt tongue is not extended and an escape release is not yet mounted.

As supplied, the handle module is set either for doors hinged on the right or for doors hinged on the left.

Based on the example of a handle module for doors hinged on the right this means:

- The guard opens by pressing down the door handle.
- The system is mounted the other way up for doors hinged on the left. In other words, the guard opens by pressing up the door handle (see *Figure 12*). For this reason the actuating direction of the door handle must be changed (see *Figure 12* to *Figure 17*).

(Similarly on handle modules for doors hinged on the left)

EN

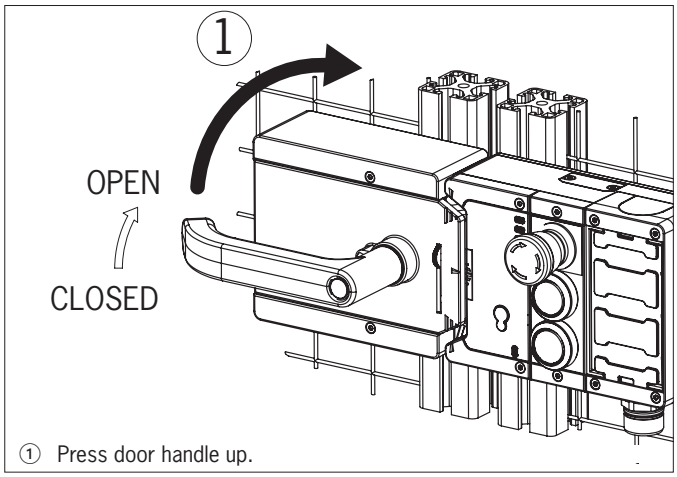

Figure 12: Changing actuating direction, step ①

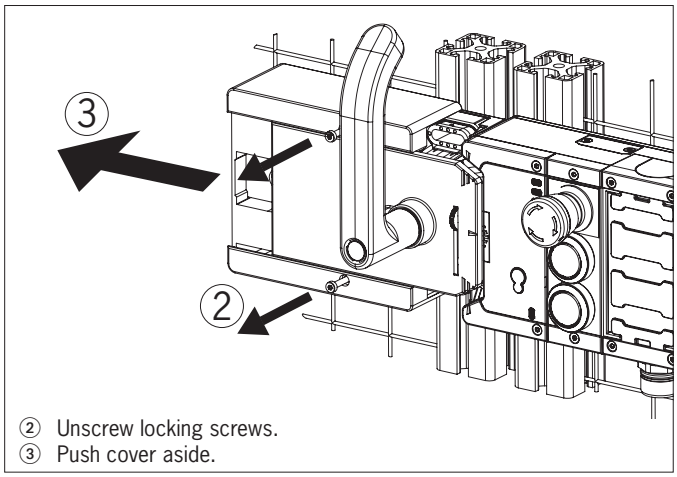

Figure 13: Changing actuating direction, steps ② and ③

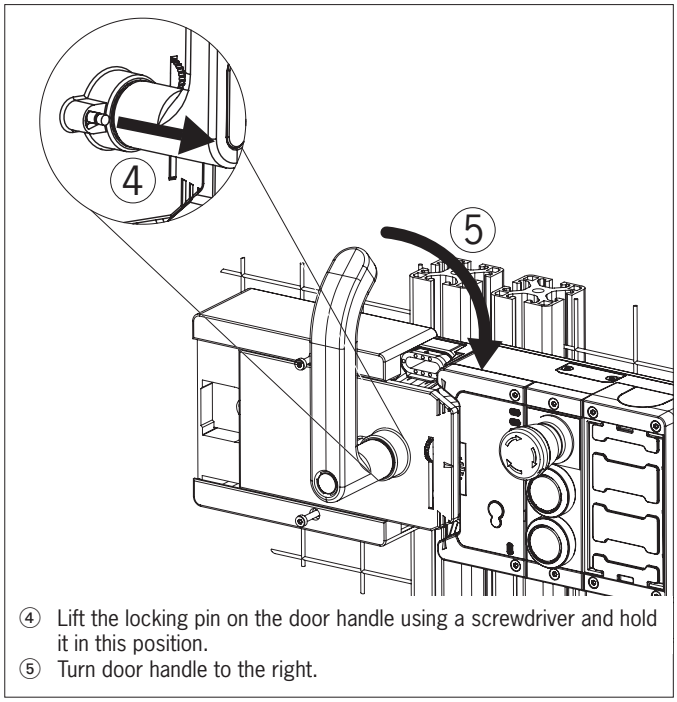

Figure 15: Changing actuating direction, steps ④ and ⑤

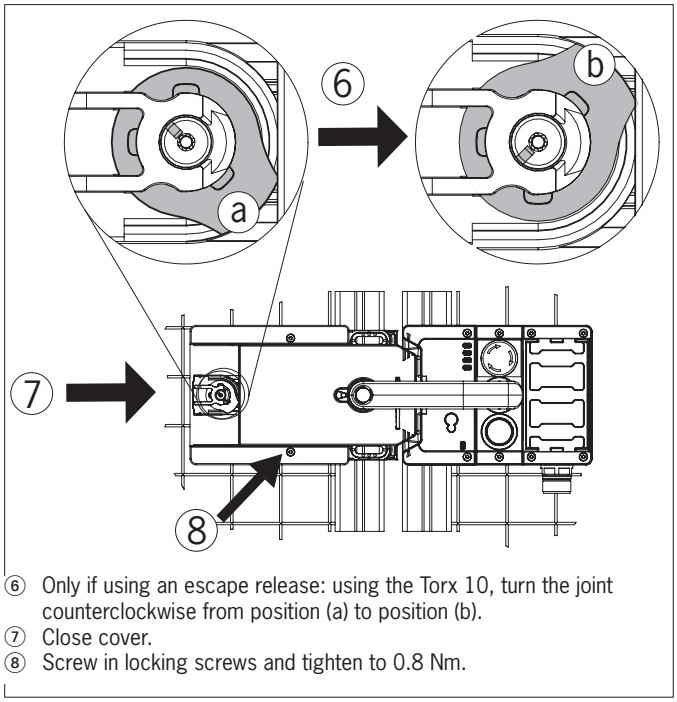

Figure 14: Changing actuating direction, steps ⑥ to ⑧

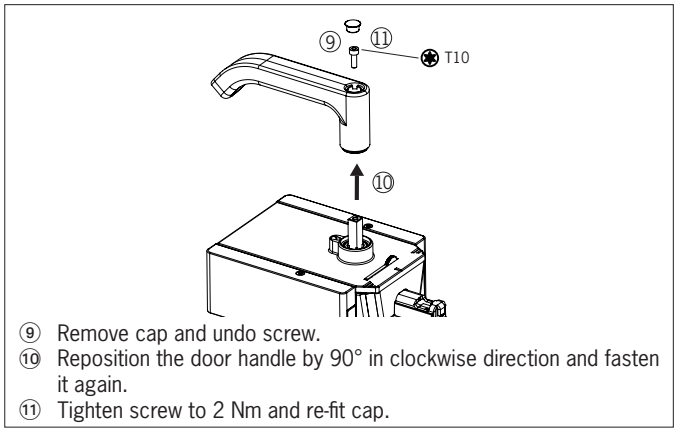

Figure 17: Changing actuating direction, steps ⑨ and ⑪

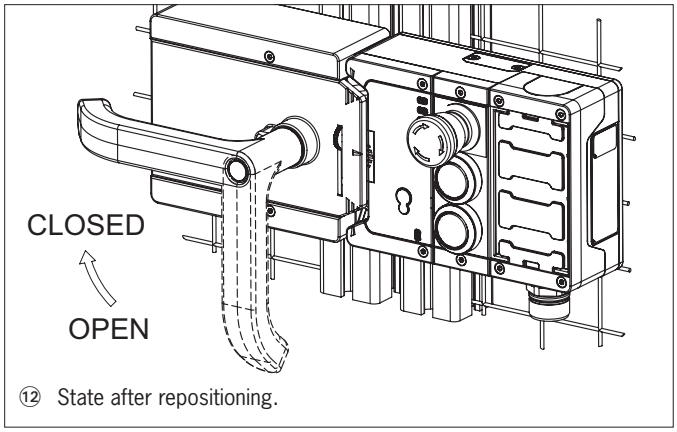

Figure 16: Changing actuating direction, final state

11. Protection against environmental effects

Lasting and correct safety function requires that the system must be protected against foreign bodies such as swarf, sand, blasting shot, etc., which can become lodged in the housing.

Pay attention to the following measures:

- Seal unused connections using the covers provided.
- Make sure the housing covers are correctly sealed and the cover screws are tightened to the necessary tightening torque.
- Cover the device during painting work.

12. Controls and indicators

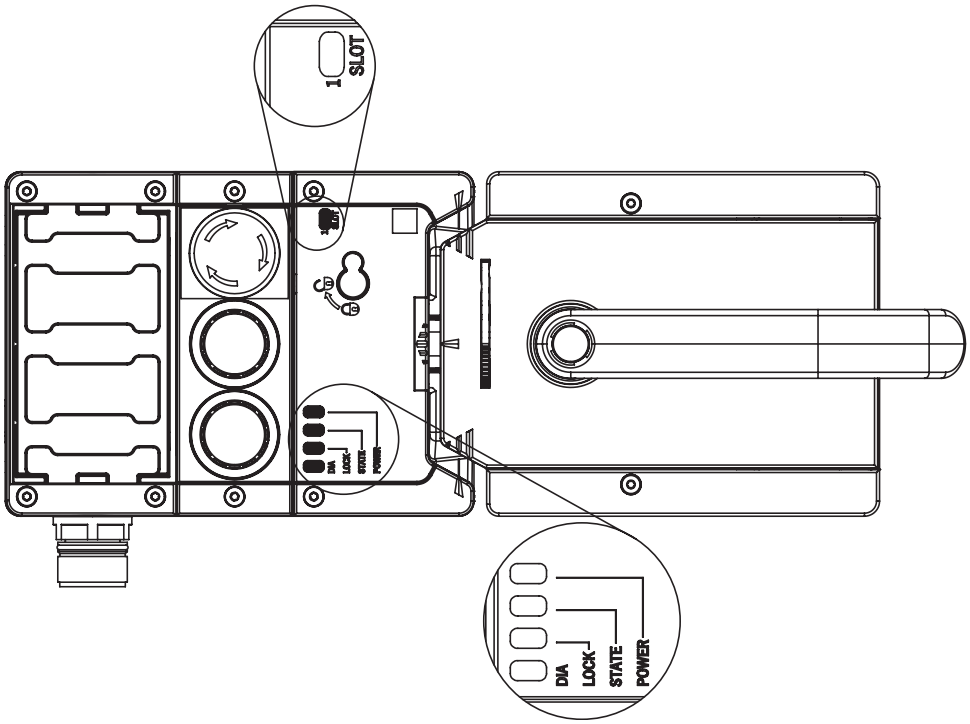

Figure 18: Indicators and controls

LED	Description
POWER	Illuminated if power supply correct Color: green
STATE	Indicates the device state Color: green
LOCK	Indicates the state of the guard locking Color: yellow
DIA	Indicates faults Color: red
SLOT 1	Indicates the status of the submodule Color: red/green

EN

13. Electrical connection

WARNING

If there is a mistake, loss of the safety function due to incorrect connection.

- To ensure safety, both safety outputs (FO1A and FO1B) must always be evaluated.
- The monitoring outputs must not be used as safety outputs.
- Lay the connecting cables with protection to prevent the risk of short circuits.

CAUTION

Risk of damage to equipment or malfunctions as a result of incorrect connection.

- The inputs on an evaluation unit connected must be positive-switching, as the two outputs on the safety switch deliver a level of +24 V in the switched-on state.
- All the electrical connections must either be isolated from the mains supply by a safety transformer according EN IEC 61558-2-6 with limited output voltage in the event of a fault, or by other equivalent isolation measures.
- All electrical outputs must have an adequate protective circuit for inductive loads. The outputs must be protected with a free-wheeling diode for this purpose. RC interference suppression units must not be used.
- Power devices which are a powerful source of interference must be installed in a separate location away from the input and output circuits for signal processing. The cable routing for safety circuits should be as far away as possible from the cables of the power circuits.
- To prevent EMC problems, it is imperative you follow the chapter *13.6. Notes on cable laying on page 31*. Follow EMC notes on devices in the immediate vicinity of the MGB2 system and their cables.
- In order to avoid EMC interference, the physical environmental and operating conditions at the installation site of the device must comply with the requirements according to the standard DIN EN 60204-1:2006, section 4.4.2/EMC.

Important!

- If the device does not appear to function when the operating voltage is applied (e.g. green Power LED does not illuminate), the safety switch must be returned to the manufacturer.
- To ensure the stated degree of protection is achieved, the cover screws must be tightened to a tightening torque of 1 Nm.
- Tighten screw for the cover for the auxiliary release to 0.5 Nm.

13.1. Using submodules

Each interlocking/locking module can contain one submodule. For an exact description of the individual submodules as well as information on compatibility, please refer to the data sheet for the related submodule. This is included with each submodule.

Important!

- In the modules described here it is only allowed to install submodules of connection types P, K and N. For information on the related connection type of a submodule, please refer to the sticker on the rear of the submodule or the data sheet for the related submodule. This is included with each submodule.
- On using a submodule, pay attention to the correct alignment of the module in relation to the labeling fields on the connection submodule. Incorrect assignments can cause serious malfunctions in your installation.
- Unused submodule slots must be fitted with a cover (e.g. order number 126372).
- Avoid touching the contacts on the underside of the submodule. Risk of ESD damage and contact problems due to soiling.

13.2. Notes about c UL us

Important!

- For use and operation as per the c UL us requirements [1], a power supply with the feature "for use in class 2 circuits" must be used. The same requirement applies to the safety outputs.
  Alternative solutions must comply with the following requirements:
  a) Electrically isolated power supply unit with a max. open-circuit voltage of 30 V/DC and a limited current of max. 8 A.
  b) Electrically isolated power supply unit in combination with fuse as per UL248. This fuse should be designed for max. 3.3 A and should be integrated into the 30 V DC voltage section.
- The mounting of conduits directly on the MGB2 is not allowed. Cables are allowed to be connected only via suitable cable glands. For this purpose use EUCHNER cable gland of type EKPM20/06U. Equivalent cable glands can be used if they are UL-listed (QCRV) and are suitable for the related cable diameter (22 AWG – 17 AWG).

1) Note on the scope of the UL approval: Only for applications as per NFPA 79 (Industrial Machinery).
The devices have been tested as per the requirements of UL508 (protection against electric shock and fire).

13.3. Safety in case of faults

- The operating voltage UB is reverse polarity protected.
- The safety outputs FO1A/FO1B are short circuit-proof.
- A short circuit between FI1A and FI1B or FO1A and FO1B is detected by the device.
- A short circuit in the cable can be excluded by laying the cable with protection.

EN

13.4. Fuse protection for power supply

The power supply must be provided with fuse protection depending on the number of devices and current required for the outputs. The following rules apply:

Max. current consumption of an individual device I_{max}

I_{max} = $I_{UB} + I_{IMP} + I_{FO1A+FO1B}$

I_{UB} = Device operating current (80 mA) + monitoring outputs (4 x max. 50 mA) + controls

$I_{FO1A+FO1B}$ = Load current of safety outputs FO1A + FO1B (2 x max. 150 mA)

I_{IMP} = Solenoid (max. 375 mA)

BR

Max. current consumption of a switch chain Σ I_{max} with star wiring

$\Sigma I_{max} = I_{FO1A+FO1B} + n \times I_{UB} + n \times$ monitoring outputs $+ n \times I_{IMP}$

n = Number of connected devices

Assignment of the currents to the fuse circuits

Current	Fuse circuit F1	Fuse circuit F2
I_{UB}	80 mA $I_{OD,OT,OL,OI}$ = (4 x max. 50 mA) $I_{controls}$ = max. 10 mA (per control) $I_{indicators}$ = max. 5 mA (per indicator)	
$I_{FO1A+FO1B}$	(2 x max. 150 mA)	
I_{IMP}		$I_{solenoid}$ = 375 mA

13.5. Requirements for connection cables

CAUTION

Risk of damage to equipment or malfunctions as a result of incorrect connection cables.

- On the usage of other connection components, the requirements in the following table apply. EUCHNER provides no warranty for safe function in case of failure to comply with these requirements.

Observe the following requirements with respect to the connection cables:

Parameter	Value	Unit
Conductor cross-section, min.	0.25	mm^2
R max.	60	Ω/km
C max.	120	nF/km
L max.	0.65	mH/km

13.6. Notes on cable laying

Lay all MGB2 connection cables in a common cable harness.

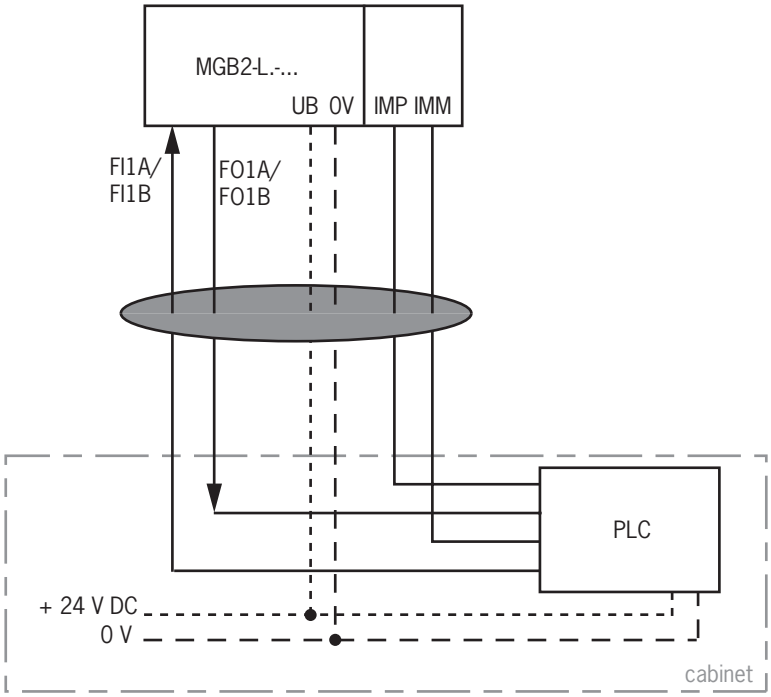

Important: lay cables in a common harness

Figure 19: Stipulated cable laying

EN

13.7. Changing device configuration (using DIP switches)

Tip!

You will find an animation on device configuration at www.euchner.com.

DIP switches

The devices can be configured using the DIP switches. The following settings are possible:

- Changing system family (BR/BP switching)
- Deactivating guard locking monitoring
- Activating release monitoring (possible only with active guard locking monitoring)

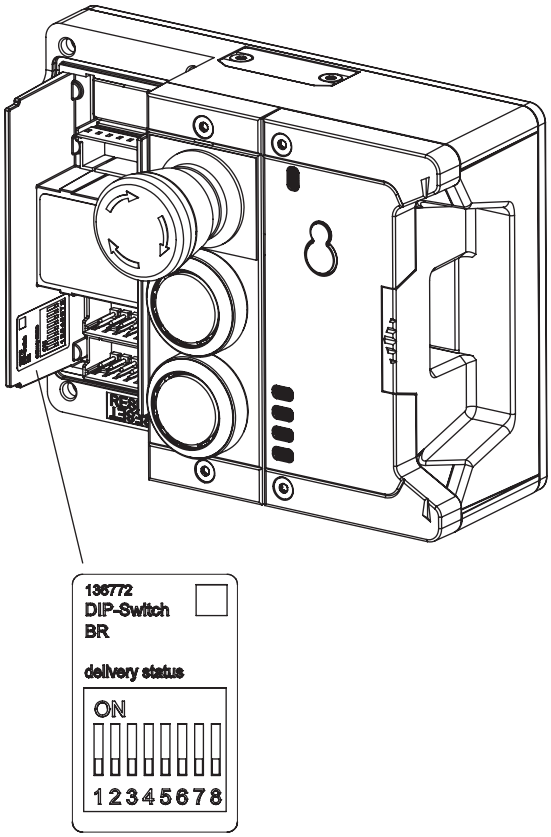

Position of the switches

Item	Description
1	DIP switch
2	Sticker with factory setting

Function of the switches

Switch	Function
1+4	On: Device is operated as BP system
	Off: Device is operated as BR system
2+5	On: Guard locking monitoring is deactivated
	Off: Guard locking monitoring is active (usually factory setting)
3	On: Release monitoring is activated
	Off: Release monitoring is deactivated (usually factory setting)
6	n.c.
7	On: Factory reset on
	Off: Factory reset off
8	On: Configuration possible
	Off: Configuration inhibited (factory setting)

13.7.1. Changing system family (BR/BP switching)

CAUTION

Malfunction due to incorrect configuration or incorrect connection.

- Note that the terminal assignment also changes on changing the configuration (see chapter *13.10. Terminal assignment and contact description on page 36*).

1. Switch off power supply.
2. Set DIP switches 1.4 and 8 as shown.

For change from BR => BP	For change from BP => BR
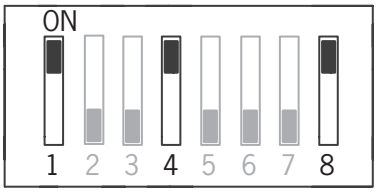	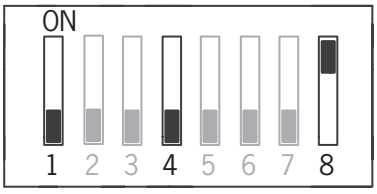

3. Switch on power supply for 5 s.

➡ The change is confirmed by the illumination of the Power LED. All other LEDs are off.

4. Switch off power supply and set DIP switch 8 to OFF.

➡ The next time the device is started, it operates in the operating mode set.

13.7.2. Deactivating guard locking monitoring

WARNING

Risk of injury due to inactive guard locking monitoring.

- When guard locking monitoring is inactive, the guard locking position does not influence the safety outputs. The guard can be opened immediately. This setting is not allowed to be used in applications in which, e.g., there is hazard due to overrunning machinery movement. With inactive guard locking monitoring, guard locking must be used only for process protection.

1. Switch off power supply.
2. Set DIP switches 2, 5 and 8 as shown.

Deactivating guard locking monitoring	Activating guard locking monitoring
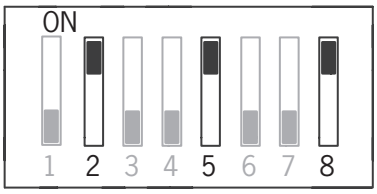	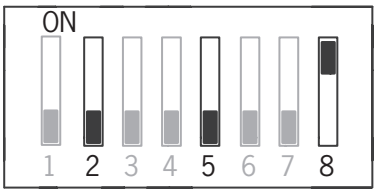

3. Switch on power supply for 5 s.

➡ The change is confirmed by the illumination of the Power LED. All other LEDs are off.

4. Switch off power supply and set DIP switch 8 to OFF.

➡ The next time the device is started, it operates in the operating mode set.

13.7.3. Activating release monitoring

NOTICE

When release monitoring is active, the system enters into a latching fault when the escape release or auxiliary release is actuated.

See *System status table*, *signal sequence incorrect* status (DIA red, Lock flashes 1 time).

1. Switch off power supply.
2. Set DIP switches 3 and 8 as shown.

Deactivating release monitoring	Activating release monitoring
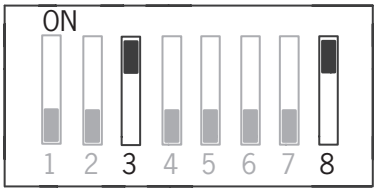	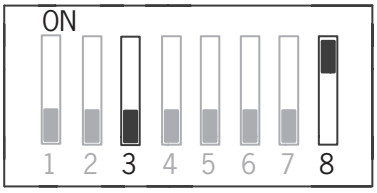

3. Switch on power supply for 5 s.

➡ The change is confirmed by the illumination of the Power LED. All other LEDs are off.

4. Switch off power supply and set DIP switch 8 to OFF.

➡ The next time the device is started, it operates in the operating mode set.

EN

13.8. Notes on operation with control systems

Please observe the following requirements for connection to safe control systems:

General notes

- Use a common power supply for the control system and the connected safety switches.
- A pulsed power supply must not be used for UB. Tap the supply voltage directly from the power supply unit. If the supply voltage is connected to a terminal of a safe control system, this output must provide sufficient electrical current.
- The safety outputs (FO1A and FO1B) can be connected to the safe inputs of a control system. Prerequisite: the input must be suitable for pulsed safety signals (OSSD signals, e.g. from light grids). The control system must tolerate test pulses on the input signals. This normally can be set up by parameter assignment in the control system. Observe the notes of the control system manufacturer. For the pulse duration of your safety switch, please refer to chapter *16. Technical data on page 48*.
- The inputs on an evaluation unit connected must be positive-switching, as the two outputs on the safety switch deliver a level of +24 V in the switched-on state.

BR

- Always connect inputs FI1A and FI1B directly to a power supply unit or to outputs FO1A and FO1B of another EUCHNER BR device (series connection). Pulsed signals must not be present at inputs FI1A and FI1B.
- The test pulses from AR devices can be used on the inputs. There is then no BR diagnostic function available.

The inputs on an evaluation unit connected must be positive-switching, as the two outputs on the safety switch deliver a level of +24 V in the switched-on state.

Guard locking control

- Test pulses up to max. 5 ms in duration at intervals of min. 100 ms are tolerated on IMP and IMM.

ⓘ	**NOTICE** Due to the fact that short circuit monitoring of the safety outputs FO1A/FO1B is performed by the device itself, the Performance Level in accordance with EN 13849 is not reduced if the control system pulsing is switched off.

ⓘ	**Tip!** A detailed example of connecting and setting the parameters of the control system is available for many devices at www.euchner.com in the area Download ➧ Applications ➧ MGB2. The features of the respective device are dealt with there in greater detail.

13.9. Connection of guard locking control

13.9.1. Guard locking control for devices with IMM connection

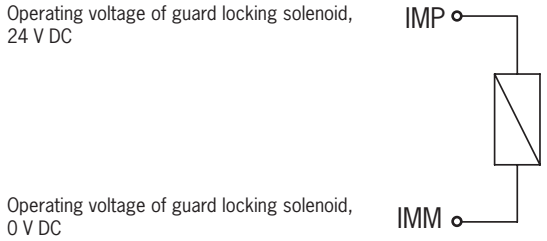

Figure 20: Connection example with IMM connection

13.9.2. Guard locking control for devices without IMM connection

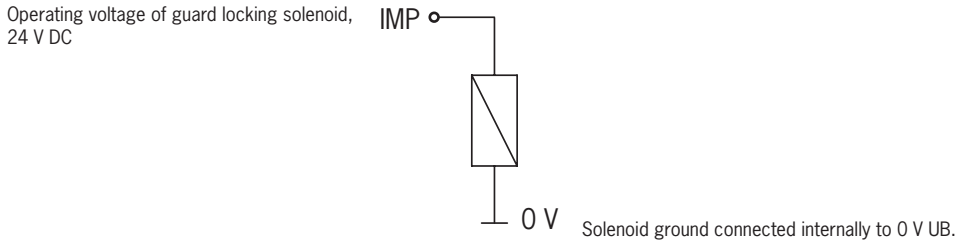

Figure 21: Connection example without IMM connection

EN

13.10. Terminal assignment and contact description

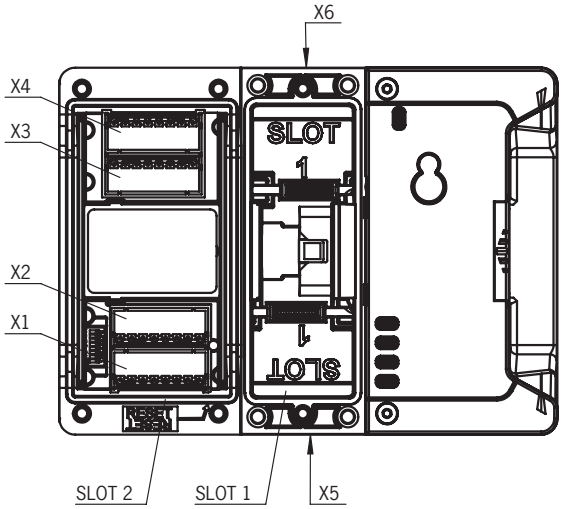

Figure 22: Connections and LEDs

Terminal	Designation	Description
X1.1	UB	Operating voltage of BR electronics, 24 V DC
X1.2	FI1A	Enable input for channel A If operated separately (BP), set DIP switch as per operating instructions.
X1.3	FI1B	Enable input for channel B If operated separately (BP), set DIP switch as per operating instructions.
X1.4	OT/C	Bolt tongue monitoring output ON when the door is closed and the bolt tongue is inserted into the locking module. Optional: BR diagnostic output
X1.5	OD	Door monitoring output ON when the door is closed.
X1.6	OL	Guard locking monitoring output ON when the door is closed and locked. (On MGB2-I, no function)
X1.7	OI	Monitoring output DIA ON when the device is in the fault state
X1.8	FO1A	Safety output channel A ON when door is closed and locked / interlocked. Attention: Pay attention to position of the DIP switch.
X2.1	0 V UB	Operating voltage of BR electronics, 0 V
X2.2	S2 1.2	See the enclosed data sheet for the submodule
X2.3	S2 2.2	
X2.4	S1 LED	
X2.5	S2 LED	
X2.6	S3 LED	
X2.7	RST	Reset input, device is reset if DC 24 V is applied to RST for min. 3 s.
X2.8	FO1B	Safety output channel B ON when door is closed and locked/interlocked. Attention: Pay attention to position of the DIP switch.
X3.1	IMP	Operating voltage of guard locking solenoid, 24 V DC
X3.2	IMM	Operating voltage of guard locking solenoid 0 V
X3.3	S1 1.1	See the enclosed data sheet for the submodule
X3.4	S1 2.1	
X3.5	S1 1.2	
X3.6	S1 2.2	
X3.7	S3 1.2	
X3.8	S3 2.2	
X4.1	S2 1.1	See the enclosed data sheet for the submodule
X4.2	S2 2.1	
X4.3	ZS 1.1	
X4.4	ZS 2.1	
X4.5	ZS 1.2	
X4.6	S3 1.1	
X4.7	S3 2.1	
X4.8	ZS 2.2	

Table 2: Terminal assignment and contact description

13.11. Terminal assignment, submodule with plug connector M23

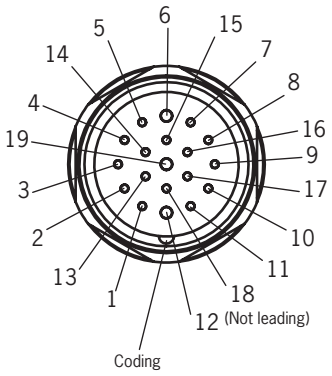

Figure 23: View of connection side, plug connector M23

Pin	Terminal	Designation	Description
1	X3.1	IMP	Operating voltage of guard locking solenoid, 24 V DC
2	X1.2	FI1A	Enable input for channel A If operated separately (BP), set DIP switch as per operating instructions.
3	X1.3	FI1B	Enable input for channel A If operated separately (BP), set DIP switch as per operating instructions.
4	X1.8	FO1A	Safety output channel A ON when door is closed and locked / interlocked. Attention: Pay attention to position of the DIP switch.
5	X2.8	FO1B	Safety output channel B ON when door is closed and locked/interlocked. Attention: Pay attention to position of the DIP switch.
6	X1.1	UB	Operating voltage of BR electronics, 24 V DC
7	X2.7	RST	Reset input, device is reset if DC 24 V is applied to RST for min. 3 s.
8	X1.4	OT/C	Bolt tongue monitoring output ON when the door is closed and the bolt tongue is inserted into the locking module. Optional: BR diagnostic output
9	X1.7	OI	Monitoring output DIA ON when the device is in the fault state
10	X3.3		See the enclosed data sheet for the submodule
11	X3.5		
12	–	n.c.	Not used
13	X3.4		See the enclosed data sheet for the submodule
14	X3.6		
15	X2.2		
16	X2.5		
17	X3.7		
18	X2.6		
19	X2.1	0 V UB	Operating voltage of BR electronics, 0 V
	X3.2	IMM	Operating voltage of guard locking solenoid 0 V

Table 3: Terminal assignment and contact description

EN

13.12. Operation as separate device

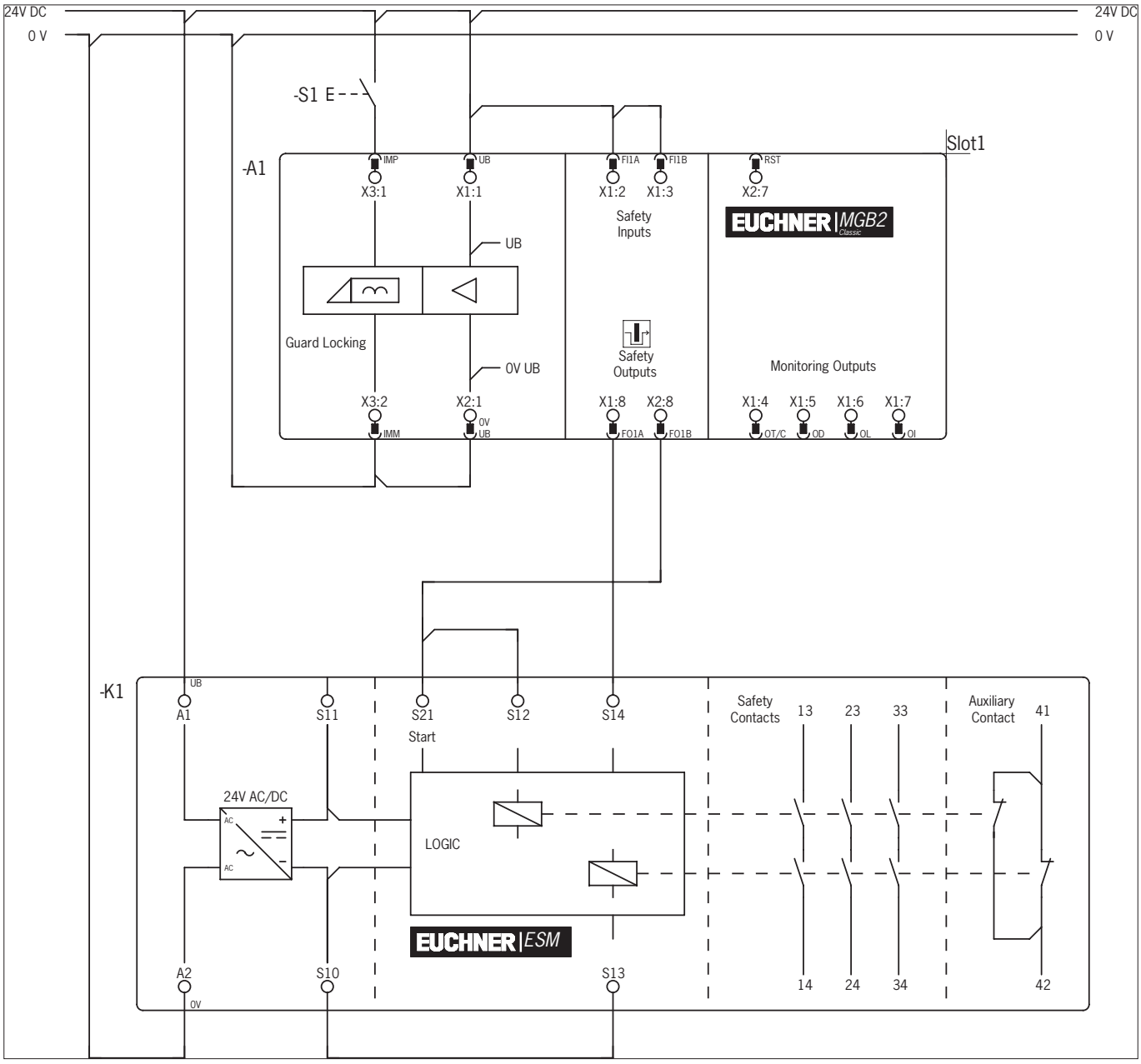

Figure 24: Connection example for separate operation

The switches can be reset via the RST input. For this purpose, a voltage of 24 V (± permissible tolerances) must be applied to the input for t > 3 sec. During the time which this voltage is present on the input, all LEDs and outputs (door monitoring and safety outputs) are switched off. The device restarts on the falling edge of the voltage.

13.13. Information on operation in a BR switch chain

BR

13.13.1. System times

The locking module has longer reaction times than a CES-BR switch (see chapters *16. Technical data on page 48* and *16.2. Typical system times on page 50*).

13.13.2. Wiring a BR switch chain

To prevent earth loops, the wiring should be in a star configuration (see *Figure 25*).

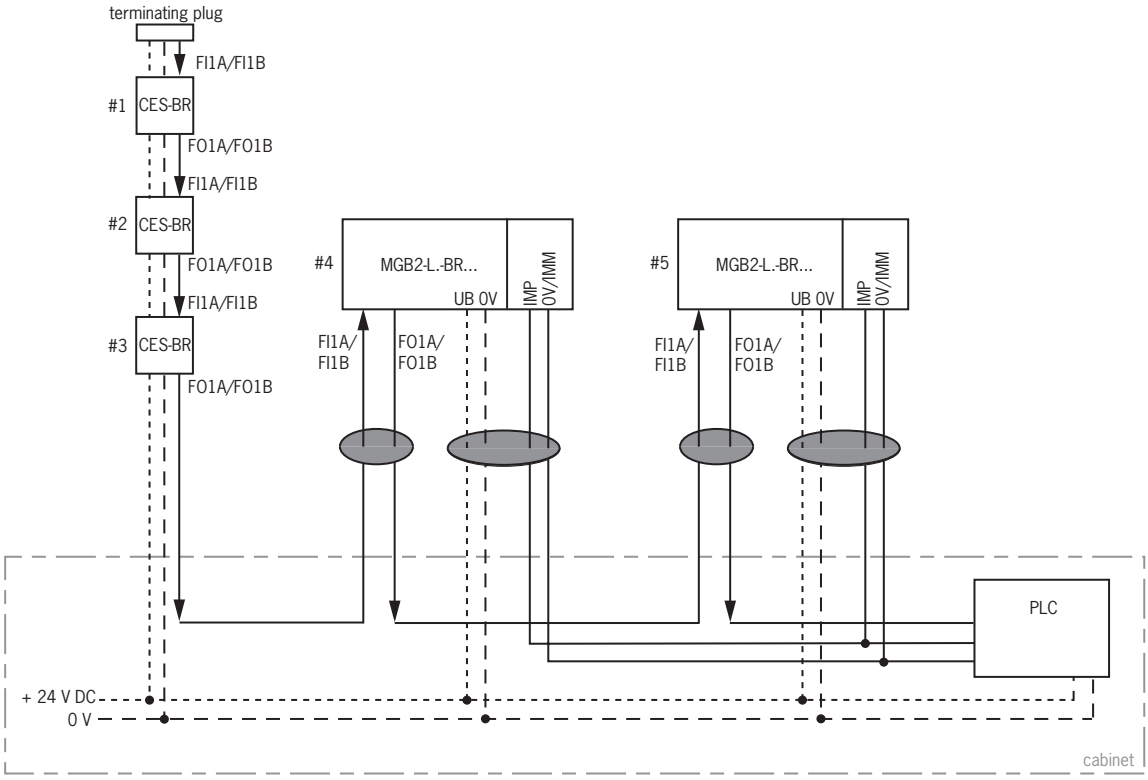

Important: lay cables in a common harness

Figure 25: Central wiring of a BR switch chain in the control cabinet

13.13.3. Number of devices in switch chains

In a pure MGB2 switch chain a maximum of ten devices can be connected in series. In mixed switch chains (e.g. MGB2 together with CES-BR) the maximum number of devices is also ten.

13.13.4. Resetting in switch chains

ℹ	**Important!** Use the reset input (RST) for resetting in BR switch chains. All devices in the chain must be reset simultaneously. Resetting individual switches will result in faults.

EN

14. Setup

14.1. Teach-in operation (only for MGB2 unicode)

The handle module must be assigned to the locking module using a teach-in function before the system comprising locking module and handle module forms a functional unit.

During a teach-in operation the safety outputs are switched off.

Important!

- The locking module disables the code for the previous handle module if teach-in is carried out for a new handle module. Teach-in is not possible again immediately for this handle module if a new teach-in operation is carried out. The disabled code is deleted in the locking module only after a third code has been taught-in.
- The locking module can be operated only with the last handle module taught.
- If, in the teach-in standby state, the locking module detects the taught-in handle module, the teach-in standby state is ended immediately and the locking module changes to normal operation.
- If the bolt tongue is in the operating distance for less than 30 s, the handle module is not taught.

Teaching in handle module

1. Fit handle module.
2. Close guard. Check for correct alignment and distance using the marking on the locking module and re-adjust if necessary.
3. Insert bolt tongue in the locking module.
4. Apply operating voltage to the locking module, optionally connect teach-in adapter.

➡ The green LED (State) flashes quickly (approx. 5 Hz). A self-test is performed during this time (approx. 1 s in case of BP configuration and approx. 5 s in case of BR configuration). Teach-in operation starts, green LED (State) flashes slowly (approx. 1 Hz). During the teach-in operation, the locking module checks whether the handle module is a disabled handle module. Provided this is not the case, the teach-in operation is completed after approx. 30 seconds, and the green LED (State) goes out. The new code has now been stored, and the old code is disabled.

5. To activate the handle module's code from the teach-in operation in the locking module, the operating voltage must then be switched off at the locking module for min. 3 seconds. As an alternative, 24 V can be applied to the input RST for at least 3 seconds.

Teach-in in a series connection works analogously. Here, the complete series connection must be restarted using the input RST.

14.2. Mechanical function test

It must be possible to insert the bolt tongue easily into the locking module. To check, close guard several times and actuate door handle.

If available, check function of the escape release. With active guard locking it must be possible to operate the escape release from the inside without excessive effort (approx. 40 N).

14.3. Electrical function test

BR

WARNING

On usage in a switch chain with different BR devices (e.g. CES-BR), also follow the procedure for the functional check in the related operating instructions.

DIP

With active guard locking monitoring

1. Switch on operating voltage.

➡ The locking module carries out a self-test. In case of BR configuration: the green State LED flashes for 5 s at 5 Hz. The green State LED then flashes at regular intervals.

2. Close all guards and insert the bolt tongue into the locking module.
Guard locking by solenoid force: activate guard locking.

➡ The safety outputs FO1A/FO1B are ON

➡ The machine must not start automatically.

➡ It must not be possible to open the guard.

➡ The green State LED and the yellow Lock LED are illuminated continuously.

3. Enable operation in the control system.

➡ It must not be possible to deactivate guard locking as long as operation is enabled.

4. Disable operation in the control system and deactivate guard locking.

➡ The guard must remain locked until there is no longer any risk of injury.

➡ It must not be possible to start the machine as long as guard locking is deactivated.

➡ It must be possible to open the guard.

Repeat steps 2-4 for each guard.

With inactive guard locking monitoring

1. Switch on operating voltage.

➡ The locking module carries out a self-test. In case of BR configuration: the green State LED flashes for 5 s at 5 Hz. The green State LED then flashes at regular intervals.

2. Close all guards and insert the bolt tongue into the locking module. As soon as the bolt tongue is inserted into the locking module, the safety outputs FO1A/FO1B are ON. Independent of whether the guard locking is active or not.

➡ The machine must not start automatically.

➡ The green State LED illuminates continuously. The yellow Lock LED is ON for a long time with a short interruption or is ON continuously (depending on the state of the guard locking)

3. Enable operation in the control system.

4. If necessary deactivate guard locking and open guard.

➡ The machine must switch off and it must not be possible to start it as long as the guard is open.

Repeat steps 2-4 for each guard.

EN

15. System states

15.1. Key to symbols

○	LED not illuminated
☀	LED illuminated
☀ 10 Hz (8 s)	LED flashes for 8 seconds at 10 Hz
☀ 3 x	LED flashes three times
X	Any state

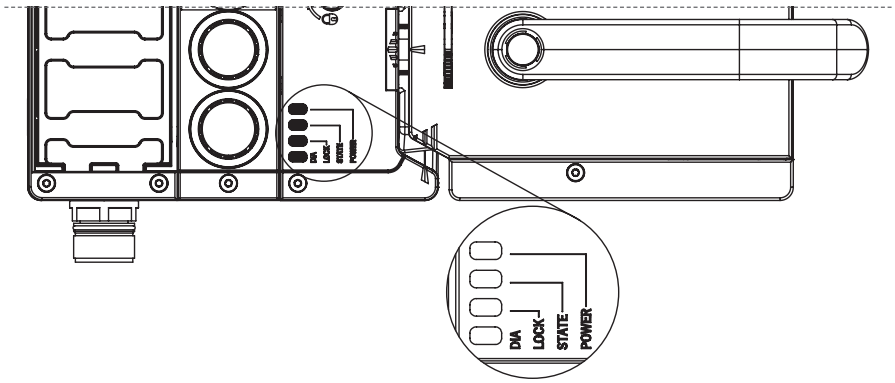

15.2. System status table MGB2-BR

Operating mode	Safety outputs FI1A and FI1B	Door position	Position of the bolt tongue	Guard locking	Safety outputs FO1A and FO1B	Door monitoring output (OD)	Bolt tongue monitoring output (OT)	Guard locking monitoring output (OL)	Diagnostics monitoring output (OI)	LED indicator: Power (green)	LED indicator: STATE (green)	LED indicator: DIA (red)	LED indicator: Lock (yellow)	Submodule LEDs: SLOT (red)	Submodule LEDs: SLOT (green)	State
Self-test	X	X	X	X	OFF	OFF	OFF	OFF	OFF	✳	✳ 5 Hz	○	○	○	○	Self-test after power-up
Normal operation	X	open	not inserted	OFF	OFF	OFF	OFF	OFF	OFF	✳	✳ Long OFF short ON		X	X	X	Normal operation, door open
	X	closed	not inserted	OFF	OFF	ON	OFF	OFF	OFF	✳	✳ Long ON, short OFF		X	X	X	Normal operation, door closed
	OFF	closed	inserted	OFF	OFF	ON	ON	OFF	OFF	✳	✳ Long ON, short OFF		✳ Long ON, short OFF	X	X	Normal operation, door closed, bolt tongue inserted, safety inputs FI1A/FI1B OFF
	ON	closed	inserted	OFF	OFF	ON	ON	OFF	OFF	✳	✳ Long ON, short OFF	○	✳ Long ON, short OFF	X	X	**With active guard locking monitoring:** normal operation, door closed, bolt tongue inserted. Safety inputs FI1A/FI1B are ON. Safety outputs FO1A and FO1B ⊞ are OFF
					ON						✳					**With inactive guard locking monitoring:** normal operation, door closed, bolt tongue inserted. Safety inputs FI1A/FI1B are ON. Safety outputs FO1A and FO1B are ON
	OFF	closed	inserted	ON	OFF	ON	ON	ON	OFF	✳	✳ Long ON, short OFF		✳	X	X	**Operation in a BR chain:** normal operation, door closed and locked. Safety outputs on the previous device OFF
	ON	closed	inserted	ON	ON	ON	ON	ON	OFF	✳	✳		✳	X	X	**Operation as separate device:** normal operation, door closed and locked.
																Operation in a BR chain: normal operation, door closed and locked. Safety outputs on the previous device ON
Teach-in standby (only for MGB2 unicode)	X	X	not inserted	OFF	OFF	X	OFF	OFF	OFF	✳	✳ 3 x	○	○	X	X	Door open; device is ready for teach-in of another handle module (only 3 min. after power-up). If a transponder is detected, jump to the teach-in operation state. Should the teach-in operation not be successful, this state is active again after a reset.
Setup (only for MGB2 unicode)	X	X	X	X	OFF	OFF	OFF	OFF	OFF	✳	✳ 5 Hz	1x	○	○	O	Waiting for address assignment by master.
	X	closed	inserted	X	OFF	X	X	X	OFF	✳	✳ 1 Hz	○		X	X	Teach-in operation, tip: to prevent the interruption of teach-in operations, close door and switch on guard locking. If teach-in operation is started, it is always continued to the end. After the teach-in time has elapsed, one of these states is assumed with latching: 1. User action acknowledgment 2. Teach-in fault 3. Transponder fault
	X	X	X	X	OFF	OFF	OFF	OFF	OFF		✳ 1 Hz	✳ 1 Hz	○	○	O	Positive acknowledgment after completion of teach-in operation

EN

Diagnostics	X	X	X	X	OFF	X	X	X	ON		1 x			○		○	○	Error during teach-in/configuration or invalid DIP switch setting
	erro-ne-ous	X	X	X	OFF	X	X	X	ON		2 x			○		X	X	FI1A/FI1B (latching) input error (e.g. missing test pulses, illogical switching state from previous switch)
	X	X	X	X	OFF	X	X	X	ON		2x		Long ON	○		X	X	(Resettable) input error
	X	X	X	X	OFF	X	OFF	OFF	ON		3 x			○		X	X	Faulty or disable transponder. If a transponder error is detected during the teaching-in, the teach-in operation is continued and the transponder error indicated at the end
	X	X	X	X	OFF	X	OFF	OFF	ON		3 x		Long ON	○		X	X	Faulty or disabled transponder has been detected during normal operation
	X	X	X	X	OFF	X	X	X	ON		4 x			○		X	X	Output fault (latching, e.g. short circuit, loss of switching capability) or short circuit at the outputs. Cross circuit, external voltage, short circuit on the output or output current too high
	X	X	X	X	OFF	X	X	X	ON		4 x		Long ON	○		X	X	Output fault (resettable, e.g. short circuit, loss of switching capability) or short circuit at the outputs. Cross circuit, external voltage, short circuit on the output or output current too high
	X	X	X	X	OFF	X	X	X	ON		○			○		○	○	Internal fault (e.g. component faulty, data error)
	X	X	X	X	OFF	X	X	X	ON		○		Long ON		1 x	X	X	Signal sequence erroneous (e.g. broken bolt tongue) With active release monitoring: escape release or auxiliary release was actuated.
	X	X	X	X	OFF	X	X	X	ON		5 x		ON	○		X	X	Environment fault (latching), e.g. voltage or temperature too high/too low.
	X	X	X	X	OFF	X	X	X	ON		5 x		Long ON	○		X	X	Environment fault (resettable), e.g. voltage or temperature too high/too low.
	X	X	X	X	X	X	X	X	ON		○				2x	X	X	Voltage error on the solenoid:
	X	X	X	X	X	X	X	X	X		X		X	X			○	Internal fault in the submodule, e.g. CRC error

After remedying the cause, use the reset function (see chapter *17. Troubleshooting and assistance on page 51*) or briefly disconnect the power supply. Please contact the manufacturer if the fault could not be reset after restarting.
Important: If you do not find the displayed device status in the system status table, this indicates an internal device fault. In this case, you should contact the manufacturer.

15.3. System status table MGB2-BP

Operating mode	Door position	Position of the bolt tongue	Guard locking	Safety outputs FO1A and FO1B	Door monitoring output (OD)	Bolt tongue monitoring output (OT)	Guard locking monitoring output (OL)	Diagnostics monitoring output (OI)	Power (green)	STATE (green)	DIA (red)	Lock (yellow)	Submodule LEDs: SLOT (red)	Submodule LEDs: SLOT (green)	State
Self-test	X	X	X	OFF	OFF	OFF	OFF	OFF	☀	☀ 5 Hz	O	O	O	O	Self-test after power-up
Normal operation	open	not inserted	OFF	OFF	OFF	OFF	OFF	OFF	☀	☀ Long OFF short ON	O	X	X	X	Normal operation, door open
	closed	not inserted	OFF	OFF	ON	OFF	OFF	OFF	☀	☀ Long ON, short OFF	O	X	X	X	Normal operation, door closed
	closed	inserted	OFF	OFF	ON	ON	OFF	OFF	☀	☀ Long ON, short OFF	O	☀ Long ON, short OFF	X	X	**With active guard locking monitoring:** normal operation, door closed, bolt tongue inserted. Safety outputs FO1A and FO1B ⏚ are OFF
				ON						☀					**With inactive guard locking monitoring:** normal operation, door closed, bolt tongue inserted. Safety outputs FO1A and FO1B are ON
	closed	inserted	ON	ON	ON	ON	ON	OFF	☀	☀		☀	X	X	Normal operation, door closed and locked.
Teach-in standby (only for MGB2 unicode)	X	not inserted	OFF	OFF	X	OFF	OFF	OFF	☀	☀ 3 x	O		X	X	Door open; device is ready for teach-in of another handle module (only 3 min. after power-up). If a transponder is detected, jump to the teach-in operation state. Should the teach-in operation not be successful, this state is active again after a reset.
Setup (only for MGB2 unicode)	X	X	X	OFF	OFF	OFF	OFF	OFF	☀	☀ 5 Hz	1x	O	O	O	Waiting for address assignment by master.
	closed	inserted	X	OFF	X	X	X	OFF	☀	☀ 1 Hz	☀ O	O	X	X	Teach-in operation, tip: to prevent the interruption of teach-in operations, close door and switch on guard locking. If teach-in operation is started, it is always continued to the end. After the teach-in time has elapsed, one of these states is assumed with latching: 1. User action acknowledgment 2. Teach-in fault 3. Transponder fault
	X	X	X	OFF	OFF	OFF	OFF	OFF	☀	☀ 1 Hz	☀ 1 Hz	O	O	O	Positive acknowledgment after completion of teach-in operation

EN

Diagnostics	X	X	X	OFF	X	X	X	ON		1 x		○		○		○	Error during teach-in/configuration or invalid DIP switch setting
	X	X	X	OFF	X	OFF	OFF	ON		3 x		○		X		X	Faulty or disable transponder. If a transponder error is detected during the teaching-in, the teach-in operation is continued and the transponder error indicated at the end
	X	X	X	OFF	X	OFF	OFF	ON		3 x	Long ON	○		X		X	Faulty or disabled transponder has been detected during normal operation
	X	X	X	OFF	X	X	X	ON		4 x		○		X		X	Output fault (latching, e.g. short circuit, loss of switching capability) or short circuit at the outputs. Cross circuit, external voltage, short circuit on the output or output current too high
	X	X	X	OFF	X	X	X	ON		4 x	Long ON	○		X		X	Output fault (resettable, e.g. short circuit, loss of switching capability) or short circuit at the outputs. Cross circuit, external voltage, short circuit on the output or output current too high
	X	X	X	OFF	X	X	X	ON		○		○		○		○	Internal fault (e.g. component faulty, data error)
	X	X	X	OFF	X	X	X	ON		○	Long ON		1 x	X		X	Signal sequence erroneous (e.g. broken bolt tongue) With active release monitoring: escape release or auxiliary release was actuated.
	X	X	X	OFF	X	X	X	ON		5 x	ON	○		X		X	Environment fault (latching), e.g. voltage or temperature too high/too low.
	X	X	X	OFF	X	X	X	ON		5 x	Long ON	○		X		X	Environment fault (resettable), e.g. voltage or temperature too high/too low.
	X	X	X	X	X	X	X	ON		○			2x	X		X	Voltage error on the solenoid:
	X	X	X	X	X	X	X	X		X	X	X				○	Internal fault in the submodule, e.g. CRC error

After remedying the cause, use the reset function (see chapter *17. Troubleshooting and assistance on page 51*) or briefly disconnect the power supply. Please contact the manufacturer if the fault could not be reset after restarting.
Important: If you do not find the displayed device status in the system status table, this indicates an internal device fault. In this case, you should contact the manufacturer.

15.4. System status table (slot LED)

A submodule error is reset automatically as soon as a compatible submodule is installed correctly.

Fault display LED SLOT1	Meaning	Measures
OFF	A submodule is not used.	–
Green ON	Compatible submodule used and the submodule is functioning without errors or the submodule has been installed rotated by 180°.	–
Red ON	An incompatible submodule has been installed.	Install compatible submodule to reset.

EN

16. Technical data

NOTICE

If a product data sheet is included with the product, the information on the data sheet applies in case of discrepancies with the operating instructions.

Parameter	Value			Unit
	min.	typ.	max.	
Housing material	Fiber glass reinforced plastic die-cast zinc, nickel-plated stainless steel			
Dimensions	See chapter *7.4. Dimension drawing on page 15* *(Interlocking module/Locking module, without Sub modules)*			
Weight Locking module Handle module Escape release	 1.00 1.10 0.55			kg
Ambient temperature at UB = DC 24 V	-15 … +55			°C
Degree of protection Cover not populated/populated with buttons/ indicators/selector switches/key-operated switches	IP 65			
Safety class	III			
Degree of contamination	3			
Installation position	Any			
Locking force F_{zh} acc. to EN ISO 14119	2000			N
Connection	1 cable entry M20x1.5 with 4 socket connectors or plug connectors			
Conductor cross-section (rigid/flexible) - With ferrule according to DIN 46228/1 - With ferrule with collar according to DIN 46228/1	0.25 … 1.5 (AWG 23 … AWG 16) 0.25 … 1.5 0.25 … 0.75			mm^2
Operating voltage UB (reverse polarity protected, regulated, residual ripple < 5 %)	24 ±15% (PELV)			V DC
Current consumption I_{UB} (at 20.4 V incl. FI1A/FI1B, no load on any outputs)	80			mA
Operating voltage guard locking solenoid IMP (reverse polarity protected, regulated, residual ripple < 5 %)	24 ±15% (PELV)			V DC
Test pulses operating voltage guard locking solenoid IMP	5			ms
Test-pulse interval operating voltage guard locking solenoid IMP	100			ms
Current consumption I_{IMP} - With energized guard locking solenoid and unloaded outputs OI, OL, OT/C and OD	 375			mA
External fuse	See chapter *13.4. Fuse protection for power supply on page 30*			
Safety outputs FO1A/FO1B	**Semiconductor outputs, p-switching, short circuit-proof**			
Test pulses	< 300			µs
Test-pulse interval	Min. 100			ms
Output voltage U_{FO1A} / U_{FO1B} [1)] HIGH U_{FO1A} / U_{FO1B} LOW U_{FO1A} / U_{FO1B}	 UB-2V … UB 0 … 1			 V DC
Switching current per safety output	1 … 150			mA
Switching current per control input IMP and IMM	20 … 25			mA
Utilization category according to EN IEC 60947-5-2	DC-13 24 V 150 mA Caution: Outputs must be protected with a free-wheeling diode in case of inductive loads.			
Monitoring outputs - Output voltage [1)] - Max. load	p-switching, short circuit-proof UB - 2V … UB Max. 50			 mA
Rated insulation voltage U_i	75			V
Rated impulse withstand voltage U_{imp}	1.5			kV
Resilience to vibration	Acc. to EN IEC 60947-5-3			
Switching frequency	0.25			Hz
EMC protection requirements	Acc. to EN IEC 60947-5-3			
Ready delay (BR)	-	5	-	s
Risk time for single device	-	-	50	ms
Risk time delay per device	10			ms
Switch-on time	-	-	80	ms
Discrepancy time	-	-	10	ms
Test-pulse duration	0.3			ms
Test-pulse interval	approx. 100			ms

Reliability values acc. to EN ISO 13849-1	Guard locking monitoring	Control of guard locking	
Category	4	4	
Performance Level	PL e	PL e	
Diagnostic Coverage DC	99	–	%
PFH_D	3.9×10^{-9} / h	3.9×10^{-9} / h	
Mission time	20	20	years
Safety Integrity Level	SIL 3	SIL 3	
Mechanical life	1×10^6		
- In case of use as door stop, and 1 Joule impact energy	0.1×10^6		
B_{10D} (emergency stop)	0.065×10^6		
Emergency stop			
Operating voltage	5 … 24		V
Operating current	1 … 100		mA
Breaking capacity max.	250		mW
Power supply LED	24		V DC
Controls and indicators			
Operating voltage	UA		V
Operating current	1 … 10		mA
Breaking capacity max.	250		mW
Power supply LED	24		V DC

1) Values at a switching current of 50 mA without taking into account the cable length.

16.1. Radio frequency approvals

Product description: Safety Switch

FCC ID: 2AJ58-03

IC: 22052-03

FCC/IC requirements

This device complies with part 15 of the FCC Rules and with Industry Canada's licence-exempt RSSs. Operation is subject to the following two conditions:

1) This device may not cause harmful interference, and

2) this device must accept any interference received, including interference that may cause undesired operation.

Changes or modifications not expressly approved by the party responsible for compliance could void the user's authority to operate the equipment.

NOTE: This equipment has been tested and found to comply with the limits for a Class A digital device, pursuant to part 15 of the FCC Rules. These limits are designed to provide reasonable protection against harmful interference when the equipment is operated in a commercial environment. This equipment generates, uses, and can radiate radio frequency energy and, if not installed and used in accordance with the instruction manual, may cause harmful interference to radio communications. Operation of this equipment in a residential area is likely to cause harmful interference in which case the user will be required to correct the interference at his own expense.

Le présent appareil est conforme aux CNR d'Industrie Canada applicables aux appareils radio exempts de licence. L'exploitation est autorisée aux deux conditions suivantes :

(1) l'appareil ne doit pas produire de brouillage, et

(2) l'utilisateur de l'appareil doit accepter tout brouillage radioélectrique subi, même si le brouillage est susceptible d'en compromettre le fonctionnement.

EN

16.2. Typical system times

Important!

The system times given are maximum values for one device.

Ready delay:

BR ***In case of BR configuration the following applies:*** After switching on, the unit carries out a self-test for 5 s. The system is ready for operation only after this time.

BP ***In case of BP configuration the following applies:*** After switching on, the unit carries out a self-test for 0.5 s. The system is ready for operation only after this time.

Switch-on time of safety outputs:

BR ***In case of BR configuration the following applies:*** The max. reaction time from the moment when the guard is locked to the moment when the safety outputs switch on T_{on} is 80 ms.

BP ***In case of BP configuration the following applies:*** The max. reaction time from the moment when the bolt tongue is inserted to the moment when the safety outputs switch on T_{on} is 80 ms.

BR **Simultaneity monitoring, safety inputs FI1A/FI1B:** If the safety inputs have different switching states for longer than 50 ms, the safety outputs FO1A/FO1B will be switched off. The devices switches to fault state.

Risk time according to EN 60947-5-3:

DIP ***With active guard locking monitoring the following applies:*** If the guard locking is no longer effective, the safety outputs FO1A and FO1B are deactivated after a maximum of 100 ms.

This value applies to a single switch. For each additional switch in a chain the risk time increases by 10 ms.

DIP ***With inactive guard locking monitoring the following applies:*** If the bolt tongue is pulled out of the locking module, the safety outputs FO1A and FO1B are deactivated after a maximum of 100 ms.

This value applies to a single switch. For each additional switch in a chain the risk time increases by 10 ms.

Difference time: The safety outputs FO1A and FO1B switch with a slight delay in relation to each other. They both have the ON state at the latest after a difference time of 10 ms.

17. Troubleshooting and assistance

Simple errors (DIA is flashing) are reset by opening and closing the guard. If the error is not reset by this action, proceed as follows:

17.1. Resetting errors

Proceed as follows:

1. Open the guard.
2. Switch off operating voltage at the locking module for min. 3 seconds or connect 24 V to the input RST for min. 3 seconds.
   Alternatively, the internal reset (see *7. System overview on page 13*) can be pressed for 3 seconds with a pointed object, e.g. ball-point pen.

➡ The green LED (State) flashes quickly (approx. 5 Hz in case of BR configuration). A self-test is performed during this time (approx. 5 s in case of BR configuration). The LED then cyclically flashes three times.

3. Close guard and switch on guard locking.

➡ The system is in normal operation again.

17.2. Help on troubleshooting in the Internet

You will find a help file on troubleshooting under “Support” in the service area at www.euchner.com.

17.3. Help on mounting in the Internet

You will find an animation on the mounting process at www.euchner.com.

17.4. Application examples

You will find application examples on connecting the device to various control systems at www.euchner.com.

18. Service

If service support is required, please contact:

EUCHNER GmbH + Co. KG
Kohlhammerstraße 16
70771 Leinfelden-Echterdingen

Service telephone:

+49 711 7597-500

E-mail:

info@euchner.de

Internet:

www.euchner.com

EN

19. Inspection and service

WARNING

Loss of the safety function because of damage to the device.

- In case of damage, the affected module must be replaced completely. Only accessories or spare parts that can be ordered from EUCHNER may be replaced.
- Check the device for proper function at regular intervals and after every fault. For information about possible time intervals, refer to EN ISO 14119:2013, section 8.2.

Regular inspection of the following is necessary to ensure trouble-free long-term operation:

- Check the switching function (see chapter *14.3. Electrical function test on page 40*)
- Check the secure mounting of the devices and the connections
- Check for soiling

No servicing is required. Repairs to the device are only allowed to be made by the manufacturer.

NOTICE

The year of manufacture can be seen in the lower right corner of the rating plate.

20. Declaration of conformity

CE

EUCHNER
More than safety.

EU-Konformitätserklärung
EU declaration of conformity
Déclaration UE de conformité
Dichiarazione di conformità UE
Declaración UE de conformidad

Original DE
Translation EN
Traduction FR
Traduzione IT
Traducción ES

2500504-01-02/19

Die nachfolgend aufgeführten Produkte sind konform mit den Anforderungen der folgenden Richtlinien (falls zutreffend):
The beneath listed products are in conformity with the requirements of the following directives (if applicable):
Les produits mentionnés ci-dessous sont conformes aux exigences imposées par les directives suivantes (si valable)
I prodotti sotto elencati sono conformi alle direttive sotto riportate (dove applicabili):
Los productos listados a continuación son conforme a los requisitos de las siguientes directivas (si fueran aplicables):

I:	Maschinenrichtlinie	2006/42/EG
	Machinery directive	*2006/42/EC*
	Directive Machines	*2006/42/CE*
	Direttiva Macchine	*2006/42/CE*
	Directiva de máquinas	*2006/42/CE*
II:	Funkanlagen-Richtlinie (RED)	2014/53/EU
	Radio equipment directive	*2014/53/EU*
	Directive équipement radioélectrique	*2014/53/UE*
	Direttiva apparecchiatura radio	*2014/53/UE*
	Directiva equipo radioeléctrico	*2014/53/UE*
III:	RoHS Richtlinie	2011/65/EU
	RoHS directive	*2011/65/EU*
	Directive de RoHS	*2011/65/UE*
	Direttiva RoHS	*2011/65/UE*
	Directiva RoHS	*2011/65/UE*

Die Schutzziele der Niederspannungsrichtlinie 2014/35/EU und EMV Richtlinie 2014/30/EU werden gemäß Artikel 3.1 der Funkanlagen-Richtlinie eingehalten.
The safety objectives of the Low-voltage directive 2014/35/EU and EMC Directive 2014/30/EU comply with article 3.1 of the Radio equipment directive.
Les objectifs de sécurité de la Directive basse tension 2014/35/UE et Directive de CEM 2014/30/EU sont conformes à l'article 3.1 de la Directive équipement radioélectrique.
Gli obiettivi di sicurezza della Direttiva bassa tensione 2014/35/UE e Direttiva CEM 2014/30/UE sono conformi a quanto riportato nell´articolo 3.1 della Direttiva apparecchiatura radio.
Los objetivos de seguridad de la Directiva de bajo voltaje 2014/35/UE y Directiva CEM 2014/30/UE cumplen con el artículo 3.1 de la Directiva equipo radioeléctrico.

Folgende Normen sind angewandt:	a:	EN 60947-5-3:2013
Following standards are used:	b:	EN ISO 14119:2013
Les normes suivantes sont appliquées:	c:	EN ISO 13849-1:2015
Vengono applicate le seguenti norme:	d:	EN 62061:2005/A2:2015
Se utilizan los siguientes estándares:	e:	EN 60947-5-5:1997/A11:2013
	f:	EN 50364:2010
	g:	EN 300 330 V2.1.1
	h:	EN 50581:2012 (RoHS)

Bezeichnung der Bauteile *Description of components* *Description des composants* *Descrizione dei componenti* *Descripción de componentes*	Type *Type* *Type* *Tipo* *Typo*	Richtlinie *Directives* *Directive* *Direttiva* *Directivas*	Normen *Standards* *Normes* *Norme* *Estándares*	Zertifikats-Nr. *No. of certificate* *Numéro du certificat* *Numero del certificato* *Número del certificado*
Sicherheitsschalter *Safety Switches* *Interrupteurs de sécurité* *Finecorsa di sicurezza* *Interruptores de seguridad*	MGB2-I.-B… MGB2-L.-B… MGB2-H... MSM..	I, II, III	a, b, c, d, f, g, h	
Sicherheitsschalter mit Not-Halt-Einrichtungen *Safety Switches with Emergency-Stop facilities* *Interrupteurs de sécurité avec appareillage arrêt d'urgence* *Finecorsa di sicurezza con dispositivi di arresto di emergenza* *Interruptores de seguridad con dispositivos de parada de emergencia*	MGB2-I.-B… MGB2-L.-B… MGB2-H... MSM...	I, II, III	a, b, c, d, e, f, g, h	

Benannte Stelle
Notified Body
Organisme notifié
Sede indicata
Entidad citada

NB 0123
TÜV SÜD Product Service GmbH
Ridlerstrasse 65
80339 München
Germany

14.102.2019 - NG -VS - Blatt/*Sheet/ Page/Pagina/ Página* 1
EUCHNER GmbH + Co. KG Kohlhammerstraße 16 70771 Leinfelden-Echterdingen Tel. +49/711/7597-0 Fax +49/711/753316 www.euchner.de info@euchner.de

DRAFT

EN

CE

EUCHNER
More than safety.

Die alleinige Verantwortung für die Ausstellung dieser Konformitätserklärung trägt der Hersteller:
This declaration of conformity is issued under the sole responsibility of the manufacturer:
La présente déclaration de conformité est établie sous la seule responsabilité du fabricant:
La presente dichiarazione di conformità è rilasciata sotto la responsabilità esclusiva del fabbricante:
La presente declaración de conformidad se expide bajo la exclusiva responsabilidad del fabricante:

EUCHNER GmbH + Co. KG
Kohlhammerstraße 16
70771 Leinfelden-Echterdingen
Germany

Leinfelden, Februar 2019

EUCHNER GmbH + Co. KG
Kohlhammerstraße 16
70771 Leinfelden-Echterdingen
Germany

i.A. Dipl.-Ing. Richard Holz
Leiter Elektronik-Entwicklung
Manager Electronic Development
Responsable Développement Électronique
Direttore Sviluppo Elettronica
Director de desarrollo electrónico

i.A. Dipl.-Ing. (FH) Duc Binh Nguyen
Dokumentationsbevollmächtigter
Documentation manager
Responsable documentation
Responsabilità della documentazione
Agente documenta

DRAFT

14.102.2019 - NG -VS - Blatt/*Sheet/ Page/Pagina/ Página* 2
EUCHNER GmbH + Co. KG Kohlhammerstraße 16 70771 Leinfelden-Echterdingen Tel. +49/711/7597-0 Fax +49/711/753316 www.euchner.de info@euchner.de

EN

Euchner GmbH + Co. KG
Kohlhammerstraße 16
70771 Leinfelden-Echterdingen
info@euchner.de
www.euchner.com

Edition:
2500233-01-05/19
Title:
Operating Instructions Safety Systems
MGB2-L1…-BR.-… / MGB2-L2…-BR.-… and
MGB2-L1…-BP.-… / MGB2-L2…-BP.-… from V1.0.0
(Translation of the original operating instructions)
Copyright:
© EUCHNER GmbH + Co. KG, 05/2019

Subject to technical modifications; no responsibility is accepted for the accuracy of this information.