EUCHNER

Operating Instructions

Safety System

MGBS-P-L.-AR… Unicode/Multicode

EN

Contents

1. About this document ... 4
1.1. Scope ... 4
1.2. Target group ... 4
1.3. Key to symbols ... 4
1.4. Supplementary documents ... 4
2. Correct use ... 5
3. Description of the safety function ... 6
4. Exclusion of liability and warranty ... 8
5. General safety precautions ... 8
6. Function ... 9
6.1. Guard locking monitoring ... 9
6.2. Door monitoring output (OD) ... 9
6.3. Diagnostic output (OI) ... 9
6.4. Guard locking monitoring output (OL) ... 9
6.5. Version MGBS Extended ... 9
6.6. Guard locking for version MGBS-L1 ... 9
6.7. Guard locking for version MGBS-L2 ... 10
6.8. Switching states ... 10
7. System overview ... 11
7.1. MGBS-P-… (optionally with escape release) ... 11
7.2. MGBS-H-… ... 11
7.3. AE-R-S1-...(for versions with escape release) ... 11
7.4. Dimension drawing (example illustration) ... 12
7.5. Drilling pattern (example illustration) ... 13
8. Manual release ... 14
8.1. Auxiliary release and auxiliary key release ... 14
8.1.1. Actuating auxiliary release ... 14
8.1.2. Actuating auxiliary key release ... 14
8.2. Emergency release ... 15
8.2.1. Actuating emergency release ... 15
8.3. Escape release (optional) ... 16
8.3.1. AE-R-S1 (for versions with escape release) ... 16
8.3.2. Preparing AE-R-S1 ... 17
8.4. Lockout mechanism ... 18
8.5. Wire front release (bowden) ... 19
8.5.1. Laying wire front release ... 19
9. Changing actuating direction of the locking module ... 20

10. Mounting ... 21
10.1. Mounting examples ... 21
10.2. Actuating escape release ... 22
11. Electrical connection ... 23
11.1. Notes about c UL us ... 24
11.2. Safety in case of faults ... 24
11.3. Fuse protection for power supply ... 24
11.4. Requirements for connecting cables ... 25
11.5. Maximum cable lengths ... 26
11.5.1. Determining cable lengths using the example table ... 27
11.6. Connector assignment locking module MGBS-…-AR-…-SAB-… with plug connector 2 x M12 ... 28
11.7. Connector assignment locking module MGBS-…-AR-…-SH-… with plug connector M23 (RC18) ... 28
11.8. Connector assignment of Y-distributor ... 29
11.9. Connection of a single MGBS-AR ... 30
11.10. Connection of several MGBS-AR in a switch chain ... 30
11.11. Notes about operation on an AR evaluation unit ... 32
11.12. Notes about operation with safe control systems ... 32
11.13. Connection of guard locking control ... 33
11.13.1. Guard locking control for variants with IMM connection ... 33
11.13.2. Guard locking control for variants without IMM connection ... 33
12. Setup ... 34
12.1. LED displays ... 34
12.2. Teach-in function for handle module (only for unicode evaluation) ... 34
12.2.1. Teaching in handle module ... 35
12.2.2. Teach-in function with series connection, replacing and teaching in device ... 35
12.3. Functional check ... 36
12.3.1. Mechanical function test ... 36
12.3.2. Electrical function test ... 36
13. System status table ... 37
14. Technical data ... 38
14.1. Technical data for locking module MGBS-AR ... 38
14.1.1. Typical system times ... 39
14.2. Radio frequency approvals ... 40
14.3. Dimension drawings, variants ... 41
15. Ordering information and accessories ... 43
16. Inspection and service ... 43
17. Service ... 43
18. Declaration of conformity ... 44

EN

1. About this document

1.1. Scope

These operating instructions are valid for all MGBS-P-L.-AR… from version V1.0.0. These operating instructions, the document “Safety information and maintenance” and any enclosed data sheet form the complete user information for your device.

1.2. Target group

Design engineers and installation planners for safety devices on machines, as well as setup and servicing staff possessing special expertise in handling safety components.

1.3. Key to symbols

Symbol/depiction	Meaning
	Printed document
www	Document is available for download at www.euchner.com
	Document on CD
MEM	This section is applicable only if the memory card is used
DANGER **WARNING** **CAUTION**	Safety precautions **Danger** of death or severe injuries **Warning** about possible injuries **Caution** slight injuries possible
NOTICE **Important!**	**Notice** about possible device damage **Important** information
Tip	Useful information

1.4. Supplementary documents

The overall documentation for this device consists of the following documents:

Document title (document number)	Contents	
Safety Information and Maintenance MGBS (2519732)	Basic information for safe setup and service	
Operating Instructions (2527246)	(this document)	
Possibly enclosed data sheet	Item-specific information about deviations or additions	

Important!

Always read all documents to gain a complete overview of safe installation, setup and use of the device. The documents can be downloaded from www.euchner.com. For this purpose enter the doc. no. in the search box.

2. Correct use

The safety system MGBS consists of a locking module MGBS-P-L.-AR… and a handle module MGBS-H… and is an interlocking device with guard locking solenoid (type 4). Devices with unicode evaluation possess a high coding level, devices with multicode evaluation possess a low coding level.

In combination with a movable guard and the machine control, this safety component prevents the guard from being opened while a dangerous machine function is being performed.

This means:

- Starting commands that cause a dangerous machine function must become active only when the guard is closed and locked.
- The guard locking must not be unlocked until the dangerous machine function has ended.
- Closing and locking a guard must not cause automatic starting of a dangerous machine function. A separate start command must be issued. For exceptions, refer to EN ISO 12100 or relevant C-standards.

Devices from this series are also suitable for process protection.

Before the device is used, a risk assessment must be performed on the machine, e.g. in accordance with the following standards:

- EN ISO 13849-1, Safety of machinery – Safety-related parts of control systems – Part 1: General principles for design
- EN ISO 12100, Safety of machinery – General principles for design – Risk assessment and risk reduction
- IEC 62061, Safety of machinery – Functional safety of safety-related electrical, electronic and programmable electronic control systems

Correct use includes observing the relevant requirements for installation and operation, particularly based on the following standards:

- EN ISO 13849-1, Safety of machinery – Safety-related parts of control systems – Part 1: General principles for design
- EN ISO 14119, Safety of machinery – Interlocking devices associated with guards – Principles for design and selection
- EN 60204-1, Safety of machinery – Electrical equipment of machines – Part 1: General requirements

The safety system MGBS is only allowed to be operated in conjunction with the intended EUCHNER handle modules and the related connection components and accessories from EUCHNER.

On the modification of system components, EUCHNER provides no warranty for function.

AR

Locking modules with the configuration MGBS-P-….-AR can be integrated into an AR switch chain. Connection of several devices in an AR switch chain is permitted only using devices intended for series connection in an AR switch chain. Check the operating instructions for the related device. A maximum of 20 safety switches are allowed to be operated in a switch chain.

Important!

- The user is responsible for the proper integration of the device into a safe overall system. For this purpose, the overall system must be validated, e.g. in accordance with EN ISO 13849-2.
- Correct use requires observing the permissible operating parameters (see chapter *14. Technical data on page 38*).
- If a data sheet is included with the product, the information on the data sheet applies.
- It is only allowed to use components that are permissible in accordance with the table below.

EN

Table 1: Possible combinations for MGBS components

Locking module	Handle module
	MGBS-H…
MGBS…AR	●

Key to symbols	●	Combination possible

NOTICE

For information about combination with an AR evaluation unit, please refer to chapter *11.10. Connection of several MGBS-AR in a switch chain on page 30*.

3. Description of the safety function

Devices from this series feature the following safety functions:

Monitoring of guard locking and the position of the guard (interlocking device with guard locking according to EN ISO 14119)

- Safety function (see chapter *6.8. Switching states on page 10*):
  - The safety outputs are switched off when guard locking is released (monitoring of the locking element).
  - The safety outputs are switched off when the guard is open (monitoring of the door position).
  - The guard locking can be activated only if the handle module is located in the switch head (faulty closure protection).
  - The following additionally applies in an AR series connection: the safety outputs are switched on only when the device receives a corresponding signal from its predecessor in the chain.
- Safety characteristics: category, Performance Level, PFH_D (see chapter *14. Technical data on page 38*).

NOTICE

You can regard the complete AR device chain as one subsystem during calculation. The following calculation method applies to the PFH_D value:

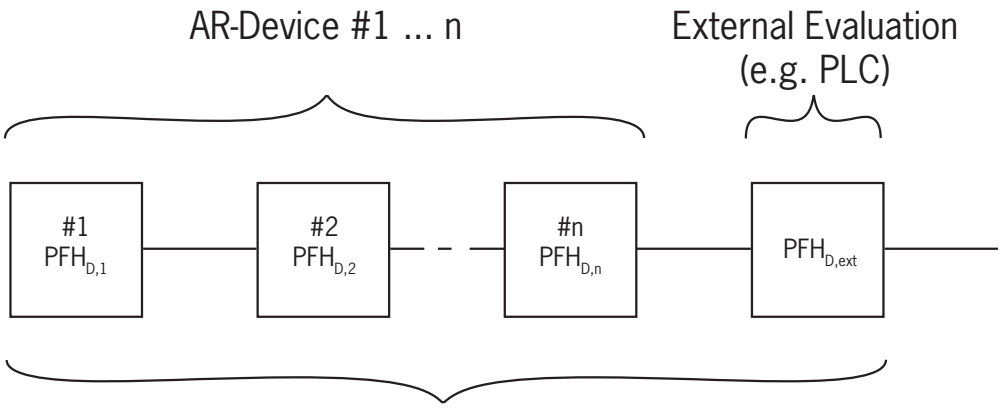

$$PFH_D \text{ ges} = \sum_{k=1}^{n} PFH_{D,k} + PFH_{D,ext}$$

Alternatively, the simplified method according to section 6.3 of EN 13849-1:2015 can be used for calculation.

Control of guard locking

If the device is used as guard locking for personnel protection, the control of the guard locking must be regarded as a safety function.

The device does not feature a safety characteristic for the control of the guard locking, because the guard locking solenoid is completely disconnected from outside the device (no control function within the device). It therefore does not contribute to the failure probability.

The safety level for the control of the guard locking is defined only by the external control (e.g. $PFH_{D,\ ext.}$ for the standstill monitor).

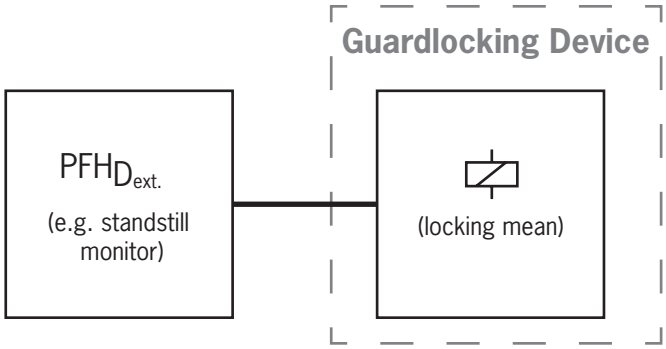

The following applies to devices with emergency stop:

Emergency stop (emergency stop device according to EN ISO 13850)

- Safety function: emergency stop function
- Safety characteristics: B10D value (see data sheet enclosed)

EN

4. Exclusion of liability and warranty

In case of failure to comply with the conditions for correct use stated above, or if the safety regulations are not followed, or if any servicing is not performed as required, liability will be excluded and the warranty void.

5. General safety precautions

Locking modules fulfill personnel protection functions. Incorrect installation or tampering can lead to fatal injuries to personnel.

Check the safe function of the guard particularly

- after any setup work
- after the replacement of a system component
- after an extended period without use
- after every fault

Independent of these checks, the safe function of the guard should be checked at suitable intervals as part of the maintenance schedule.

WARNING

Danger to life due to improper installation or due to bypassing (tampering). Safety components perform a personnel protection function.

- Safety components must not be bypassed, turned away, removed or otherwise rendered ineffective. On this topic pay attention in particular to the measures for reducing the possibility of bypassing according to EN ISO 14119:2013, section 7.
- The switching operation may be triggered only by handle modules designated for this purpose.
- Prevent bypassing by means of replacement handle modules (only for multicode evaluation). For this purpose, restrict access to handle modules and to keys for releases, for example.
- Mounting, electrical connection and setup only by authorized personnel possessing the following knowledge:
  - specialist knowledge in handling safety components
  - knowledge about the applicable EMC regulations
  - knowledge about the applicable regulations on operational safety and accident prevention.

Important!

Prior to use, read the operating instructions and keep these in a safe place. Ensure the operating instructions are always available during mounting, setup and servicing. EUCHNER cannot provide any warranty in relation to the readability of the CD for the storage period required. For this reason you should archive a printed copy of the operating instructions. You can download the operating instructions from www.euchner.com.

6. Function

The device permits the locking of movable guards.

The system consists of the following components as a minimum: coded handle module (transponder) and locking module.

Whether the locking module learns the complete transponder code (unicode) or not (multicode) depends on the respective version.

- **Devices with unicode evaluation**: The handle module must be assigned to the locking module by a teach-in operation so that it is detected by the system. This unambiguous assignment ensures a particularly high level of protection against tampering. The system thus possesses a high coding level.
- **Devices with multicode evaluation**: Unlike systems with unique code detection, on multicode devices a specific code is not requested but instead it is only checked whether the handle module is of a type that can be detected by the system (multicode detection). There is no exact comparison of the transponder code with the taught-in code in the locking module. The system possesses a low coding level.

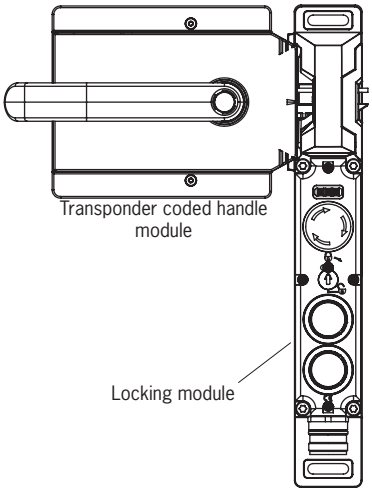

The tongue on the handle module is inserted in the locking module as the guard is closed. When the switch-on distance is reached, power is supplied to the handle module by the locking module and data are transferred.

If a permissible code is detected, the safety outputs are switched on.

The safety outputs and the monitoring output (OL) are switched off when the guard is unlocked.

In the event of a fault in the locking module, the safety outputs are switched off and the DIA LED illuminates red. The occurrence of faults is detected at the latest on the next demand to close the safety outputs (e.g. on starting).

6.1. Guard locking monitoring

All versions feature two safe outputs for monitoring guard locking. The safety outputs (FO1A and FO1B) are switched off when guard locking is released.

6.2. Door monitoring output (OD)

The door monitoring output is switched on as soon as the handle module is inserted in the switch head (state: guard closed and not locked). The door monitoring output also remains switched on when guard locking is active.

6.3. Diagnostic output (OI)

The diagnostic output is switched on in the event of a fault (switch-on condition as for DIA LED).

6.4. Guard locking monitoring output (OL)

The guard locking monitoring output is switched on when guard locking is active.

6.5. Version MGBS Extended

Some versions contain additional controls/indicators in the housing cover. Please refer to the enclosed data sheet for further information.

6.6. Guard locking for version MGBS-L1

(Guard locking actuated by spring force and released by power-ON)

Activating guard locking: close guard; no voltage at the solenoid.

Releasing guard locking: apply voltage to the solenoid.

The spring-operated guard locking functions in accordance with the closed-circuit current principle. If the voltage is interrupted at the solenoid, the guard locking remains active and the guard cannot be opened directly.

EN

Important!

If the guard is open when the power supply is interrupted and is then closed, guard locking is activated. This can lead to persons being locked in unintentionally.

The tongue on the handle module cannot be pulled out of the locking module and the guard is locked as long as the guard locking pin is extended.

If a voltage is applied to the guard locking solenoid, the guard locking pin is retracted and the tongue on the handle module is released. The guard can be opened.

6.7. Guard locking for version MGBS-L2

(Guard locking actuated by power-ON and released by spring force)

Important!

Use as guard locking for personnel protection is possible only in special cases, after strict assessment of the accident risk (see EN ISO 14119:2013, section 5.7.1)!

Activating guard locking: apply voltage to the solenoid.

Releasing guard locking: disconnect voltage from the solenoid.

The magnetically actuated guard locking operates in accordance with the open-circuit current principle. If the voltage is interrupted at the solenoid, the guard locking is released and the guard can be opened directly!

The guard can be opened as long as no voltage is applied to the guard locking solenoid.

If a voltage is applied to the guard locking solenoid, the guard locking pin is held in the extended position and the guard is locked.

6.8. Switching states

The detailed switching states for your locking module can be found in the system status table. All safety outputs, monitoring outputs and display LEDs are described there.

	Guard closed and locked	Guard closed and not locked	Guard open
	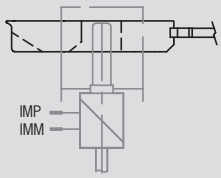	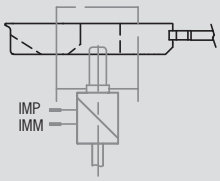	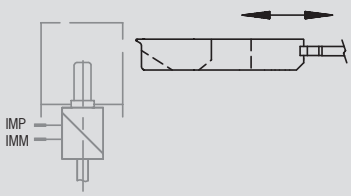
Voltage on guard locking solenoid MGBS-L1	off	on	(irrelevant)
Voltage on guard locking solenoid MGBS-L2	on	off	(irrelevant)
Safety outputs FO1A and FO1B	on	off	off
Guard locking monitoring output OL	on	off	off
Door monitoring output OD	on	on	off

7. System overview

7.1. MGBS-P-… (optionally with escape release)

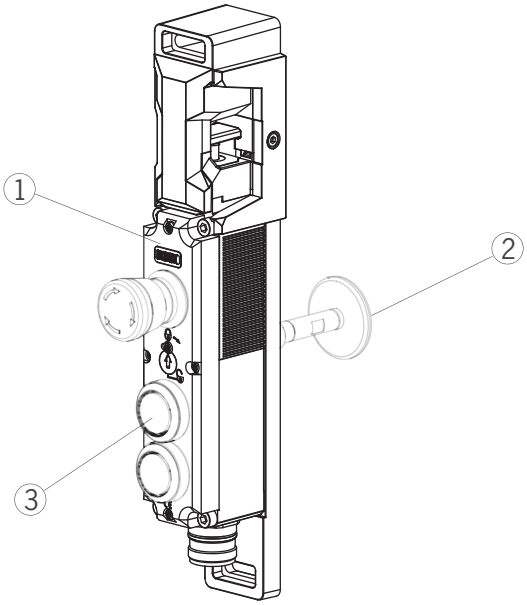

Key:

① Locking module or interlocking module

② Optionally with escape release

③ Optionally with Extended version

NOTICE

- Depending on the version, additional controls and indicators may be integrated.
- Depending on the version, a mounting plate can be included. See enclosed data sheet.

7.2. MGBS-H-…

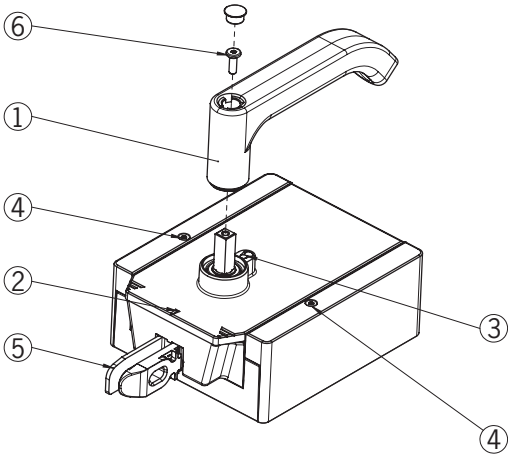

Key:

① Door handle

② Marking for adjustment

③ Locking pin for changing the direction of rotation of the door handle

④ Locking screws T10 for housing cover

⑤ Bolt tongue

⑥ Fixing screw

NOTICE

- Depending on the version, a mounting plate can be included. See enclosed data sheet.

7.3. AE-R-S1-…(for versions with escape release)

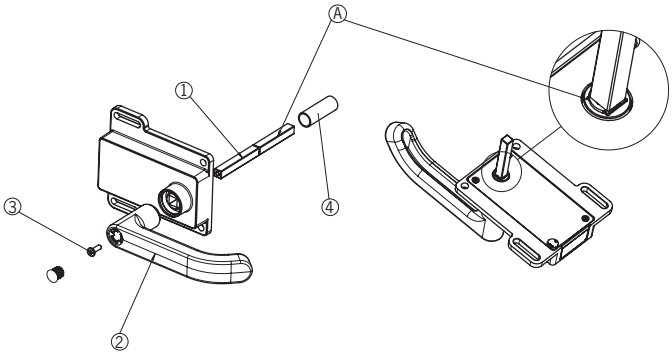

Key:

A Snap ring

① Actuation axis

② Door handle

③ Fixing screw

④ Protective sleeve

NOTICE

- Depending on the version, a mounting plate can be included. See enclosed data sheet.

EN

7.4. Dimension drawing (example illustration)

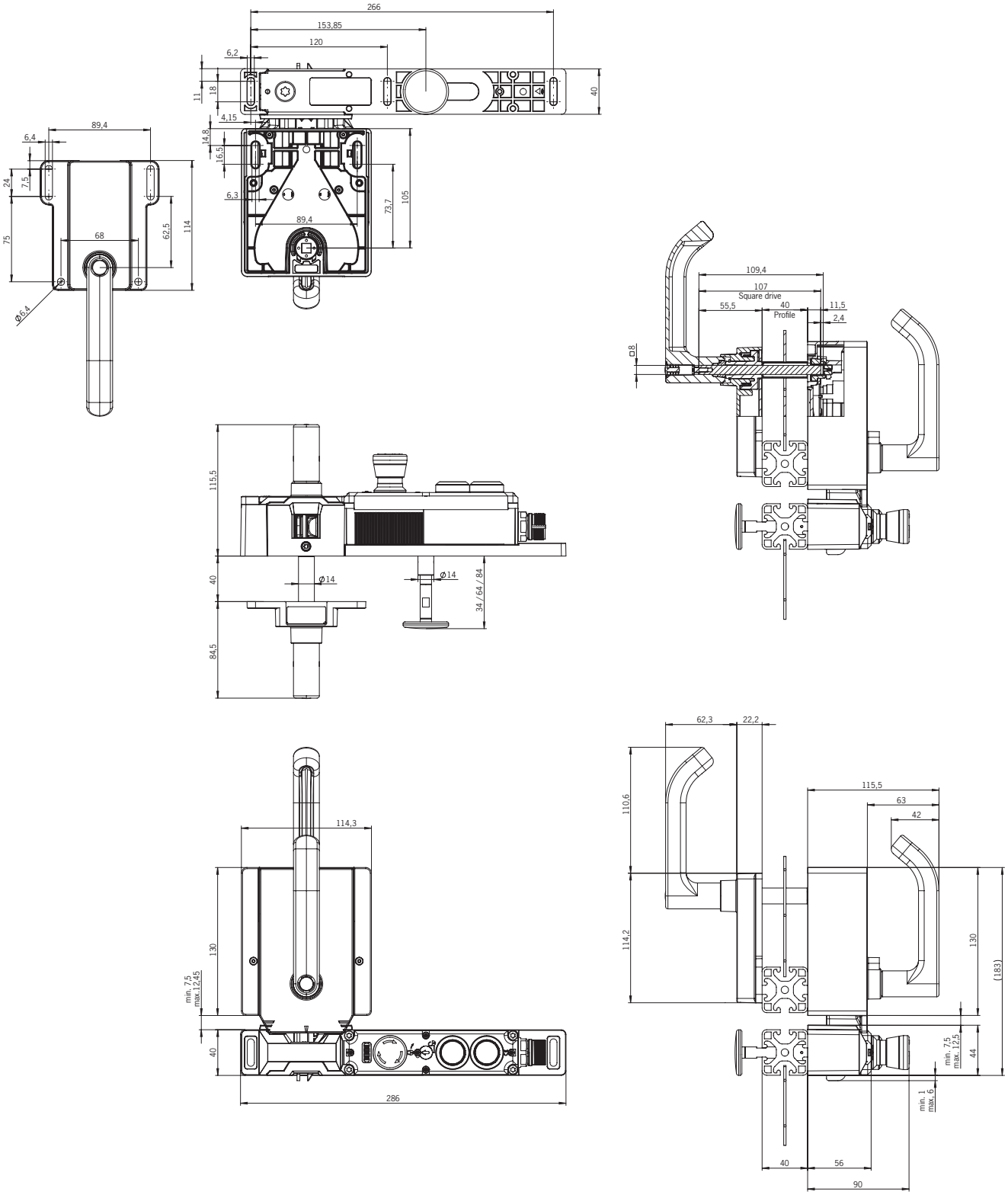

7.5. Drilling pattern (example illustration)

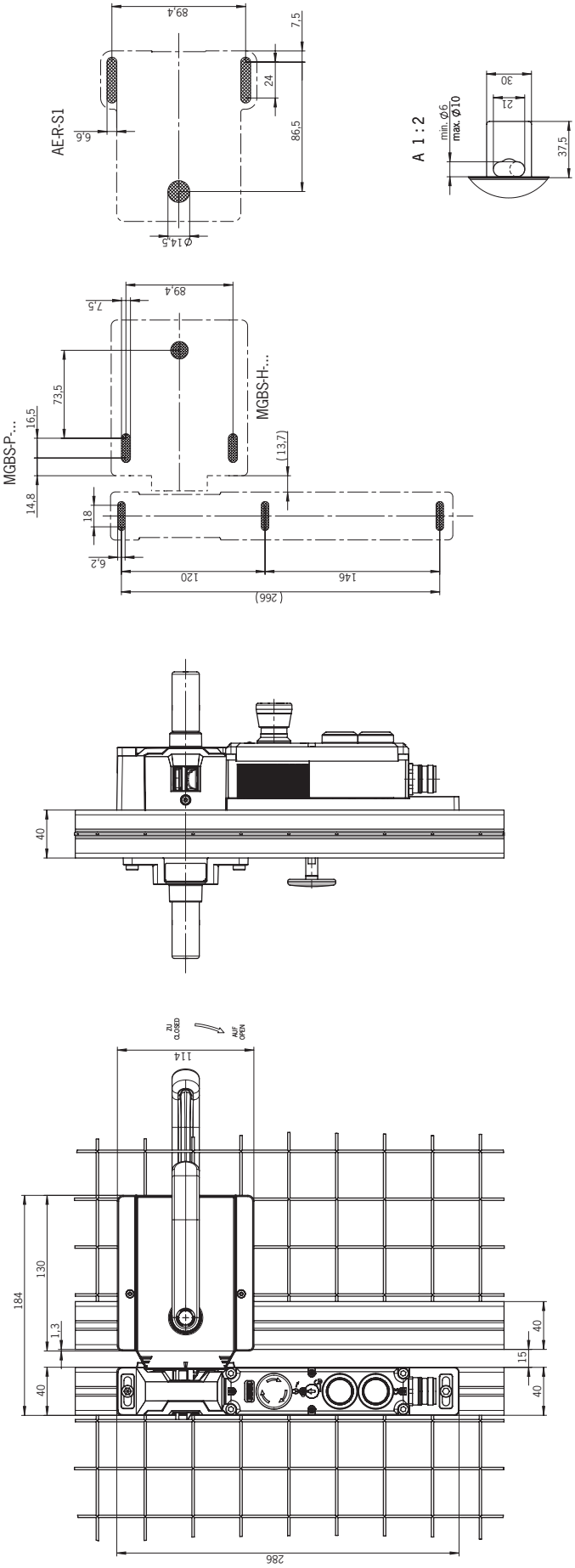

EN

8. Manual release

Important!

No further release functions can be retrofitted on Extended variants with control elements in position 1 (S1) and position 2 (S2).

Some situations require the guard locking to be released manually (e.g. malfunctions or an emergency). A function test should be performed after release.

More information on this topic can be found in the standard EN ISO 14119:2013, section 5.7.5.1. The device can feature the following release functions:

8.1. Auxiliary release and auxiliary key release

In the event of malfunctions, the guard locking can be released with the auxiliary release irrespective of the state of the solenoid.

The safety outputs are switched off when the auxiliary release is actuated. Use the safety outputs to generate a stop command.

The monitoring output OL is switched off; OD can assume an undefined state. Open the guard and close it again after resetting the auxiliary release. The device will then operate normally again.

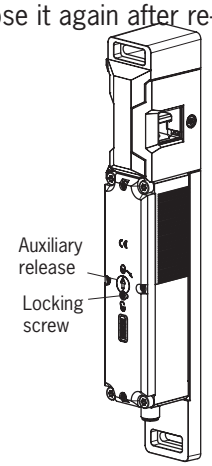

8.1.1. Actuating auxiliary release

1. Unscrew locking screw.
2. Using a screwdriver, turn the auxiliary release to in the direction of the arrow.

➡ Guard locking is released.

Important!

- The tongue on the handle module must not be under tensile stress during manual release.
- After use, reset the auxiliary release and screw in and seal the locking screw (e.g. with sealing lacquer).
- The auxiliary key release must not be used to lock the locking module during servicing to prevent activation of guard locking, for example.
- Loss of the release function due to mounting errors or damage during mounting.
- Check the release function every time after mounting.
- Please observe the notes on any enclosed data sheets.

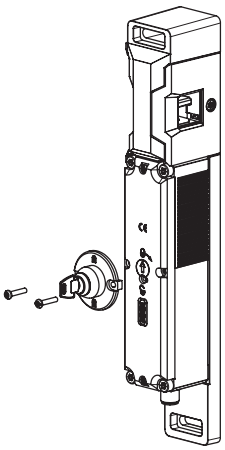

8.1.2. Actuating auxiliary key release

On devices with auxiliary key release (can be retrofitted), simply turn the key to release. Function as for auxiliary release. For mounting, see the auxiliary key release supplement.

8.2. Emergency release

Permits opening of a locked guard from outside the danger zone without tools. For mounting, see the mounting supplement.

Important!

- It must be possible to operate the emergency release manually from outside the protected area without tools.
- The emergency release must possess a marking indicating that it may be used only in an emergency.
- The handle module must not be under tensile stress during manual release.
- The emergency release must be sealed or the misuse of the release function must be prevented in the control system.
- The release function meets all other requirements from EN ISO 14119.
- The emergency release meets the requirements of Category B according to EN ISO 13849-1:2015.
- Loss of the release function due to mounting errors or damage during mounting.
- Check the release function every time after mounting.
- Please observe the notes on any enclosed data sheets.

8.2.1. Actuating emergency release

- Turn emergency release clockwise until it clicks into place.

➡ Guard locking is released.

To reset, press the snap-in bolt inward using a small screwdriver or similar tool and turn the emergency release back.

The safety outputs ⊣▷ are switched off when the emergency release is actuated. Use the safety outputs ⊣▷ to generate a stop command.

The monitoring output OL is switched off; OD can assume an undefined state. Open the guard and close it again after resetting the emergency release. The device will then operate normally again.

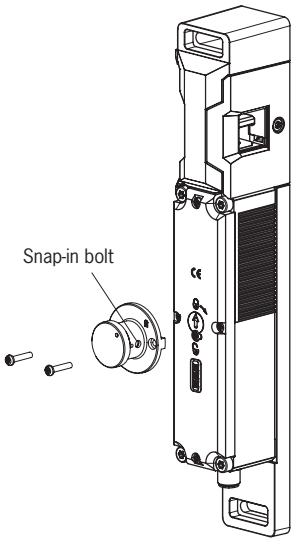

EN

8.3. Escape release (optional)

8.3.1. AE-R-S1 (for versions with escape release)

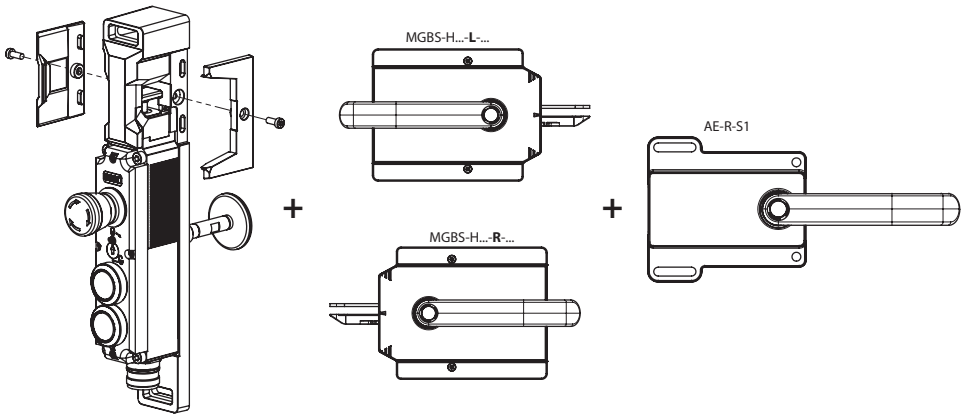

8.3.2. Preparing AE-R-S1

Profile width	Length required for actuation axis		Which EUCHNER parts are required?	Necessary work steps
	Without plates	With mounting plates (4 mm each)		
D	D+9	D+17		
30 mm	39 mm	47 mm	Standard inner door handle with 107 mm axis (order no.158322)	Shorten to required length
40 mm	49 mm	57 mm	Standard inner door handle with 107 mm axis (order no.158322) If necessary, extended actuation axis (order no. 106761)	Without *mounting plates*: None With *mounting plates*: Use extended actuation axis and protective sleeve and shorten to required length
45 mm	54 mm	62 mm	Standard inner door handle with 107 mm axis (order no.158322) **and** extended actuation axis (order no. 106761)	Use extended actuation axis and protective sleeve and shorten to required length
50 mm	59 mm	67 mm	Standard inner door handle with 107 mm axis (order no.158322) **and** extended actuation axis (order no. 106761)	Use extended actuation axis and protective sleeve and shorten to required length

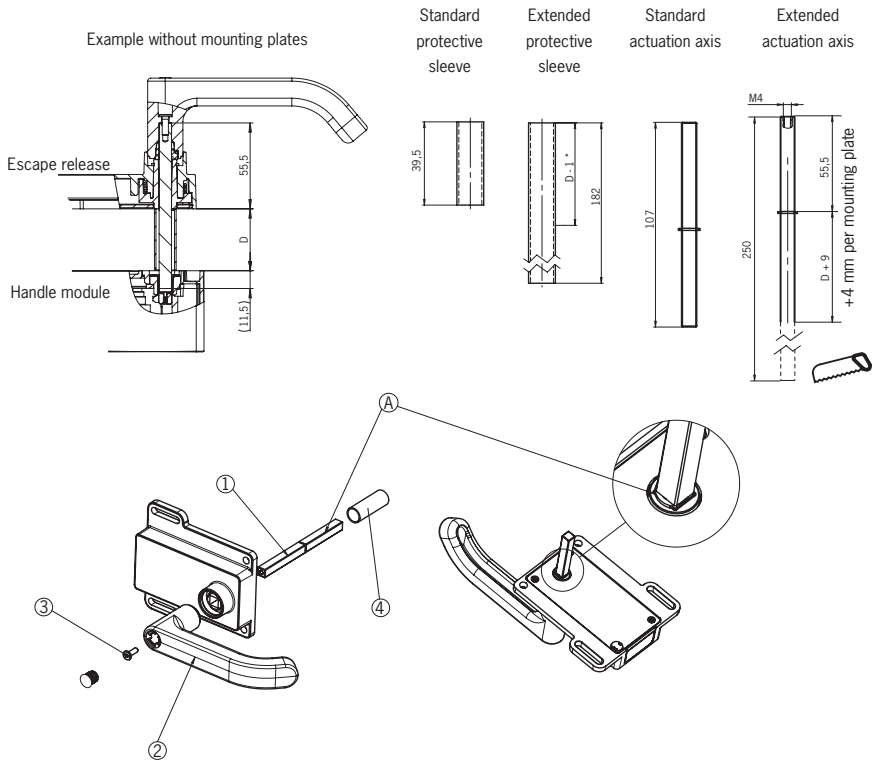

① Insert actuation axis.

The snap ring A must be in contact with the inner door handle B.

② Fit door handle.

③ Tighten fixing screw to 2 Nm.

④ Fit protective sleeve.

EN

8.4. Lockout mechanism

The lockout mechanism can be secured with padlocks (see *Figure 1*). This is intended to prevent people from being locked in unintentionally. The lockout mechanism does not fulfill any safety function.

➡ To pivot out, press the grooved part (possible only with bolt tongue retracted).

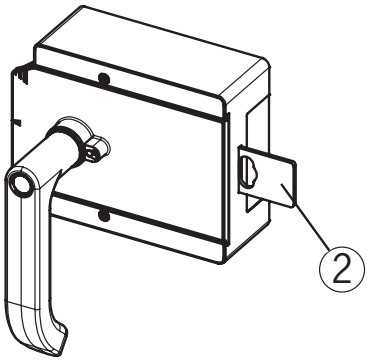

Key:
① Automatically extending lockout mechanism (optional)
Padlock ∅ min. 6 mm, ∅ max. 10 mm

Notice:
You can fit up to three locks ∅ 8 mm per lockout mechanism.

Figure 1: Lockout mechanism secured with padlock

8.5. Wire front release (bowden)

Release via a pull wire. Depending on the type of attachment, the wire front release can be used as an emergency release or escape release.

The following applies to non-latching wire front releases.

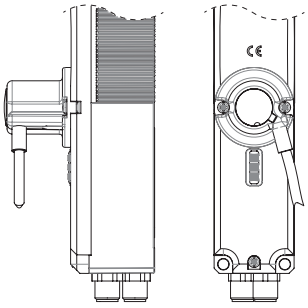

If the release is to be used as an emergency release, one of the following measures must be taken (see EN ISO 14119:2013, section 5.7.5.3):

- Install the release so that it can be reset only with the aid of a tool.
- Alternatively, the reset can be undertaken at the control system level. E.g. by means of a plausibility check (status of the safety outputs does not match the guard locking activation signal).

The emergency-release specifications in chapter *8.2* on *Page 15* apply irrespective of this information.

ⓘ	**Important!** - The wire front release meets the requirements of Category B according to EN ISO 13849-1:2015. - The correct function depends on the laying of the pull wire and on the attachment of the pull handle, and this is the responsibility of the plant manufacturer. - The handle module must not be under tensile stress during manual release.

8.5.1. Laying wire front release

ⓘ	**Important!** - Loss of the release function due to mounting errors, damage or wear. - Check the release function every time after mounting. - When routing the wire front release, ensure that it operates smoothly. - Observe the min. bending radius (100 mm) and minimize the number of bends. - The locking module must not be opened. - Observe the notes on the enclosed data sheets.

EN

9. Changing actuating direction of the locking module

NOTICE

- Please read the operating instructions of the device before use!
- If a data sheet is included with the product, the information on the data sheet applies.
- When using sliding doors, you are recommended to use the door knob AY-DKB…
- When changing the actuating direction please use a screwdriver (TX20).
- The actuating direction of handle module MGBS-H-… cannot be changed.

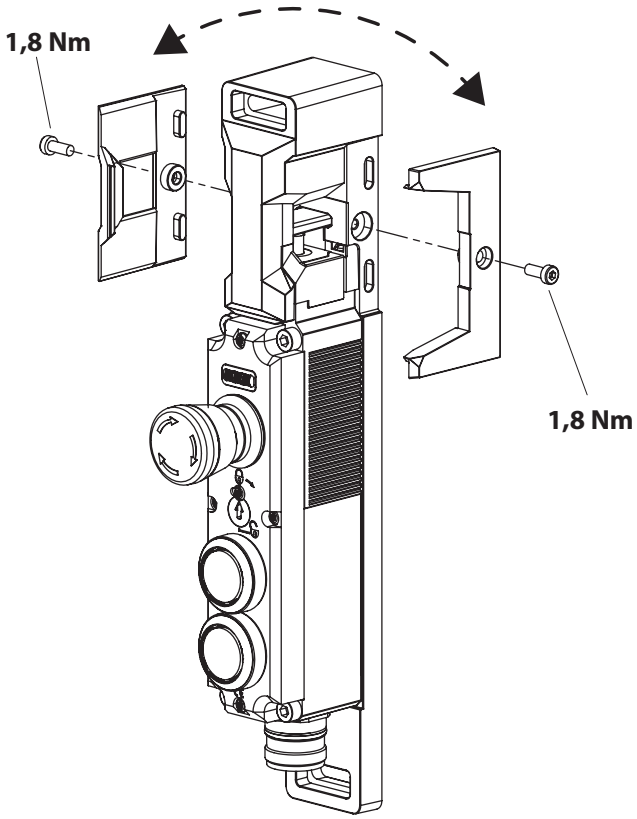

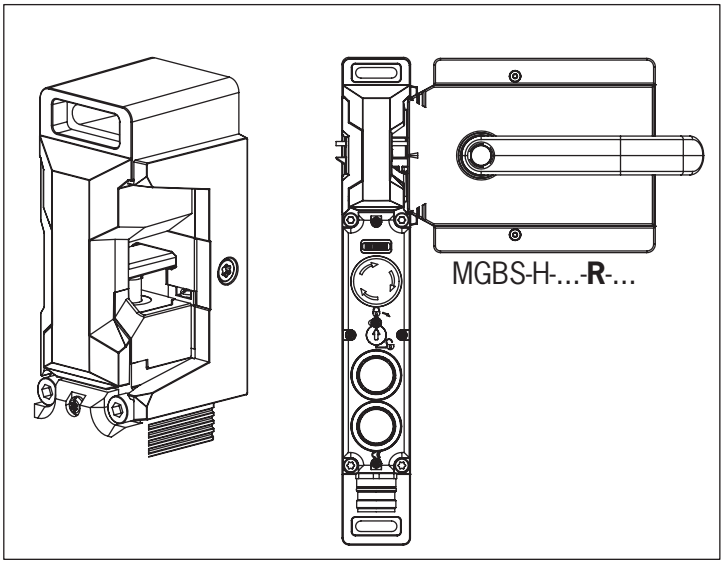

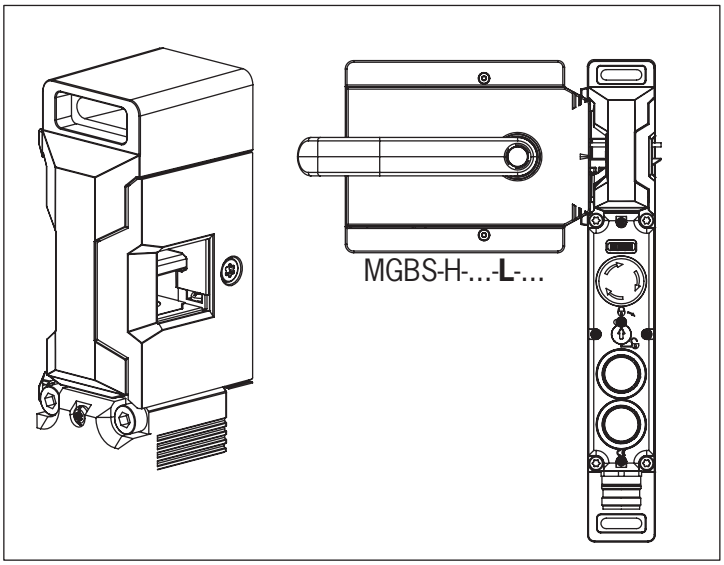

10. Mounting

CAUTION

Locking modules must not be bypassed (bridging of contacts), turned away, removed or otherwise rendered ineffective.

- Observe EN ISO 14119:2013, section 7, for information about reducing the possibilities for bypassing an interlocking device.

NOTICE

Risk of damage to equipment and malfunctions as a result of incorrect installation.

- Locking modules and handle module must not be used as an end stop.
- Observe EN ISO 14119:2013, sections 5.2 and 5.3, for information about mounting the locking module and the handle module.
- Protect the switch head against damage, as well as penetrating foreign objects such as swarf, sand and blasting shot, etc.
- Observe the min. door radii (see chapter *7.4. Dimension drawing (example illustration) on page 12*).
- Observe the tightening torque for fastening the locking module (max.1.4 Nm)

10.1. Mounting examples

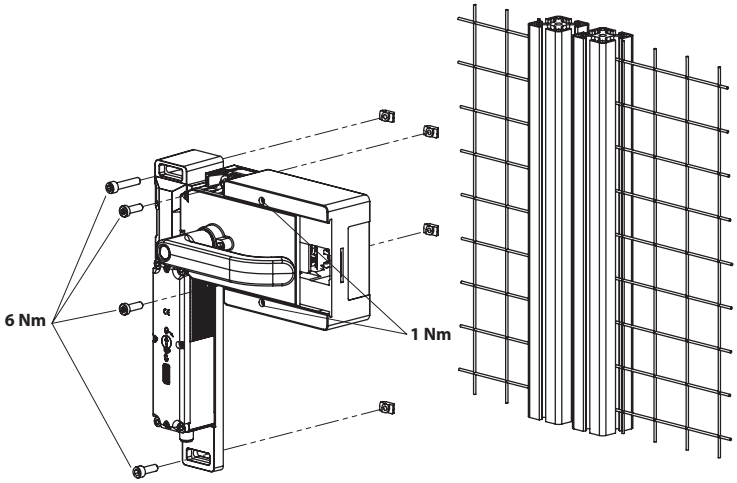

Figure 2: Mounting without escape release and without inner door handle

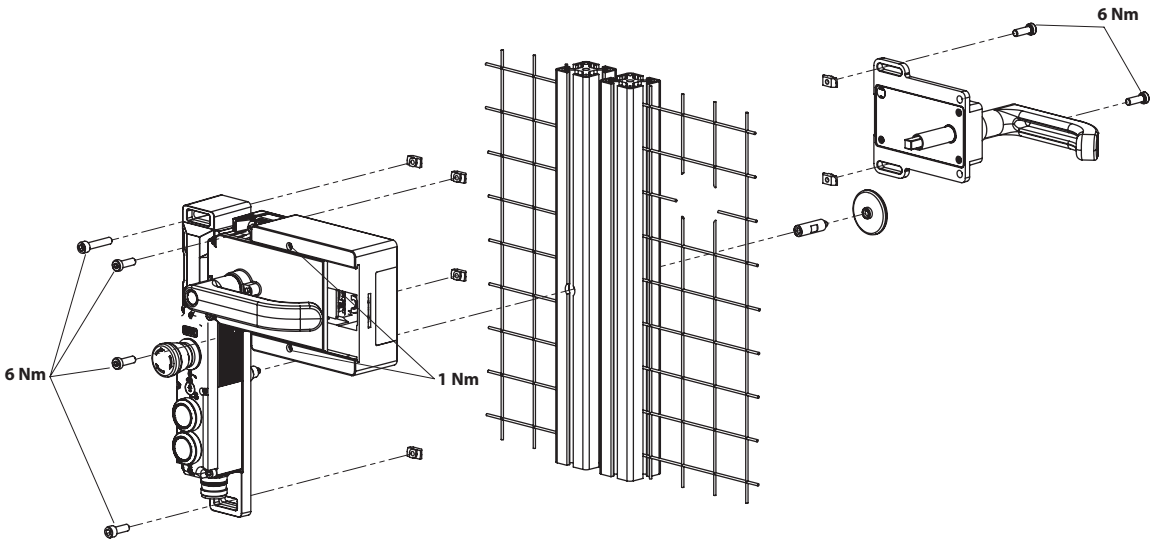

Figure 3: Mounting with escape release and inner door handle

EN

10.2. Actuating escape release

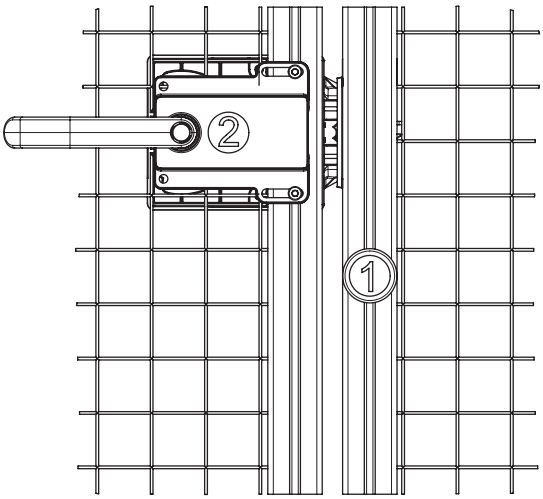

① Press the red release knob to the end stop.

② Actuate door handle on inside

11. Electrical connection

The following connection options are available:

- Separate operation
- Series connection with Y-distributors from EUCHNER (only with M12 plug connector)
- Series connection, e.g. with wiring in the control cabinet
- Operation on an AR evaluation unit (only for MGBS-Extended).

WARNING

If there is a mistake, loss of the safety function due to incorrect connection.

- To ensure safety, both safety outputs (FO1A and FO1B) must always be evaluated.
- Monitoring outputs must not be used as safety outputs.
- Lay the connecting cables with protection to prevent the risk of short circuits.

CAUTION

Risk of damage to equipment or malfunctions as a result of incorrect connection.

- The power supply for the evaluation electronics is electrically isolated from the power supply for the guard locking solenoid.
- Do not use a control system with pulsing or switch off the pulsing function in your control system. The device generates its own test pulses on the output lines FO1A/FO1B. A downstream control system must tolerate these test pulses, which may be up to 1 ms long on AR devices.
  The test pulses on AR devices are also output when the safety outputs are switched off. Depending on the inertia of the downstream device (control system, relay, etc.), this can lead to short switching processes.
- The inputs on a connected evaluation unit must be positive switching, as the two outputs on the locking module deliver a level of +24 V in the switched-on state.
- All the electrical connections must either be isolated from the mains supply by a safety transformer according to IEC 61558-2-6 with limited output voltage in the event of a fault, or by other equivalent isolation measures (PELV).
- All electrical outputs must have an adequate protective circuit for inductive loads. The outputs must be protected with a free-wheeling diode for this purpose. RC interference suppression units must not be used.
- Power devices which are a powerful source of interference must be installed in a separate location away from the input and output circuits for signal processing. The cable routing for safety circuits should be as far away as possible from the cables of the power circuits.
- To avoid EMC interference, the physical environmental and operating conditions at the installation site of the device must comply with the requirements according to the standard EN 60204-1:2006, section 4.4.2 (EMC).

CAUTION

Please pay attention to any interference fields from devices such as frequency converters or induction heating systems. Observe the EMC instructions in the manuals from the respective manufacturer.

Important!

If the device does not appear to function when operating voltage is applied (e.g. green STATE LED does not flash), the locking module must be returned unopened to the manufacturer.

EN

11.1. Notes about c UL us

Important!

- For use and operation as per the c UL us requirements [1], a power supply with the feature “for use in class 2 circuits” must be used.
  Alternative solutions must comply with the following requirements:
  Electrically isolated power supply unit in combination with fuse as per UL248. This fuse should be designed for max. 3.3 A and should be integrated into the 30 V DC voltage section.
- For use and applications as per the c UL us requirements [1], a connection cable listed under UL category code CYJV/7, min. 24 AWG, min 80 °C, must be used.

1) Note on the scope of the UL approval: The devices have been tested as per the requirements of UL508 and CSA/C22.2 no. 14 (protection against electric shock and fire).

11.2. Safety in case of faults

- The operating voltage UB and the solenoid voltage IMP are reverse polarity protected.
- The safety outputs FO1A/FO1B are short circuit-proof.
- A short circuit between FO1A and FO1B is detected by the locking module.
- A short circuit in the cable can be excluded by laying the cable with protection.

11.3. Fuse protection for power supply

The power supply must be provided with fuse protection depending on the number of locking modules and current required for the outputs. The following rules apply:

Max. current consumption of an individual locking module I_{max}

I_{max} = $I_{UB} + I_{FO1A+FO1B} + I_{OL} + I_{OD}$

I_{UB} = Operating current of locking module (40 mA)

I_{OL}/I_{OD} = Load current of monitoring outputs (max. 50 mA per monitoring output)

$I_{FO1A+FO1B}$ = Load current of safety outputs FO1A + FO1B (2 x max. 150 mA)

Max. current consumption of a switch chain ΣI_{max}

$\Sigma I_{max} = I_{FO1A+FO1B} + n \times (I_{UB} + I_{OL} + I_{OD})$

n = Number of locking modules connected

11.4. Requirements for connecting cables

CAUTION

Risk of damage to equipment or malfunctions as a result of incorrect connecting cables.

- Use connection components and connection cables from EUCHNER
- On the use of other connection components, the requirements in the following table apply. EUCHNER provides no warranty for safe function in case of failure to comply with these requirements.

Observe the following requirements with respect to the connecting cables:

For locking modules MGBS-…-AR-…-SAB-… with plug connectors 2 x M12

Parameter	Value	Unit
Conductor cross-section, min.	0.25	mm^2
R max.	60	Ω/km
C max.	120	nF/km
L max.	0.65	mH/km
Recommended cable type	LIYY 8 x 0.25 mm^2 or 5 x 0.34 mm^2	

For locking modules MGBS-…-AR-…-SH-… with plug connector M23 (RC18)

Parameter	Value	Unit
Conductor cross-section, min.	0.25	mm^2
R max.	60	Ω/km
C max.	120	nF/km
L max.	0.65	mH/km
Recommended cable type	LIFY11Y min. 19-core	

EN

11.5. Maximum cable lengths

Switch chains are permitted up to a maximum overall cable length of 200 m taking into account the voltage drop as a result of the cable resistance (see table below with example data and case example).

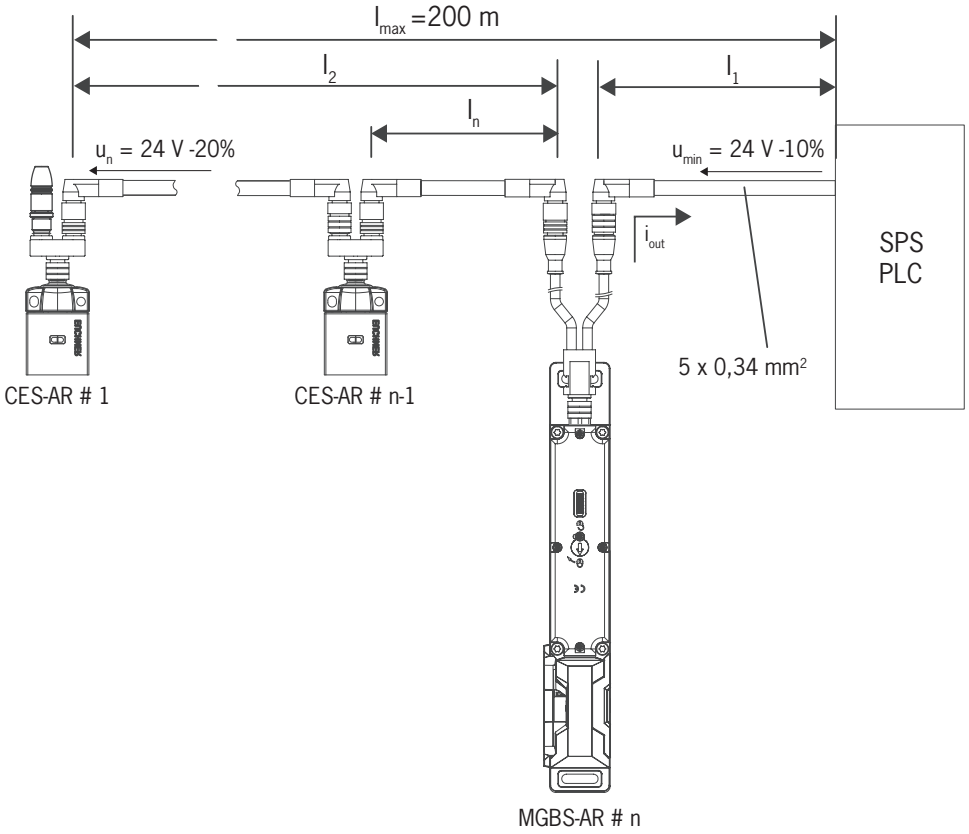

n Max. number of locking modules	$I_{FO1A/FO1B}$ (mA) Possible output current per channel FO1A/FO1B	l_1 (m) Max. cable length from the last locking module to the control system
5	10	150
	25	100
	50	80
	100	50
	150	25
6	10	120
	25	90
	50	70
	100	50
	150	25
10	10	70
	25	60
	50	50
	100	40
	150	25

11.5.1. Determining cable lengths using the example table

Example: 6 locking modules are to be used in series. Cabling with a length of 40 m is routed from a safety relay in the control cabinet to the last locking module (#6). Cables with a length of 20 m each are connected between the individual locking modules CES-AR/MGBS-L1-…

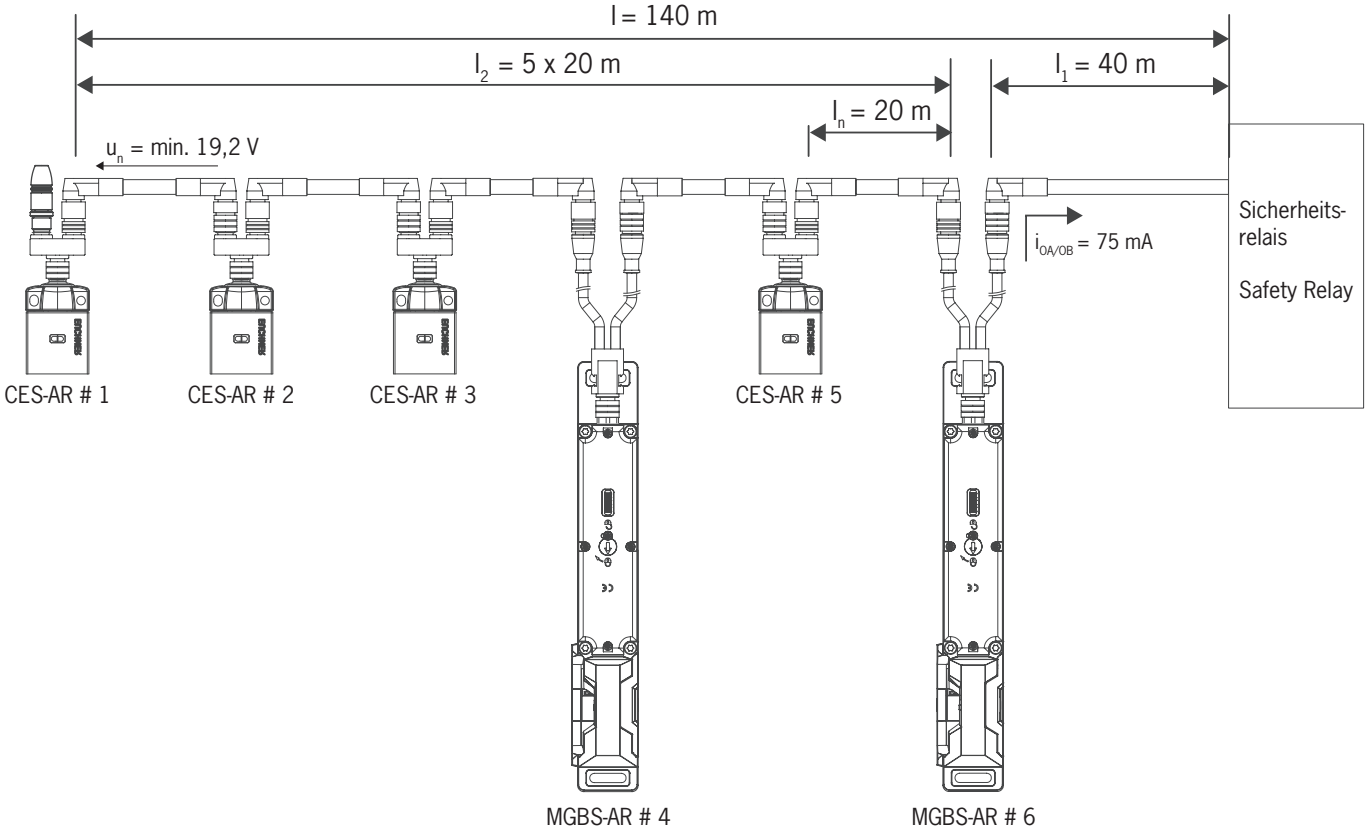

Figure 4: Circuit example with six CES-AR/MGBS-L1-…

A safety relay is connected downstream which consumes 75 mA at each of the two safety inputs. This operates over the whole temperature range with a voltage of 19.2 V (corresponds to 24 V -20%).

All the relevant values can now be determined using the example table:

1. Select the corresponding section in the column n (max. number of locking modules). In this case: 6 locking modules.
2. In the column $I_{FO1A/FO1B}$ (possible output current per channel FO1A/FO1B), find a current greater than or equal to 75 mA. In this case: 100 mA.

➡ It is then possible to determine the maximum cable length from the last locking module (#6) to the control system from the column l_1. In this case, a length of 50 m is permitted.

Result: The desired cable length l_1 of 40 m is below the permitted value from the table. The overall length of the switch chain l_{max} of 140 m is less than the maximum value of 200 m.

➡ The planned application is therefore functional in this form.

EN

11.6. Connector assignment locking module MGBS-…-AR-…-SAB-… with plug connector 2 x M12

Wiring diagram A

Plug connector (view of connection side)	Pin	Designation	Function	Wire color of connection cable 1)
2 x M12 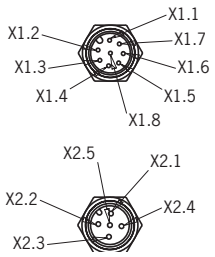	X 1.1	FI1B	Enable input for channel 2	WH
	X 1.2	UB	Operating voltage of AR electronics, 24 V DC	BN
	X 1.3	FO1A	Safety output, channel 1	GN
	X 1.4	FO1B	Safety output, channel 2	YE
	X 1.5	OL	Guard locking monitoring output	GY
	X 1.6	FI1A	Enable input for channel 1	PK
	X 1.7	0 V UB	Operating voltage of AR electronics, 0 V	BU
	X 1.8	RST	Reset input	RD
	X 2.1	IMM	Operating voltage of guard locking solenoid, 0 V	BN
	X 2.2	OD	Door monitoring output	WH
	X 2.3	OI	Diagnostic output	BU
	X 2.4	IMP	Operating voltage of guard locking solenoid, 24 V DC	BK
	X 2.5	-	Not used	GY

1) Only for standard EUCHNER connection cable

11.7. Connector assignment locking module MGBS-…-AR-…-SH-… with plug connector M23 (RC18)

Wiring diagram B

Plug connector (view of connection side)	Pin	Designation	Function	Wire color of connection cable 1)
M23 (RC18) 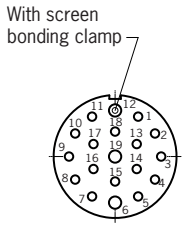	1	IMP	Operating voltage of guard locking solenoid, 24 V DC	VT
	2	FI1A	Enable input for channel 1	RD
	3	FI1B	Enable input for channel 2	GY
	4	FO1A	Safety output, channel 1	RD/BU
	5	FO1B	Safety output, channel 2	GN
	6	UB	Operating voltage of AR electronics, 24 V DC	BU
	7	RST	Reset input	GY/PK
	8	OD	Door monitoring output	GN/WH
	9	OI	Diagnostic output	YE/WH
	10	OL	Guard locking monitoring output	GY/WH
	11	-	n.c.	BK
	12	FE	Function earth (must be connected to meet the EMC requirements)	GN/YE
	13	-	n.c.	PK
	14	-	n.c.	BN/GY
	15	-	n.c.	BN/YE
	16	-	n.c.	BN/GN
	17	-	n.c.	WH
	18	IMM	Operating voltage of guard locking solenoid, 0 V	YE
	19	0 V UB	Operating voltage of AR electronics, 0 V	BN

1) Only for standard EUCHNER connection cable

11.8. Connector assignment of Y-distributor

(Only for version with plug connectors 2 x M12)

Connector assignment locking module MGBS-L1-… (plug X1, 8-pin plug) and Y-distributor (8-pin socket)

Pin	Function
X1.1	FI1B
X1.2	UB
X1.3	FO1A
X1.4	FO1B
X1.5	OL
X1.6	FI1A
X1.7	0 V
X1.8	RST

Strapping plug 097645
4-pin, plug
(figure similar)

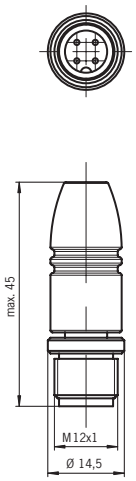

Y-distributor with connecting cable 111696 or 112395

Socket

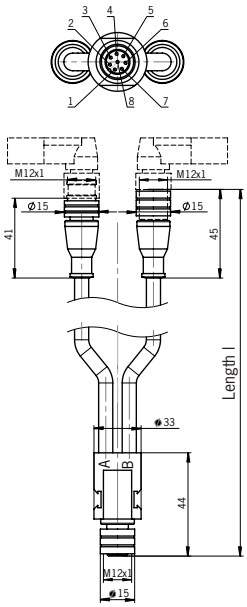

Order no.	Length l [mm]
111696	200
112395	1000

Pin Socket

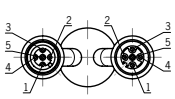

Pin	Function
X2.1	UB
X2.2	FO1A
X2.3	0 V
X2.4	FO1B
X2.5	RST

Pin	Function
X3.1	UB
X3.2	FI1A
X3.3	0 V
X3.4	FI1B
X3.5	RST

EN

11.9. Connection of a single MGBS-AR

If a single MGBS-AR is used, connect the device as shown in *Figure 5*. The monitoring outputs can be routed to a control system.

The locking modules can be reset via the RST input. To do this, a voltage of 24 V is applied to the RST input for at least 3 s. The RST input must be connected to 0 V if it is not used.

WARNING

If there is a mistake, loss of the safety function due to incorrect connection.

- To ensure safety, both safety outputs (FO1A and FO1B) must always be evaluated.

Important!

- The example shows only an excerpt that is relevant for the connection of the MGBS system. The example illustrated here does not show complete system planning. The user is responsible for safe integration into the overall system. Detailed application examples can be found at www.euchner.com. Simply enter the order number of your locking module in the search box. All available connection examples for the device can be found in “Downloads.”

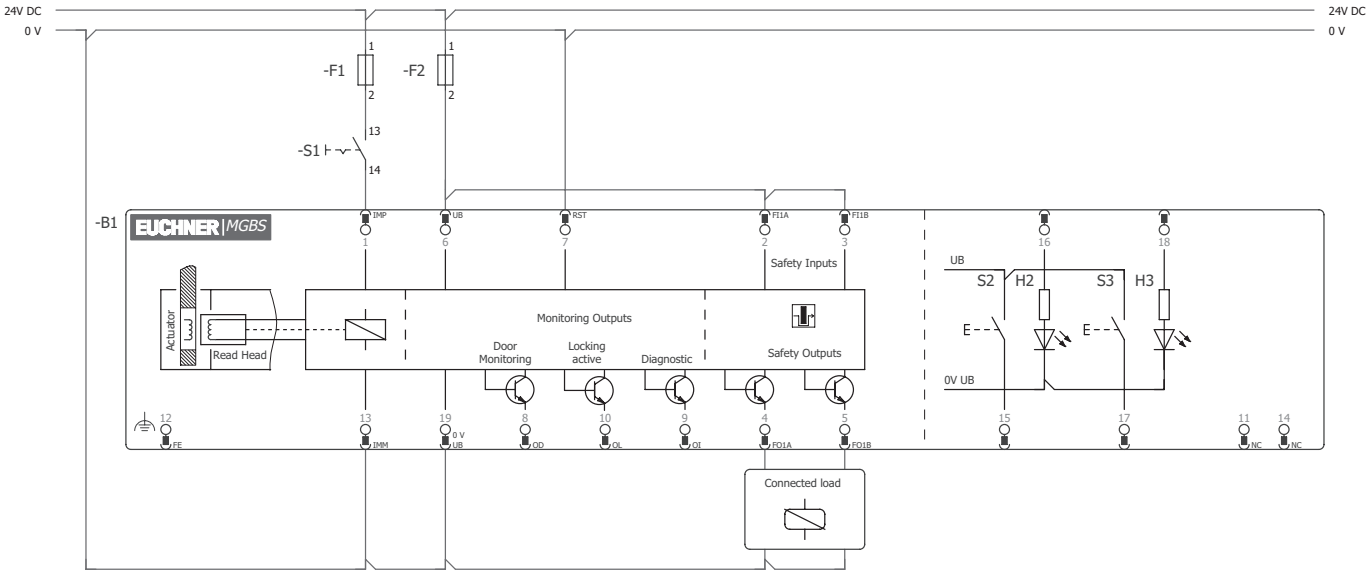

Figure 5: Connection example for separate operation, version with plug connectors M23

11.10. Connection of several MGBS-AR in a switch chain

Important!

- An AR switch chain may contain a maximum of 20 locking modules.
- The example shows only an excerpt that is relevant for the connection of the MGBS system. The example illustrated here does not show complete system planning. The user is responsible for safe integration into the overall system. Detailed application examples can be found at www.euchner.com. Simply enter the order number of your locking module in the search box. You will find all available connection examples for the device in Downloads.
- For information about the safety assessment for AR switch chains, see chapter *3. Description of the safety function on page 6*.

The series connection is shown here based on the example of the version with plug connectors 2 x M12. The series connection of the version with plug connector RC18 has similar behavior, but is realized using additional terminals in a control cabinet.

The locking modules in the version with plug connectors 2 x M12 are connected one after the other with the aid of pre-assembled connection cables and Y-distributors. If a guard is opened or if a fault occurs on one of the locking modules, the system shuts down the machine. A higher-level control system cannot, however, detect which guard is open or on which

locking module a fault has occurred with this connection technology.

The safety outputs are permanently assigned to the respective safety inputs of the downstream locking module. FO1A must be routed to FI1A and FO1B to FI1B. If the connections are interchanged (e.g. FO1A to FI1B), the device will switch to the fault state.

Always use the RST input in series connections. All locking modules in a chain can be reset at the same time with this reset input. To do this, a voltage of 24 V must be applied to the RST input for at least 3 s. If the RST input is not used in your application, it should be connected to 0 V.

Note the following on this aspect:

- A common signal must be used for all locking modules in the chain. This can be a changeover switch or the output of a control system. A pushbutton is not suitable because the reset must always be connected to GND during operation (see switch S3 in *Figure 6 on page 31*).
- Reset must always be performed simultaneously for all locking modules in the chain.

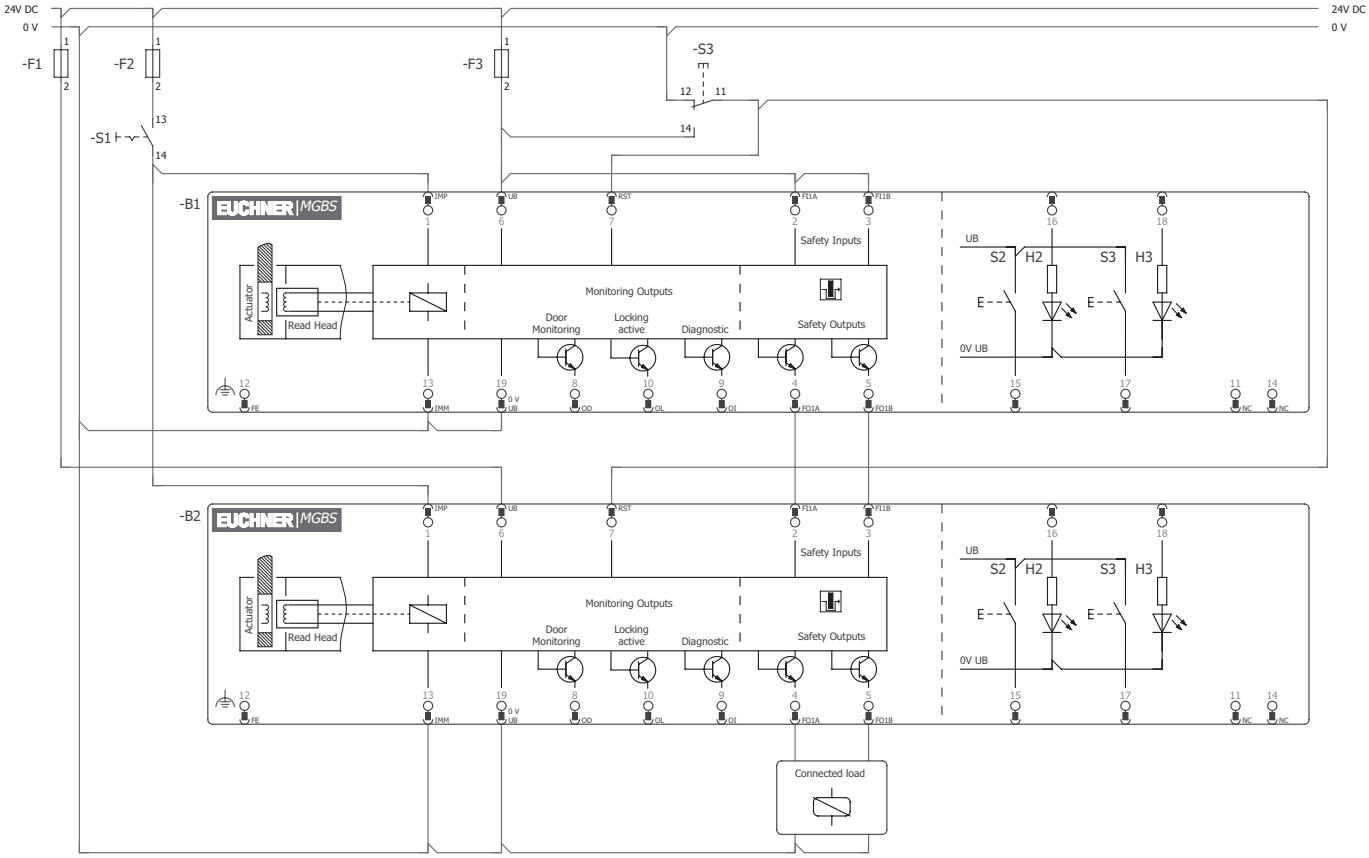

Figure 6: Connection example for one switch chain; version with plug connector M23

EN

11.11. Notes about operation on an AR evaluation unit

Some devices can be operated on an AR evaluation unit.

Please refer to the operating instructions for the relevant AR evaluation unit for more information.

Each of the devices occupies two monitoring outputs on the AR evaluation unit. The first monitoring output signals the guard position (HIGH when the guard is closed). The second monitoring output signals the position of guard locking (HIGH when guard locking is active).

NOTICE

Devices in the Extended version cannot be used with AR evaluation units.

11.12. Notes about operation with safe control systems

Please observe the following requirements for connection to safe control systems:

- Use a common power supply for the control system and the locking modules connected
- A pulsed power supply must not be used for UB. Tap the supply voltage directly from the power supply unit. If the power supply is connected to a terminal of a safe control system, this output must provide sufficient electrical current.
- Always connect inputs FI1A and FI1B directly to a power supply unit or to outputs FO1A and FO1B of another EUCHNER AR device (series connection). Pulsed signals must not be present at inputs FI1A and FI1B.
- The safety outputs (FO1A and FO1B) can be connected to the safe inputs of a control system. Prerequisite: the input must be suitable for pulsed safety signals (OSSD signals, e.g. from light grids). The control system must tolerate test pulses on the input signals. This normally can be set up by parameter assignment in the control system. Observe the notes of the control system manufacturer. For the pulse duration of your locking module, please refer to chapter *14. Technical data on page 38*.
- The following applies to single-channel control of guard locking:
  The guard locking (IMM) and the control system must have the same ground.
- For dual-channel control of the solenoid voltage by safe outputs of a control system, the following points must be observed (see also *Figure 7 on page 32*):
  - If possible, switch off the pulsing of the outputs in the control system.
  - Pulses up to a length of max. 5 ms are tolerated.

A detailed example of connecting and setting the parameters of the control system is available for many devices at www.euchner.com in the area Download » Applications » MGBS. The features of the respective device are dealt with there in greater detail.

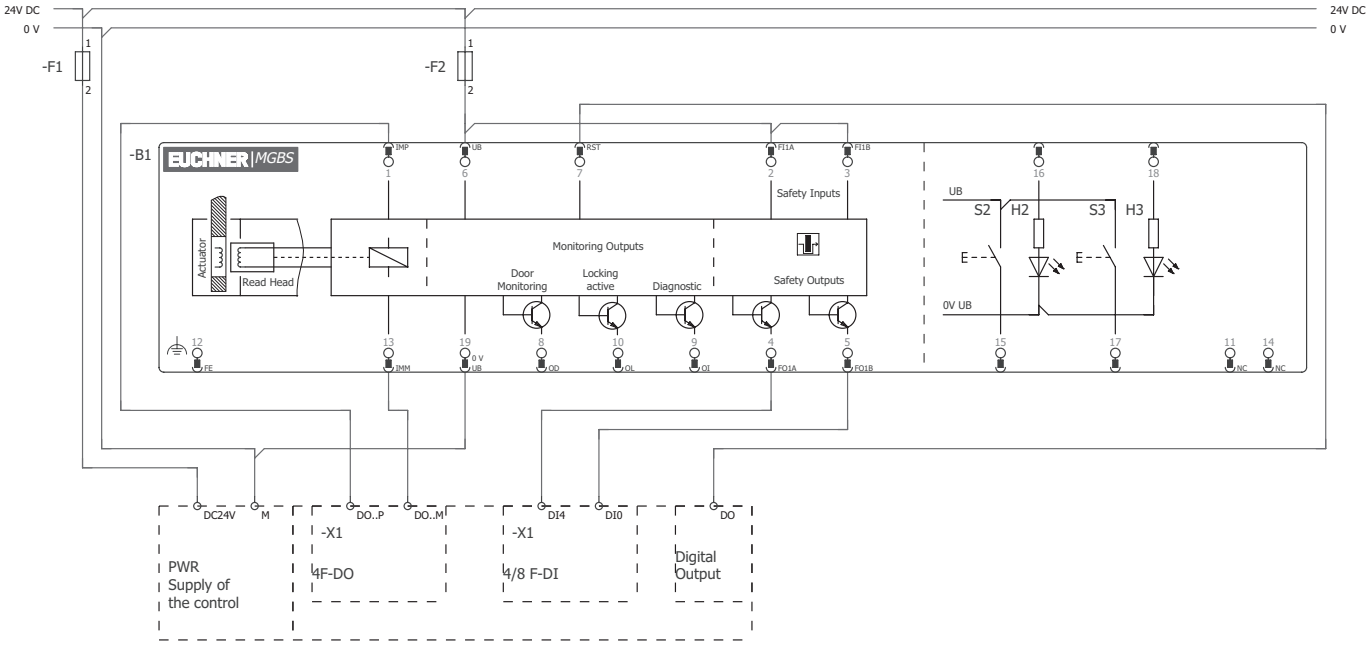

Figure 7: Connection example for the connection to ET200

11.13. Connection of guard locking control

11.13.1. Guard locking control for variants with IMM connection

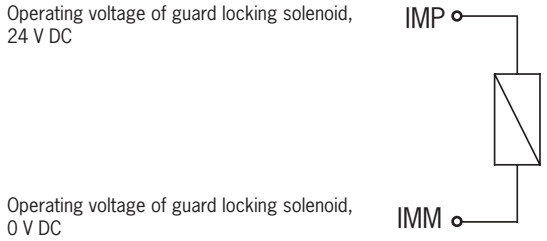

Figure 8: Connection example with IMM connection

11.13.2. Guard locking control for variants without IMM connection

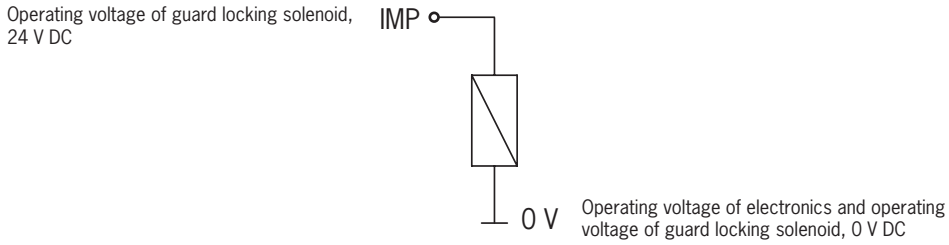

Figure 9: Connection example without IMM connection

EN

12. Setup

12.1. LED displays

You will find a detailed description of the signal functions in chapter *13. System status table on page 37.*

LED	Color
STATE	green
LOCK	yellow
DIA	red

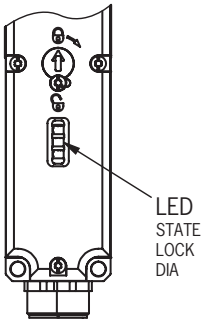

12.2. Teach-in function for handle module (only for unicode evaluation)

The handle module must be assigned to the locking module using a teach-in function before the system forms a functional unit.

During a teach-in operation, the safety outputs are switched off, i.e. the system is in the safe state.

The teach-in operation is fully automatic. The number of possible teach-in operations is unlimited.

Tip!

Prior to switching on, close the guard on which the handle module to be taught in is installed. The teach-in operation starts immediately after switching on. This feature simplifies above all teach-in with series circuits and on large installations.

Important!

- The teach-in operation may be performed only if the device does not have any internal errors.
- Devices in the condition as supplied remain in the teach-in standby state until you have successfully taught in the first handle module. Once taught in, locking modules remain in the teach-in standby state for approx. 3 min. after each switch-on.
- The locking module disables the code for the previous handle module if teach-in is carried out for a new handle module. Teach-in is not possible again immediately for this device if a new teach-in operation is carried out. The disabled code is released again in the locking module only after a third code has been taught in.
- The locking module can be operated only with the last handle module taught in.
- If, in the teach-in standby state, the locking module detects the handle module last taught in, the teach-in standby state is ended immediately and the locking module changes to the normal state.
- The handle module to be taught in is not activated if it is within the operating distance for less than 30 s.

12.2.1. Teaching in handle module

1. Establish teach-in standby:
   - Devices in the condition as supplied: unlimited teach-in standby after switching on
   - Locking module already taught in: teach-in standby is available for approx. 3 min after switching on

➡ Teach-in standby indication, STATE LED flashes 3x repeatedly

2. Insert the tongue on the handle module during teach-in standby.

➡ The automatic teach-in operation starts (duration approx. 30 s).
During the teach-in operation the STATE LED flashes (approx. 1 Hz).
Alternate flashing of the STATE and DIA LEDs acknowledges the successful teach-in operation.
Teach-in errors are indicated by the illumination of the red DIA LED and a flashing code on the green State LED (see chapter *13. System status table on page 37*).

3. Switch off operating voltage UB (min 3 s).

➡ The code of the handle module that was just taught in is activated in the locking module.

4. Switch on operating voltage UB.

➡ The device operates normally.

12.2.2. Teach-in function with series connection, replacing and teaching in device

It is recommended not to teach in the handle modules in the series connection but to teach them in one by one instead. Teach-in in a series connection works analogously to separate operation in principle. It is a prerequisite that the steps below are followed. Further steps might have to be observed for mixed switch chains (e.g. for chains with CES and CET). Observe the operating instructions for the other devices in the chain for this purpose.

Work on the wiring (e.g. during device replacement) should generally be performed in a de-energized state. On certain systems, it is nevertheless necessary to perform this work and subsequent teach-in during ongoing operation.

Input RST must be connected as shown in *Figure 6 on page 31* to permit this.

Proceed as follows:

1. Open the guard on which the locking module or handle module is to be replaced.
2. Mount the new locking module or handle module and prepare it for the teach-in operation (see chapter *12.2.1. Teaching in handle module on page 35*).
3. Close all guards in the chain and activate guard locking.
4. Actuate the reset for at least 3 s (24 V on RST).

➡ On the locking module at which a new handle module is positioned, the green LED flashes at approx. 1 Hz and the handle module is taught in. This takes approx. 30 s. Do not switch off during this time and do not actuate reset! The teach-in operation is complete when the STATE and DIA LEDs flash alternately.

5. Actuate the reset for at least 3 s (24 V on RST).

➡ The system restarts and then continues to function in normal operation.

EN

12.3. Functional check

⚠	**WARNING** Danger of fatal injury as a result of faults in installation and functional check. ‣ Before carrying out the functional check, make sure that there are no persons in the danger zone. ‣ Observe the valid accident prevention regulations.

12.3.1. Mechanical function test

The tongue on the handle module must slide easily into the actuating head. Close the guard several times to check the function. For devices with mechanical release (emergency release or escape release), the correct function of the release must be checked as well.

12.3.2. Electrical function test

After installation and any fault, the safety function must be fully checked. Proceed as follows:

1. Switch on operating voltage.

➡ The machine must not start automatically.

➡ The locking module carries out a self-test. The green STATE LED flashes for 10 s at 5 Hz. The green STATE LED then flashes at regular intervals.

2. Close all guards. In case of guard locking by solenoid force: activate guard locking.

➡ The machine must not start automatically. It must not be possible to open the guard.

➡ The green STATE LED illuminates continuously.

3. Enable operation in the control system.

➡ It must not be possible to deactivate guard locking as long as operation is enabled.

4. Disable operation in the control system and deactivate guard locking.

➡ The guard must remain locked until there is no longer any risk of injury.

➡ It must not be possible to start the machine as long as the guard locking is deactivated.

Repeat steps 2 - 4 for each guard.

13. System status table

Operating mode	Handle module/ door position	Safety outputs FO1A and FO1B	Guard locking monitoring output OL	Door monitoring output OD	LED indicator Output STATE (green)	LED indicator Output DIA (red) and diagnostic output OI	LED indicator Output LOCK (yellow)	State
Self-test	X	off	off	off	5 Hz (10 s)	○	○	Self-test after power-up
Normal operation	closed	on	on	on		○		Normal operation, door closed and locked
	closed	off	on	on	1 x inverse	○		Normal operation, door closed and locked, safety outputs not switched because: - Preceding device in the switch chain is signaling "door open" (only with series connection)
	closed	off	off	on	1 x inverse	○	○	Normal operation, door closed and **not** locked
	open	off	off	off	1 x	○	○	Normal operation, door open
Teach-in operation (only unicode)	open	off	off	off	3 x	○	○	Device in teach-in standby
	closed	off	X	on	1 Hz	○	○	Teach-in operation
	X	off	X	X	↔		○	Positive acknowledgment after completion of teach-in operation
Fault display	X	off	X	X	1 x		○	Fault in the teach-in operation (only unicode) Handle module removed from the operating distance prior to the end of the teach-in operation or faulty handle module.
	X	off	off	off	2 x		○	Input fault (e.g. missing test pulses, illogical switch state from previous switch in the switch chain)
	X	off	off	off	3 x		○	Read error (e.g. handle module faulty)
	X	off	off	off	4 x		○	Output fault (e.g. short circuits, loss of switching ability)
	X	off	X	X	5 x		○	Disabled handle module detected
	X	off	off	off	○		X	Internal error

Key to symbols	○			LED not illuminated
				LED illuminated
	10 Hz (8 s)			LED flashes for 8 s at 10 Hz
	3 x			LED flashes three times, and this is then repeated
	↔			LEDs flash alternately
	X			Any state

After the cause has been remedied, faults can generally be reset by opening and closing the guard. If the fault is still displayed afterward, use the reset function or briefly interrupt the power supply. Please contact the manufacturer if the fault could not be reset after restarting.

Important!

If you do not find the displayed device status in the system status table, this indicates an internal device fault. In this case, you should contact the manufacturer.

EN

14. Technical data

NOTICE

If a data sheet is included with the product, the information on the data sheet applies.

14.1. Technical data for locking module MGBS-AR

Parameter		Value min.	Value typ.	Value max.	Unit
General					
Material - Switch head - Switch housing			Die-cast zinc Reinforced thermoplastic		
Installation orientation			Any		
Degree of protection	with plug connector M12		IP 67/IP 69/IP 69K		
	with plug connector M23		IP67		
			(screwed tight with the related mating connector)		
Safety class according to EN IEC 61558			III		
Degree of contamination			3		
Mechanical life			1 x 10^6 operating cycles		
Ambient temperature at UB = 24 V		-20	-	+55	°C
Handle module approach speed, max.			20		m/min
Actuating/extraction/retention force at 20 °C			10/20/20		N
Locking force F_{max} 1)			3,900		N
Locking force F_{Zh} 1) according to EN ISO 14119			$F_{Zh} = F_{max}/1.3 = 3{,}000$		N
Weight			Approx. 0.42		kg
Connection (depending on version)			2 plug connectors M12, 5- and 8-pin / 1 plug connector RC18, 19-pin		
Operating voltage UB (reverse polarity protected, regulated, residual ripple < 5 %)			24 ± 15% (PELV)		V DC
Current consumption I_{UB}			40		mA
For the approval according to UL the following applies			Operation only with UL class 2 power supply, or equivalent measures		
Switching load according to UL			DC 24 V, class 2		
External fuse (operating voltage UB) 2)		0.25	-	8	A
External fuse (solenoid operating voltage IMP) 2)		0.5	-	8	A
Rated insulation voltage U_i		-	-	50	V
Rated impulse withstand voltage U_{imp}		-	-	0.5	kV
Rated conditional short-circuit current			100		A
Resilience to vibration			Acc. to EN 60947-5-3		
EMC protection requirements			Acc. to EN 60947-5-3		
Ready delay		-	8	11	s
Risk time for single device		-	-	260	ms
Risk time delay per device			5		ms
Switch-on time		-	-	400	ms
Discrepancy time		-	-	10	ms
Test-pulse duration			1		ms
Frequency band			120 ... 130		kHz
Safety outputs FO1A/FO1B			Semiconductor outputs, p-switching, short circuit-proof		
- Output voltage U_{FO1A}/U_{FO1B} 3) HIGH U_{FO1A}/U_{FO1B} LOW U_{FO1A}/U_{FO1B}		 UB - 1.5 0	 - -	 UB 1	V DC
Switching current per safety output		1	-	150	mA
Utilization category acc. to EN 60947-5-2			DC-13 24 V 150 mA Caution: Outputs must be protected with a free-wheeling diode in case of inductive loads		
Switching frequency 4)			0.5		Hz
Monitoring outputs OL, OI, OD			p-switching, short circuit-proof		
Output voltage		0.8 x UB	-	UB	V DC
Max. load		-	-	50	mA
Solenoid					
Solenoid operating voltage IMP (reverse polarity protected, regulated, residual ripple < 5 %)			DC 24 V +10%/-15%		
Solenoid current consumption I_{IMP}			400		mA
Power consumption			6		W
Duty cycle			100		%

Parameter	Value min.	Value typ.	Value max.	Unit
Reliability values acc. to EN ISO 13849-1				
Mission time		20		years
Monitoring of guard locking and the guard position				
Category		4		
Performance Level (PL)		e		
PFH_D		4.1×10^{-9}/h		
Control of guard locking				
Category		Depends on external control		
Performance Level (PL)				
PFH_D				

1) Dependent on the handle module used.
2) Trip characteristic medium slow-blow.
3) Values at a switching current of 50 mA without taking into account the cable lengths.
4) Corresponds to the actuation frequency.

14.1.1. Typical system times

Please refer to the technical data for the exact values.

Ready delay: After switch-on, the device carries out a self-test. The system is ready for operation only after this time.

Switch-on time of safety outputs: The max. reaction time t_{on} is the time from the moment when the guard is locked to the moment when the safety outputs switch on.

Simultaneity monitoring of safety inputs FI1A/FI1B: If the safety inputs have different switching states for longer than a specific time, the safety outputs (FO1A and FO1B) will be switched off. The device switches to fault state.

Risk time according to EN 60947-5-3: If a handle module moves outside the operating distance, the safety outputs (FO1A and FO1B) are deactivated at the latest after the risk time.

If several devices are operated in a series connection, the risk time of the overall device chain will increase with each device added. Use the following calculation formula:

$t_r = t_{r,e} + (n \times t_l)$

t_r = Total risk time

$t_{r,e}$ = Risk time, single device (see technical data)

t_l = Risk time delay per device

n = Number of additional devices (total number -1)

Discrepancy time: The safety outputs (FO1A and FO1B) switch with a slight time offset. They have the same signal state no later than after the discrepancy time.

Test pulses at the safety outputs: The device generates its own test pulses on the safety outputs (FO1A and FO1B). A downstream control system must tolerate these test pulses.

This can usually be set up in the control systems by parameter assignment. If parameter assignment is not possible for your control system or if shorter test pulses are required, please contact our support organization.

The test pulses are also output when the safety outputs are switched off.

EN

14.2. Radio frequency approvals

FCC ID: 2AJ58-05
IC: 22052-05

FCC/IC-Requirements

This device complies with part 15 of the FCC Rules and with Industry Canada's licence-exempt RSSs. Operation is subject to the following two conditions:

1) This device may not cause harmful interference, and

2) this device must accept any interference received, including interference that may cause undesired operation.

Changes or modifications not expressly approved by the party responsible for compliance could void the user's authority

to operate the equipment.

NOTE: This equipment has been tested and found to comply with the limits for a Class A digital device, pursuant to part 15 of the FCC Rules. These limits are designed to provide reasonable protection against harmful interference when the equipment is operated in a commercial environment. This equipment generates, uses, and can radiate radio frequency energy and, if not installed and used in accordance with the instruction manual, may cause harmful interference to radio communications.

Operation of this equipment in a residential area is likely to cause harmful interference in which case the user will be required to correct the interference at his own expense.

Le présent appareil est conforme aux CNR d'Industrie Canada applicables aux appareils radio exempts de licence. L'exploitation est autorisée aux deux conditions suivantes :

(1) l'appareil ne doit pas produire de brouillage, et

(2) l'utilisateur de l'appareil doit accepter tout brouillage radioélectrique subi, même si le brouillage est susceptible d'en compromettre le fonctionnement.

Supplier's Declaration of Conformity
47 CFR § 2.1077 Compliance Information

Unique Identifier:
MGBS-P-I-AR SERIES
MGBS-P-I1-AR SERIES
MGBS-P-I2-AR SERIES
MGBS-P-IBI-AR SERIES
MGBS-P-L1-AR SERIES
MGBS-P-L2-AR SERIES
MGBS-P-LBI-AR SERIES
MGBS-P-I-AP SERIES
MGBS-P-I1-AP SERIES
MGBS-P-I2-AP SERIES
MGBS-P-IBI-AP SERIES
MGBS-P-L1-AP SERIES
MGBS-P-L2-AP SERIES
MGBS-P-LBI-AP SERIES

Responsible Party – U.S. Contact Information
EUCHNER USA Inc.
6723 Lyons Street
East Syracuse, NY 13057

+1 315 701-0315
+1 315 701-0319
info(at)euchner-usa.com
http://www.euchner-usa.com

14.3. Dimension drawings, variants

Plug connectors 2 x M12

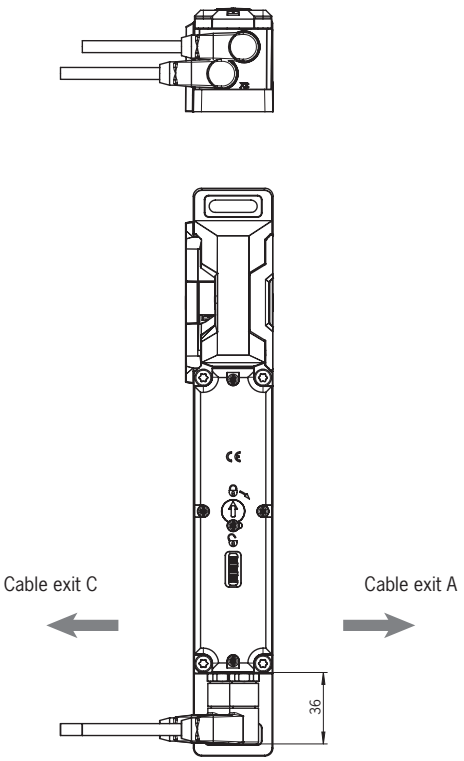

Plug connector M23

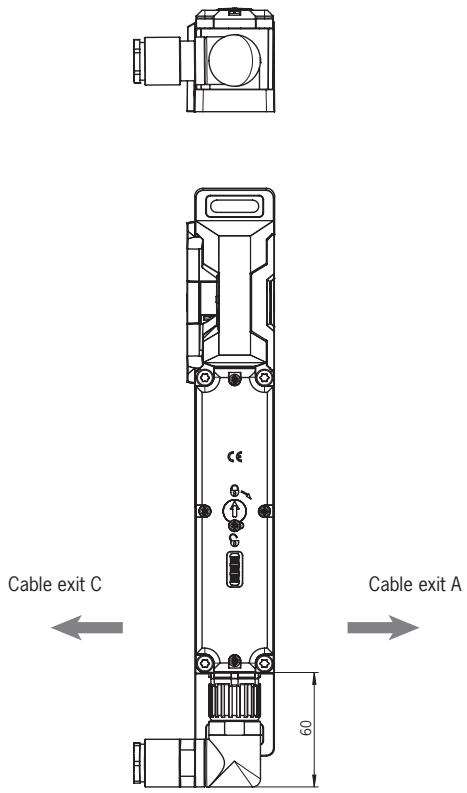

EN

With auxiliary key release

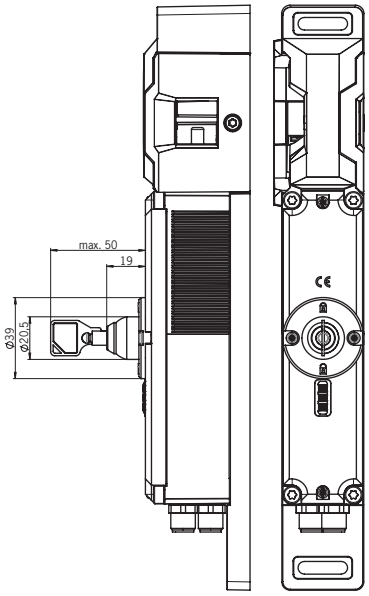

With release, automatic return

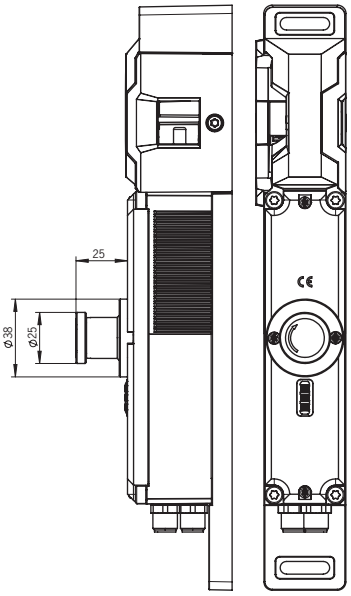

With emergency release

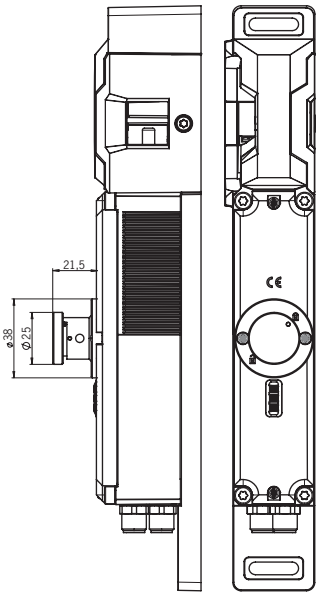

With wire front release

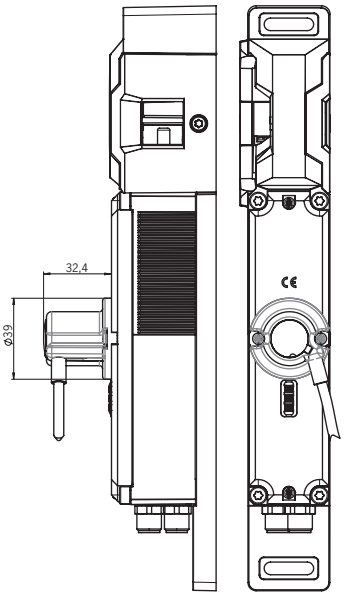

15. Ordering information and accessories

Tip!

Suitable accessories, e.g. cables or assembly material, can be found at www.euchner.com. To order, enter the order number of your item in the search box and open the item view. Accessories that can be combined with the item are listed in “Accessories.”

16. Inspection and service

WARNING

Danger of severe injuries due to the loss of the safety function.

- If damage or wear is found, the complete locking module and handle module must be replaced. Replacement of individual parts or assemblies is not permitted.
- Check the device for proper function at regular intervals and after every fault. For information about possible time intervals, refer to EN ISO 14119:2013, section 8.2.

Regular inspection of the following is necessary to ensure trouble-free long-term operation:

- Check the switching function (see chapter *12.3. Functional check on page 36*)
- Check all additional functions (e.g. escape release, lockout mechanism, etc.)
- Check the secure mounting of the devices and the connections
- Check for soiling

No servicing is required. Repairs to the device are only allowed to be made by the manufacturer.

NOTICE

The year of manufacture is given in the laser marking at the bottom right corner. The current version number in the format (V X.X.X) can also be found on the device.

17. Service

If servicing is required, please contact:

EUCHNER GmbH + Co. KG

Kohlhammerstraße 16

70771 Leinfelden-Echterdingen

Service telephone:

+49 711 7597-500

E-mail:

support@euchner.de

Internet:

www.euchner.com

EN

18. Declaration of conformity

CE

EUCHNER
More than safety.

EU-Konformitätserklärung
EU declaration of conformity
Déclaration UE de conformité
Dichiarazione di conformità UE
Declaración UE de conformidad

Original DE
Translation EN
Traduction FR
Traduzione IT
Traducción ES

2518511-01-08/18

Die nachfolgend aufgeführten Produkte sind konform mit den Anforderungen der folgenden Richtlinien (falls zutreffend):
The beneath listed products are in conformity with the requirements of the following directives (if applicable):
Les produits mentionnés ci-dessous sont conformes aux exigences imposées par les directives suivantes (si valable)
I prodotti sotto elencati sono conformi alle direttive sotto riportate (dove applicabili):
Los productos listados a continuación son conforme a los requisitos de las siguientes directivas (si fueran aplicables):

I:	Maschinenrichtlinie	2006/42/EG
	Machinery directive	*2006/42/EC*
	Directive Machines	*2006/42/CE*
	Direttiva Macchine	*2006/42/CE*
	Directiva de máquinas	*2006/42/CE*
II:	Funkanlagen-Richtlinie (RTTE / RED)	2014/53/EU
	Radio equipment directive	*2014/53/EU*
	Directive équipement radioélectrique	*2014/53/UE*
	Direttiva apparecchiatura radio	*2014/53/UE*
	Directiva equipo radioeléctrico	*2014/53/UE*
III:	RoHS Richtlinie	2011/65/EU
	RoHS directive	*2011/65/EU*
	Directive de RoHS	*2011/65/UE*
	Direttiva RoHS	*2011/65/UE*
	Directiva RoHS	*2011/65/UE*

Die Schutzziele der Niederspannungsrichtlinie 2014/35/EU und EMV Richtlinie 2014/30/EU werden gemäß Artikel 3.1 der Funkanlagen-Richtlinie eingehalten.
The safety objectives of the Low-voltage directive 2014/35/EU and EMC Directive 2014/30/EU comply with article 3.1 of the Radio equipment directive.
Les objectifs de sécurité de la Directive basse tension 2014/35/UE et Directive de CEM 2014/30/EU sont conformes à l'article 3.1 de la Directive équipement radioélectrique.
Gli obiettivi di sicurezza della Direttiva bassa tensione 2014/35/UE e Direttiva CEM 2014/30/UE sono conformi a quanto riportato nell´articolo 3.1 della Direttiva apparecchiatura radio.
Los objetivos de seguridad de la Directiva de bajo voltaje 2014/35/UE y Directiva CEM 2014/30/UE cumplen con el artículo 3.1 de la Directiva equipo radioeléctrico.

Folgende Normen sind angewandt:	a:	EN 60947-5-3:2013	f:	EN 50581:2012 (RoHS)
Following standards are used:	b:	EN ISO 14119:2013	g:	EN 50364:2010
Les normes suivantes sont appliquées:	c:	EN ISO 13849-1:2015	h:	EN 300 330 V2.1.1
Vengono applicate le seguenti norme:	d:	EN 62026-2:2013 (ASi)		
Se utilizan los siguientes estándares:	e:	EN 60947-5-5:1997/A1:2005/A11:2013		

Bezeichnung der Bauteile *Description of components* *Description des composants* *Descrizione dei componenti* *Descripción de componentes*	**Type** *Type* *Type* *Tipo* *Typo*	**Richtlinie** *Directives* *Directive* *Direttiva* *Directivas*	**Normen** *Standards* *Normes* *Norme* *Estándares*	**Zertifikats-Nr.** *No. of certificate* *Numéro du certificat* *Numero del certificato* *Número del certificado*
Sicherheitsschalter *Safety Switches* *Interrupteurs de sécurité* *Finecorsa di sicurezza* *Interruptores de seguridad*	MGBS-P...	I, II, III	a, b, c, f, g, h	UQS 123565
Sicherheitsschalter mit Not-Halt-Einrichtungen *Safety Switches with Emergency-Stop facilities* *Interrupteurs de sécurité avec appareillage arrêt d'urgence* *Finecorsa di sicurezza con dispositivi di arresto di emergenza* *Interruptores de seguridad con dispositivos de parada de emergencia*	MGBS-P...	I, II, III	a, b, c, e, f, g, h	UQS 123565
Griffmodul *Handle module* *Module de poignée* *Modulo maniglia* *Módulo con manilla*	MGBS -H...	I, II, III	a, b, c, f, g, h	UQS 123565
Zubehör *Accessory* *Accessoire* *Accessorio* *Accesorio*	AE-R...	I, II, III	a, b, c, f, g, h	UQS 123565

01.08.2018 - NG -HB - Blatt/*Sheet/ Page/Pagina/ Página* 1
EUCHNER GmbH + Co. KG Kohlhammerstraße 16 70771 Leinfelden-Echterdingen Tel. +49/711/7597-0 Fax +49/711/753316 www.euchner.de info@euchner.de

CE

EUCHNER
More than safety.

Genehmigung der umfassenden Qualitätssicherung (UQS) durch die benannte Stelle 0035
Approval of the full quality assurance system by the notified body 0035
Approbation du système d'assurance qualité complet par l'organisme notifié 0035
Approvazione del sistema di garanzia di qualità totale da parte dell'organismo notificato 0035
Aprobación del sistema de aseguramiento de calidad total por parte del organismo 0035 notificado

TÜV Rheinland Industrie Service GmbH
Alboinstr. 56
12103 Berlin
Germany

Die alleinige Verantwortung für die Ausstellung dieser Konformitätserklärung trägt der Hersteller:
This declaration of conformity is issued under the sole responsibility of the manufacturer:
La présente déclaration de conformité est établie sous la seule responsabilité du fabricant:
La presente dichiarazione di conformità è rilasciata sotto la responsabilità esclusiva del fabbricante:
La presente declaración de conformidad se expide bajo la exclusiva responsabilidad del fabricante:

EUCHNER GmbH + Co. KG
Kohlhammerstraße 16
70771 Leinfelden-Echterdingen
Germany

Leinfelden, August 2018

EUCHNER GmbH + Co. KG
Kohlhammerstraße 16
70771 Leinfelden-Echterdingen
Germany

i.A. Dipl.-Ing. Richard Holz
Leiter Elektronik-Entwicklung
Manager Electronic Development
Responsable Développement Électronique
Direttore Sviluppo Elettronica
D irector de desarrollo electrónico

i.A. Dipl.-Ing. (FH) Duc Binh Nguyen
Dokumentationsbevollmächtigter
Documentation manager
Responsable documentation
Responsabilità della documentazione
Agente documenta

EN

01.08.2018 - NG -HB - Blatt/*Sheet/ Page/Pagina/ Página* 2
EUCHNER GmbH + Co. KG Kohlhammerstraße 16 70771 Leinfelden-Echterdingen Tel. +49/711/7597-0 Fax +49/711/753316 www.euchner.de info@euchner.de

EN

Euchner GmbH + Co. KG
Kohlhammerstraße 16
70771 Leinfelden-Echterdingen
info@euchner.de
www.euchner.com

Edition:
2527246-01-08/19
Title:
Operating Instructions Safety System MGBS-P-L..-AR…
(Translation of the original operating instructions)
Copyright:
© EUCHNER GmbH + Co. KG, 08/2019

Subject to technical modifications; no responsibility is accepted for the accuracy of this information.