EUCHNER

Operating Instructions

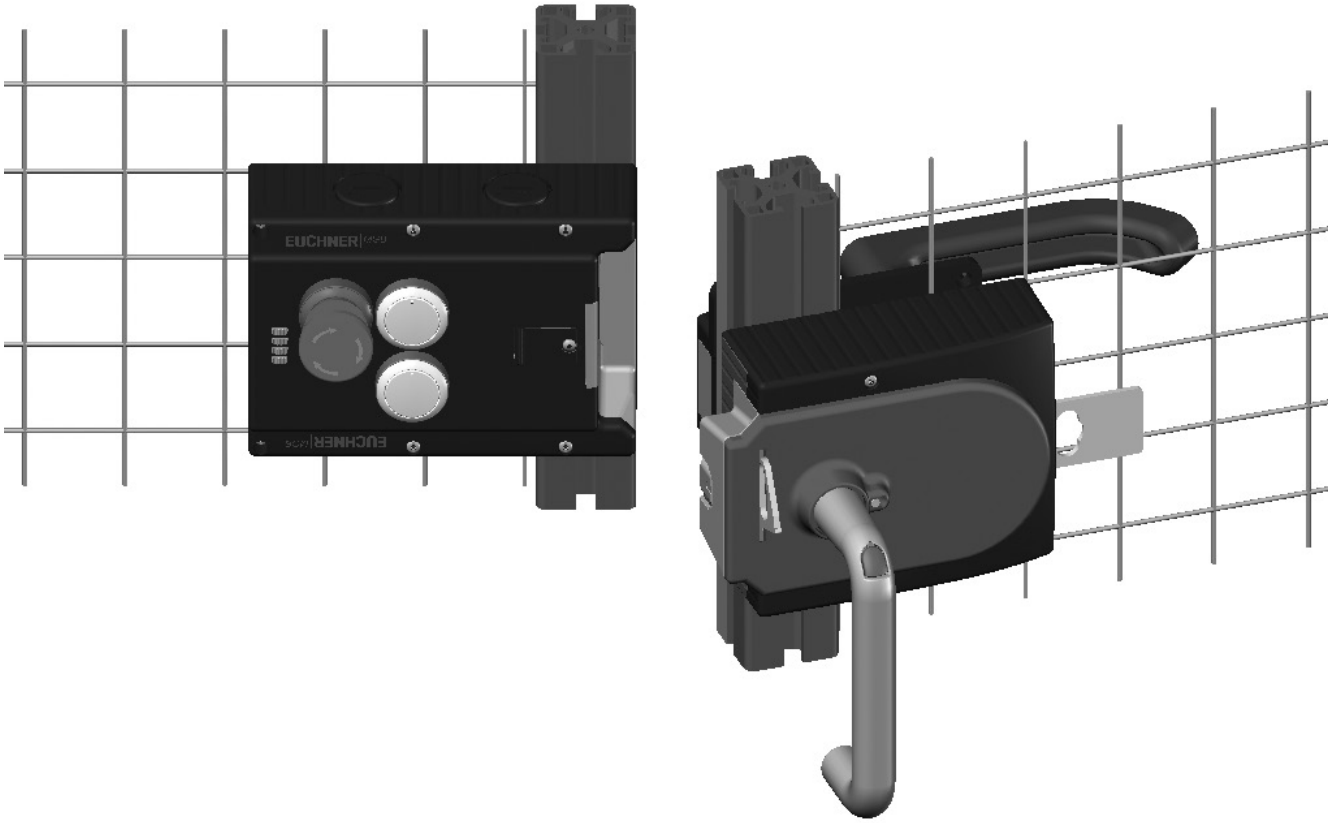

Safety Systems

MGB-L1…-AR.-… / MGB-L2…-AR.-…
MGB-L1…-AP.-… / MGB-L2…-AP.-…
from V3.0.0

EN

Contents

1. About this document 4
1.1. Scope 4
1.1.1. Notes on older product versions 4
1.2. Target group 4
1.3. Key to symbols 4
1.4. Supplementary documents 5

2. Correct use 6
2.1. Main differences between MGB-AP and MGB-AR 7

3. Description of the safety function 8

4. Exclusion of liability and warranty 9

5. General safety precautions 9

6. Function 10
6.1. Guard locking for version MGB-L1 10
6.2. Guard locking for version MGB-L2 11

7. System overview 12
7.1. Locking module MGB-L.-… 12
7.2. Handle module MGB-H-… 12
7.3. Escape release MGB-E-… (optional) 12
7.4. Dimension drawing 13

8. Manual release 14
8.1. Auxiliary release 14
8.2. Emergency unlocking (can be retrofitted) 15
8.2.1. Actuating emergency unlocking 15
8.3. Lockout mechanism 15
8.4. Escape release (optional) 16
8.4.1. Preparing escape release 16

9. Installation 18
9.1. Mounting lens 19

10. Changing actuating direction (here: from right to left) 21

11. Protection against environmental effects 22

12. Electrical connection 23
12.1. Notes about c UL us 24
12.2. Safety in case of faults 24
12.3. Fuse protection for power supply 24
12.4. Requirements for connection cables 25

12.5. Notes on cable laying 25
12.6. Changing device configuration (using DIP switches) 26
12.6.1. Changing system family (AR/AP switching) 26
12.6.2. Deactivating guard locking monitoring 27
12.6.3. Activating release monitoring 27
12.7. Notes on operation with control systems 28
12.8. Connection of guard locking control 29
12.9. Terminal assignment and contact description 30
12.10. Operation as separate device 31
12.11. Operation in an AR switch chain 32
12.12. Information on operation in an AR switch chain 33
12.12.1. System times 33
12.12.2. Wiring an AR switch chain 33
12.12.3. Number of devices in switch chains 33
12.12.4. Resetting in switch chains 33

13. Commissioning 34
13.1. Teach-in operation (only for MGB unicode) 34
13.2. Mechanical function test 34
13.3. Electrical function test 35

14. Technical data 36
14.1. Radio frequency approvals (for devices with FCC ID and IC on the type label) 37
14.2. Typical system times 38

15. System states 38
15.1. Key to symbols 38
15.2. System status table MGB-AR 39
15.3. System status table MGB-AP 40

16. Troubleshooting and assistance 41
16.1. Fault reset 41
16.2. Help on troubleshooting in the Internet 41
16.3. Help on mounting in the Internet 41
16.4. Application examples 41

17. Service 41

18. Inspection and service 42

19. Declaration of conformity 43

EN

1. About this document

1.1. Scope

These operating instructions are valid for all MGB-L1…-AR.-… / MGB-L2…-AR.-… and MGB-L1…-AP.-… / MGB-L2…-AP.-…. These operating instructions, the document *Safety information* and any enclosed data sheet form the complete user information for your device.

Series	Guard locking types	System families	Product versions
MGB	L1 (guard locking by spring force)	…-AP…	from V3.0.0
		…-AR…	
	L2 (guard locking by solenoid force)	…-AP…	
		…-AR…	

1.1.1. Notes on older product versions

Products with lower product versions or without a version number are not described by these operating instructions. Please contact our support team in this case.

1.2. Target group

Design engineers and installation planners for safety devices on machines, as well as setup and servicing staff possessing special expertise in handling safety components.

1.3. Key to symbols

Symbol/depiction	Meaning
AP	This section applies on operation as MGB-AP
AR	This section applies on operation as MGB-AR
DIP	In this section attention must be paid to the DIP switch settings
	Printed document
www	Document is available for download at www.euchner.com
DANGER WARNING CAUTION	Safety precautions **Danger** of death or severe injuries **Warning** about possible injuries **Caution** Slight injuries possible
NOTICE Important!	**Notice** about possible device damage **Important** information
Tip	Useful information

1.4. Supplementary documents

The overall documentation for this device consists of the following documents:

Document title (document number)	Contents	
Safety information (1123151)	Basic safety information	
Operating Instructions (2119167)	(this document)	
Possibly enclosed data sheet	Item-specific information about deviations or additions	

Important!

Always read all documents to gain a complete overview of safe installation, setup and use of the device. The documents can be downloaded from www.euchner.com. For this purpose enter the doc. no. in the search box.

EN

2. Correct use

The system comprises at least one locking module MGB-L1-…/MGB-L2–… and one handle module MGB-H…

The safety system MGB is an interlocking device with guard locking (type 4). Devices with unicode evaluation possess a high coding level, devices with multicode evaluation possess a low coding level.

The locking module can be configured with the aid of DIP switches. Depending on the setting, the locking module behaves like an AP or AR device (see chapter *2.1. Main differences between MGB-AP and MGB-AR on page 7*). In addition the guard locking monitoring can be switched on or off. More detailed information about the possible settings is available in the chapter *12.6. Changing device configuration (using DIP switches) on page 26*.

DIP

With active guard locking monitoring the following applies:

In combination with a movable guard and the machine control, this safety component prevents the guard from being opened while a dangerous machine function is being performed.

This means:

- Starting commands that cause a dangerous machine function must become active only when the guard is closed and locked.
- The guard locking device must not be unlocked until the dangerous machine function has ended.
- Closing and locking a guard must not cause automatic starting of a dangerous machine function. A separate start command must be issued. For exceptions, refer to EN ISO 12100 or relevant C-standards.

With inactive guard locking monitoring the following applies:

In combination with a movable guard and the machine control, this safety component prevents dangerous machine functions from occurring while the guard is open. A stop command is triggered if the guard is opened during the dangerous machine function. With inactive guard locking monitoring, guard locking must be used only for process protection.

This means:

- Starting commands that cause a dangerous machine function must become active only when the guard is closed.
- Opening the guard triggers a stop command.
- Closing a guard must not cause automatic starting of a dangerous machine function. A separate start command must be issued. For exceptions, refer to EN ISO 12100 or relevant C-standards.

Before the device is used, a risk assessment must be performed on the machine, e.g. in accordance with the following standards:

- EN ISO 13849-1
- EN ISO 12100
- IEC 62061

Correct use includes observing the relevant requirements for installation and operation, particularly based on the following standards:

- EN ISO 13849-1
- EN ISO 14119
- EN 60204-1

The safety system MGB can be combined only with the intended modules in the MGB system family.

On the modification of system components, EUCHNER provides no warranty for function.

AR

Locking modules with the configuration MGB-AR can be integrated into an AR switch chain.

Connection of several devices in an AR switch chain is permitted only using devices intended for series connection in an AR switch chain. Check the operating instructions for the related device.

Important!

- The user is responsible for the proper integration of the device into a safe overall system. For this purpose, the overall system must be validated, e.g. in accordance with EN ISO 13849-2.
- Correct use requires observing the permissible operating parameters (see chapter *14. Technical data on page 36*).
- If a data sheet is included with the product, the information on the data sheet applies.

Table 1: Possible combinations for MGB components

Evaluation unit	Handle module
	MGB-H-… from V2.0.0
MGB…AR/AP from V3.0.0	●

Key to symbols	●	Combination possible

2.1. Main differences between MGB-AP and MGB-AR

System family	Symbol	Use
MGB-AP	AP	Optimized for operation in safe control systems. If series connection is not necessary, the number of terminals required can be reduced using this system family.
MGB-AR	AR	Linking of several guards on one shutdown path. As a consequence several safety doors can be very simply polled using one evaluation unit or two control system inputs.

EN

3. Description of the safety function

Devices from this series feature the following safety functions:

With active guard locking monitoring the following applies:

Monitoring of guard locking and the position of the guard (interlocking device with guard locking according to EN ISO 14119)

- Safety function (see chapter *6. Function on page 10*):
  - The safety outputs are switched off when guard locking is released (monitoring of the locking element).
    Important: This applies only if guard locking monitoring is active!
  - The safety outputs are switched off when the guard is open.
  - Guard locking can be activated only when the bolt tongue is located in the locking module (failsafe locking mechanism).
- Safety characteristics: category, Performance Level, PFH_D (see chapter *14. Technical data on page 36*).

Activation of guard locking

- Safety function.
  If the device is used as guard locking for personnel protection, control of guard locking must be regarded as a safety function.

  The safety level of guard locking control is determined by the device $PFH_{D\ int.}$ and by the external control (e.g. $PFH_{D\ ext.}$ of the standstill monitor).

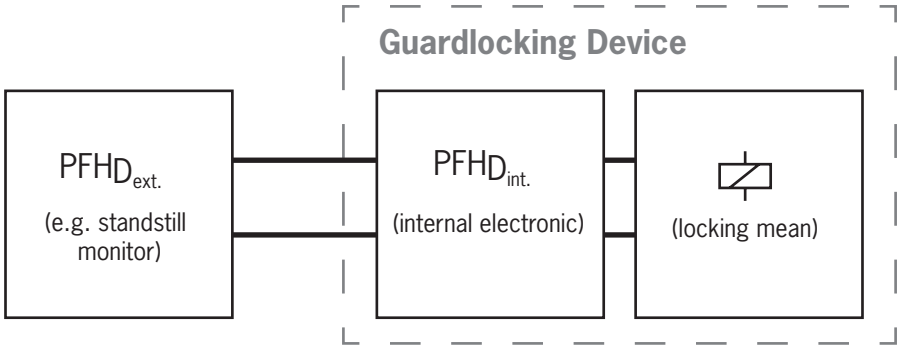

- Safety characteristics: category, Performance Level, PFH_D (see chapter *14. Technical data on page 36*).

With inactive guard locking monitoring the following applies:

Monitoring of the guard position
(interlocking device according to EN ISO 14119)

- Safety function: the safety outputs are switched off when the guard is open (see chapter *6. Function on page 10*).
- Safety characteristics: category, Performance Level, PFH_D (see chapter *14. Technical data on page 36*).

The following applies to devices with emergency stop:

Emergency stop
(emergency stop device according to EN ISO 13850)

- Safety function: emergency stop function
- Safety characteristics: B_{10D} value (see chapter *14. Technical data on page 36*)

4. Exclusion of liability and warranty

In case of failure to comply with the conditions for correct use stated above, or if the safety instructions are not followed, or if any servicing is not performed as required, liability will be excluded and the warranty void.

5. General safety precautions

Safety switches fulfill personnel protection functions. Incorrect installation or tampering can lead to fatal injuries to personnel.

Check the safe function of the guard particularly

- after any setup work
- after the replacement of an MGB component
- after an extended period without use
- after every fault
- after any change to the DIP switch settings

Independent of these checks, the safe function of the guard should be checked at suitable intervals as part of the maintenance schedule.

WARNING

Danger to life due to improper installation or due to bypassing (tampering). Safety components fulfill a personnel protection function.

- Safety components must not be bypassed, turned away, removed or otherwise rendered ineffective. On this topic pay attention in particular to the measures for reducing the possibility of bypassing according to EN ISO 14119:2013, section 7.
- The switching operation is allowed to be triggered only by the intended handle module MGB-H… that is positively fastened to the guard.
- Prevent bypassing by means of replacement actuators (only for multicode evaluation). For this purpose, restrict access to actuators and to keys for releases, for example.
- Mounting, electrical connection and setup only by authorized personnel possessing the following knowledge:
  - specialist knowledge in handling safety components
  - knowledge about the applicable EMC regulations
  - knowledge about the applicable regulations on occupational safety and accident prevention.

Important!

Prior to use, read the operating instructions and keep these in a safe place. Ensure the operating instructions are always available during mounting, setup and servicing. EUCHNER cannot provide any warranty in relation to the readability of the CD for the storage period required. For this reason you should archive a printed copy of the operating instructions. You can download the operating instructions from www.euchner.com.

EN

6. Function

Together with a handle module, the locking module makes it possible to lock movable guards. The combination also serves as a mechanical door stop at the same time.

DIP

The following switch-on condition applies to the safety outputs FO1A and FO1B (also see chapters *15.2. System status table MGB-AR on page 39* and *15.3. System status table MGB-AP on page 40*):

Configuration	System family	MGB-AR		MGB-AP	
	Guard locking monitoring	active	inactive	active	inactive
Condition	No fault in the device	TRUE	TRUE	TRUE	TRUE
	Guard closed	TRUE	TRUE	TRUE	TRUE
	Bolt tongue inserted in locking module	TRUE	TRUE	TRUE	TRUE
	Guard locking active	TRUE	Not relevant	TRUE	Not relevant
	In case of series connection: Signal available from the upstream switch on the safety inputs FI1A and FI1B **In case of separate operation:** DC 24 V present at the safety inputs FI1A and FI1B	TRUE	TRUE	Not relevant	Not relevant
		FO1A and FO1B are **ON**			

The locking module detects the position of the guard and the position of the bolt tongue. The position of the guard locking is also monitored.

Guard locking monitoring can be deactivated using DIP switches (see chapter *12.6. Changing device configuration (using DIP switches) on page 26*).

Important!

For use as guard locking for personnel protection in accordance with EN ISO 14119, guard locking monitoring must be active.

The bolt tongue in the handle module is moved into and out of the locking module by actuating the door handle.

When the bolt tongue is fully inserted in the locking module, the locking arm locks the bolt tongue in this position. Depending on the version, this locking is by spring force or solenoid force.

6.1. Guard locking for version MGB-L1

(Guard locking actuated by spring force and released by power-ON)

Activating guard locking: close guard; no voltage at the solenoid.

Releasing guard locking: apply voltage to the solenoid.

The spring-operated guard locking functions in accordance with the closed-circuit current principle. If the voltage is interrupted at the solenoid, the guard locking remains active and the guard cannot be opened directly.

Important!

If the guard is open when the power supply is interrupted and is then closed, guard locking is activated. This can lead to persons being locked in unintentionally.

As long as the locking arm is closed, the bolt tongue cannot be pulled out of the locking module and the guard is locked.

When voltage is applied to the guard locking solenoid, the locking arm is opened and bolt tongue is released. The guard can be opened.

6.2. Guard locking for version MGB-L2

(Guard locking actuated by power-ON and released by spring force)

ⓘ	**Important!** Use as guard locking for personnel protection is possible only in special cases, after strict assessment of the accident risk (see EN ISO 14119:2013, section 5.7.1)!

Activating guard locking: apply voltage to the solenoid.

Releasing guard locking: disconnect voltage from the solenoid.

The magnetically actuated guard locking operates in accordance with the open-circuit current principle. If the voltage is interrupted at the solenoid, the guard locking is released and the guard can be opened directly!

The guard can be opened as long as no voltage is applied to the guard locking solenoid.

When voltage is present at the guard locking solenoid, the locking arm is held in locked position and the guard is locked.

EN

7. System overview

7.1. Locking module MGB-L.-…

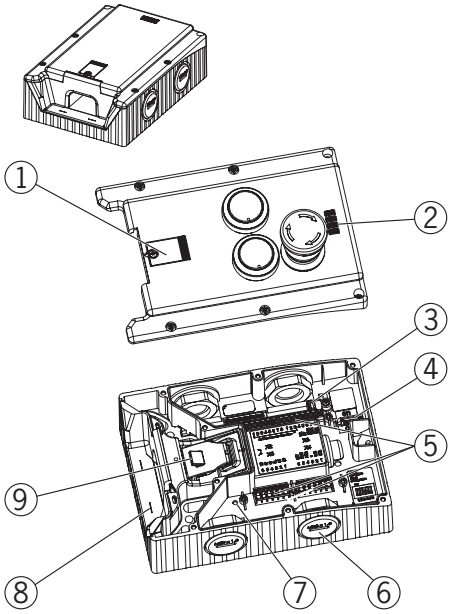

Figure 1: Locking module MGB-L.–…

Key:

①	Cover for auxiliary release
②	LED indicator
③	Jumper
④	DIP switches
⑤	Terminals X2 -X5
⑥	Depending on version: Cable entry M20x1.5 or plug connector
⑦	Internal reset
⑧	Auxiliary marking for maximum permitted mounting distance
⑨	Locking arm

Notice:
Depending on the version, additional controls and indicators may be integrated into the cover and a mounting plate can be included.
See enclosed data sheet.

7.2. Handle module MGB-H-…

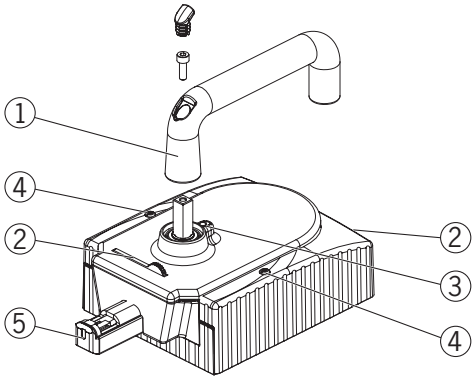

Figure 2: Handle module MGB-H-…

Key:
① Door handle
② Fold-out lockout mechanism
(optional: second, automatically extending lockout mechanism)
③ Locking pin for handle adjustment
④ Locking screws T10 for housing cover
⑤ Bolt tongue

Notice:
Depending on the version, a mounting plate can be included.
See enclosed data sheet.

7.3. Escape release MGB-E-… (optional)

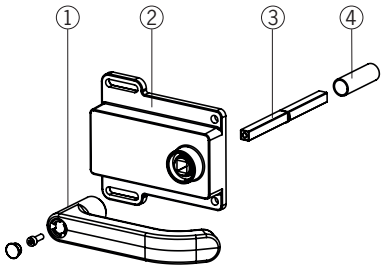

Figure 3: Escape release MGB-E-…

Key:
① Door handle
② Cover
③ Actuation axis 8 x 8 mm
(different lengths available)
④ Protective sleeve

Notice:
Depending on the version, a mounting plate can be included.
See enclosed data sheet.

7.4. Dimension drawing

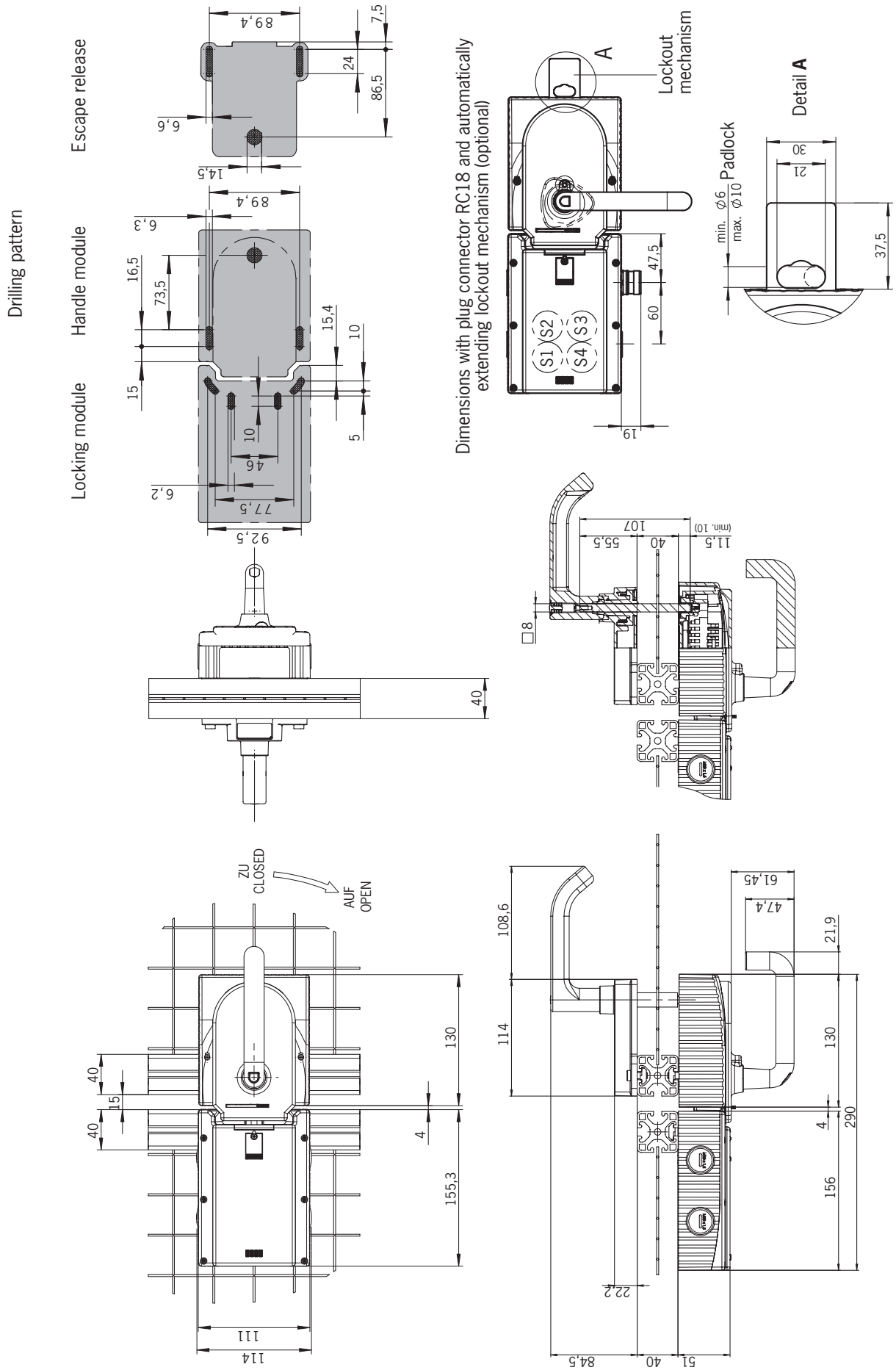

Figure 4: Dimension drawing MGB fitted, without optional mounting plates

EN

8. Manual release

Some situations require the guard locking to be released manually (e.g. malfunctions or an emergency). A function test should be performed after release.

More information on this topic can be found in the standard EN ISO 14119:2013, section 5.7.5.1. The device can feature the following release functions:

8.1. Auxiliary release

In the event of service, the guard locking can be released with the auxiliary release irrespective of the state of the solenoid (see *Figure 5*).

DIP

- When release monitoring is active, the system enters into a latching fault when the auxiliary release is actuated. See *System status table*, *signal sequence incorrect* status (DIA red, Lock flashes 1 time).
- The system might not enter into a latching fault if the auxiliary release is actuated very slowly.

Important!

- The auxiliary release must be reset at the control system level, e.g. by means of a plausibility check (status of the safety outputs does not match the guard locking activation signal). See EN ISO 14119:2013, sec. 5.7.5.4.
- The auxiliary release is not a safety function.
- The machine manufacturer must select and use a suitable release (escape release, emergency unlocking, etc.) for a specific application. A risk assessment is required for this purpose. It may be necessary to take specifications from a product standard into account.
- The correct function must be checked at regular intervals.
- Loss of the release function due to mounting errors or damage during mounting. Check the release function every time after mounting.
- Please observe the notes on any enclosed data sheets.

The locking screw must be screwed back in and sealed (for example with sealing lacquer) after assembly and after every use of the auxiliary release. Tightening torque 0.5 Nm.

1. Undo locking screw.
2. Lift locking arm using a screwdriver and actuate door handle.

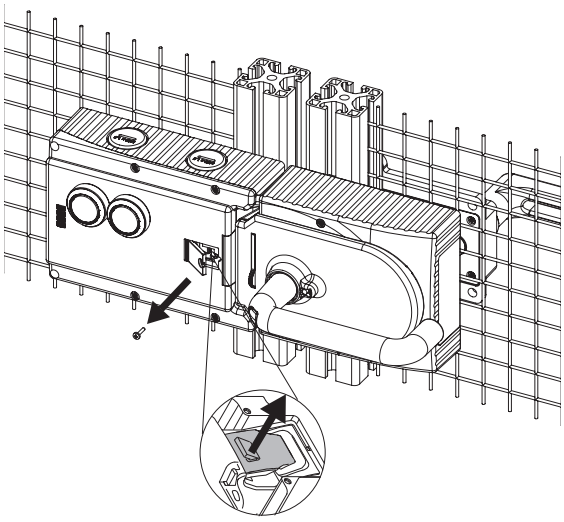

Figure 5: Auxiliary release

8.2. Emergency unlocking (can be retrofitted)

Permits opening of a locked guard from outside the danger area without tools. For mounting, see the mounting supplement.

Important!

- It must be possible to operate the emergency unlocking manually from outside the protected area without tools.
- The emergency unlocking must possess a marking indicating that it may be used only in an emergency.
- The actuator must not be under tensile stress during manual release.
- The unlocking function meets all other requirements from EN ISO 14119.
- The emergency unlocking meets the requirements of Category B according to EN ISO 13849-1:2008.
- Loss of the release function due to mounting errors or damage during mounting.
- Check the release function every time after mounting.
- Please observe the notes on any enclosed data sheets.

8.2.1. Actuating emergency unlocking

- Press emergency unlocking and turn clockwise by 90° until it clicks into place.

➡ Guard locking is released.

To reset, press the snap-in bolt inward using a small screwdriver or similar tool and turn the emergency unlocking back. The emergency unlocking must be sealed in the free position.

The safety outputs are switched off when the emergency unlocking is actuated. Use the safety outputs to generate a stop command.

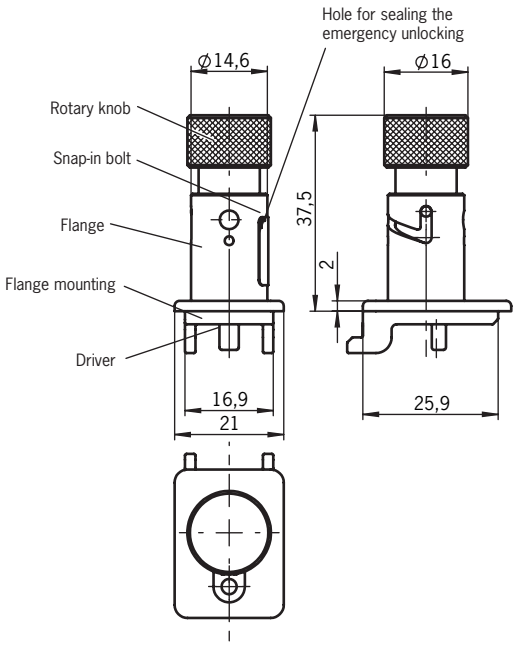

8.3. Lockout mechanism

If the lockout mechanism is pivoted out/extended, the bolt tongue cannot be extended. The lockout mechanism can be secured with padlocks (see *Figure 6*).

➡ To pivot out, press the grooved part (possible only with bolt tongue retracted).

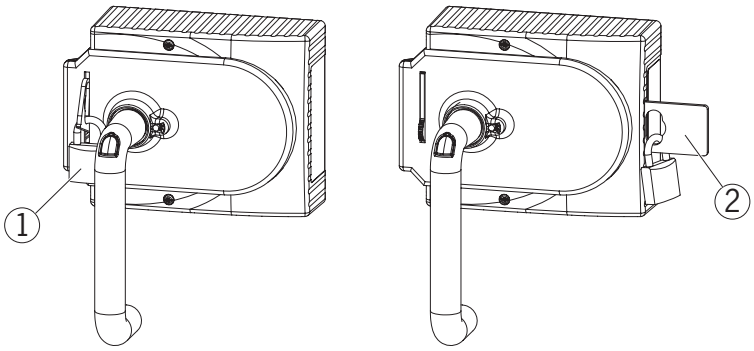

Key:
① Padlock ∅ min. 2 mm, ∅ max. 10 mm
Notice:
You can fit a maximum of 3 locks Ø 8 mm.

② Automatically extending, second lockout mechanism
Padlock ∅ min. 6 mm, ∅ max. 10 mm

Figure 6: Lockout mechanism secured with padlock

EN

8.4. Escape release (optional)

The escape release is used to open a locked guard from the inside without tools.

DIP

When release monitoring is active, the system enters into a latching fault when the escape release is actuated.
See *System status table*, *signal sequence incorrect* status (DIA red, Lock flashes 1 time).
The system might not enter into a latching fault if the escape release is actuated very slowly.

Important!

- It must be possible to actuate the escape release manually from inside the protected area without tools.
- It must not be possible to reach the escape release from the outside.
- The actuator must not be under tensile stress during manual release.
- The escape release meets the requirements of Category B according to EN ISO 13849-1:2008.

- Fit escape release such that operation, inspection and maintenance are possible.
- The actuation axis for the escape release must be inserted min. 10 mm into the handle module. Note the information on the different profile widths in the next chapter.
- Align escape release axis at right angles to the handle module. See *Figure 4* and *Figure 8*.

8.4.1. Preparing escape release

(also see *Figure 7: Preparing escape release on page 17*)

Profile width	Length required for actuation axis		Which EUCHNER parts are required?	Necessary work steps
	Without plates	With mounting plates (4 mm each)		
D	D+13	D+21		
30 mm	43 mm	51 mm	Standard escape release with 110 mm axis (order no. 100465)	Shorten to required length
40 mm	53 mm	61 mm	Standard escape release with 110 mm axis (order no. 100465) If necessary, extended actuation axis (order no. 106761)	*Without mounting plates:* None *With mounting plates:* Use long actuation axis and protective sleeve and shorten to required length
45 mm	58 mm	66 mm	Standard escape release with 110 mm axis (order no. 100465) **and** extended actuation axis (order no. 106761)	Use long actuation axis and protective sleeve and shorten to required length
50 mm	63 mm	71 mm	Standard escape release with 110 mm axis (order no. 100465) **and** extended actuation axis (order no. 106761)	Use long actuation axis and protective sleeve and shorten to required length

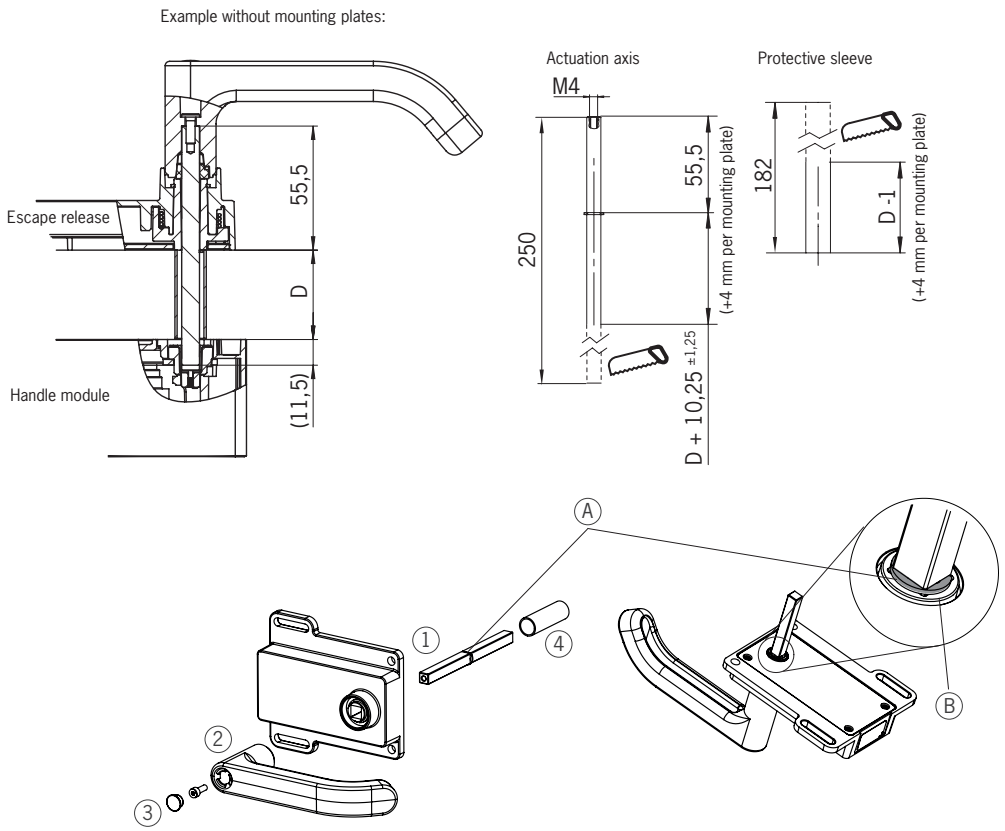

① Insert actuation axis. The snap ring **A** must be in contact with the escape release **B**.
② Fit door handle.
③ Tighten fixing screw to 2 Nm and press in cap.
④ Fit protective sleeve.

Figure 7: Preparing escape release

EN

9. Installation

WARNING

Mounting must be performed only by authorized personnel.

With two-leaf hinged doors, one of the two door leaves must also be latched mechanically.

Use a rod latch (Item) or a double-door lock (Bosch Rexroth) for this purpose, for example.

Important!

- If installed flush, the switching distance changes as a function of the installation depth and the guard material.

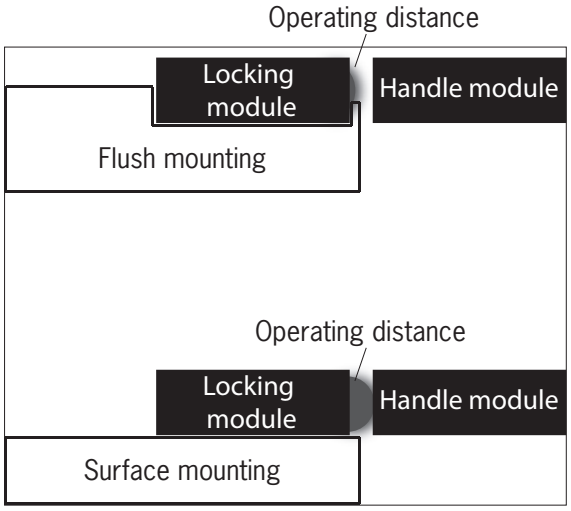

Tip!

- You will find an animation on the mounting process at www.euchner.com.
- The color and labeling of pushbuttons and indicators can be modified.

For mounting steps , see *Figure 8* and *Figure 9* to *Figure 14*.

Attach system such that operation of the auxiliary release as well as inspection and maintenance are possible.

The locking screw of the auxiliary release must be returned to its original position and sealed before putting into operation (for example with sealing lacquer).

9.1. Mounting lens

Installation

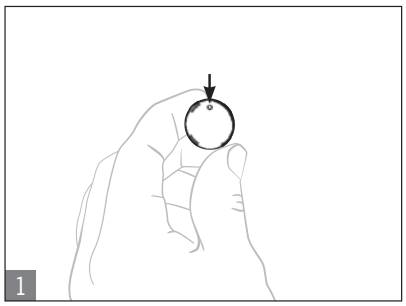

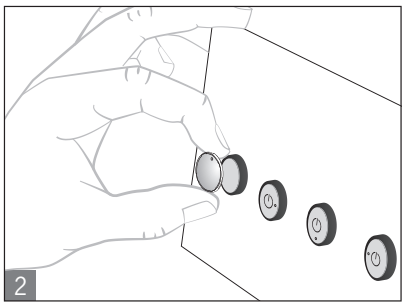

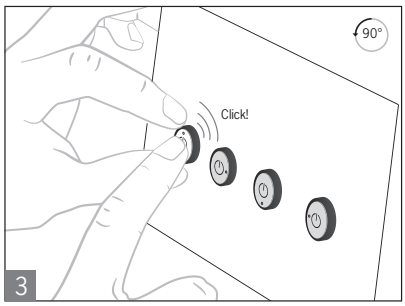

Removal

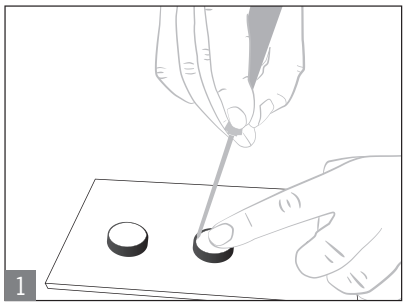

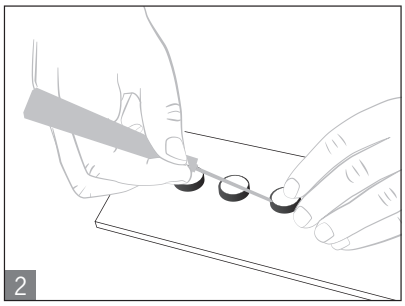

Lens

EN

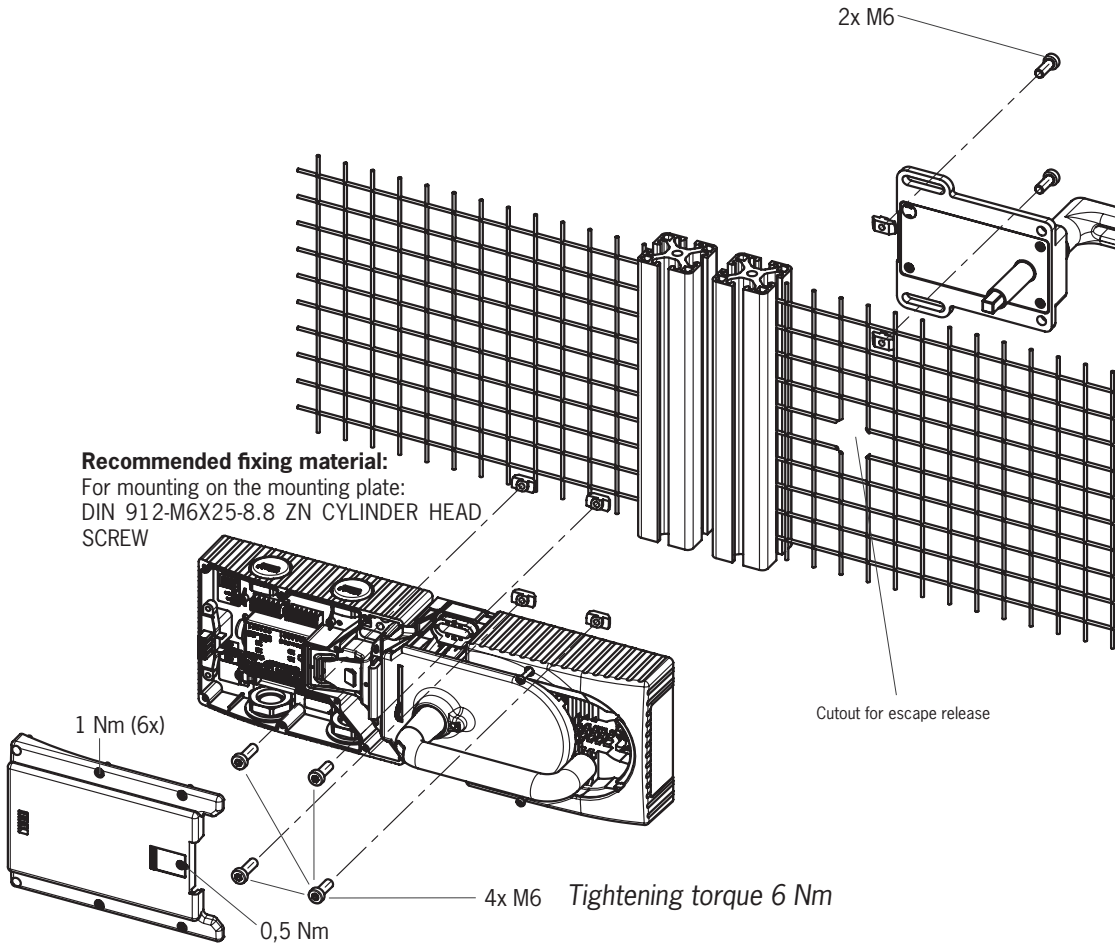

Empfohlenes Befestigungsmaterial:
Für die Befestigung auf der Montageplatte:
DIN 912-M6X25-8.8 ZN ZYLINDERSCHRAUBE

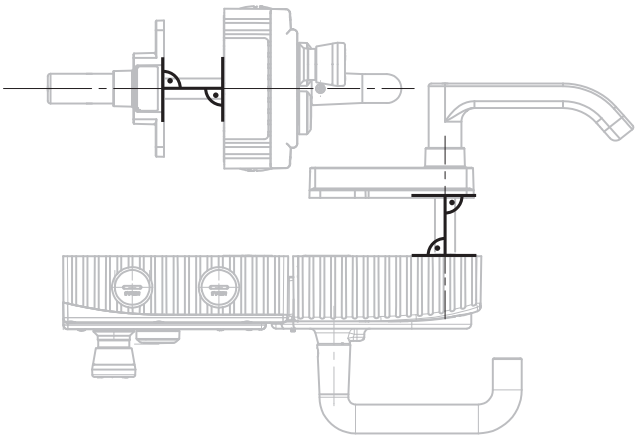

Figure 8: Installation example for door hinged on the right (general view)

10. Changing actuating direction (here: from right to left)

ⓘ	**Important!** It is possible to make this change only when the bolt tongue is not extended and an escape release is not yet mounted.

As supplied, the handle module is set either for doors hinged on the right or for doors hinged on the left.

Based on the example of a handle module for doors hinged on the right this means:

- The guard opens by pressing down the door handle.
- The system is mounted the other way around for doors hinged on the left. In other words, the guard opens by pressing up the door handle (see *Figure 9*). For this reason the actuating direction of the door handle must be changed (see *Figure 9* to *Figure 14*).

(Similarly on handle modules for doors hinged on the left)

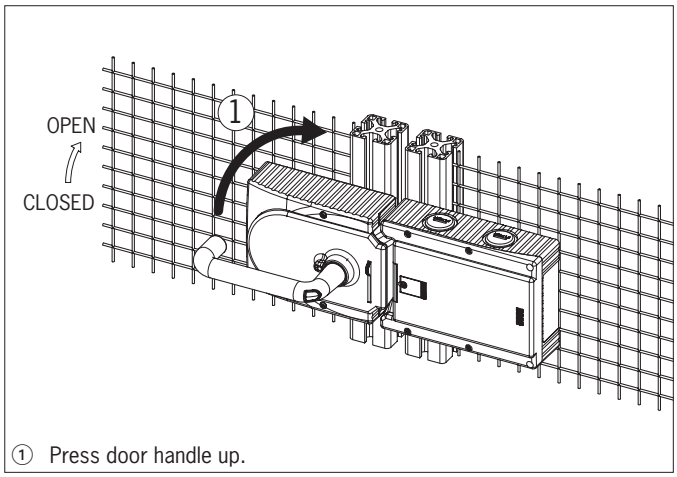

① Press door handle up.

Figure 9: Changing actuating direction, step ①

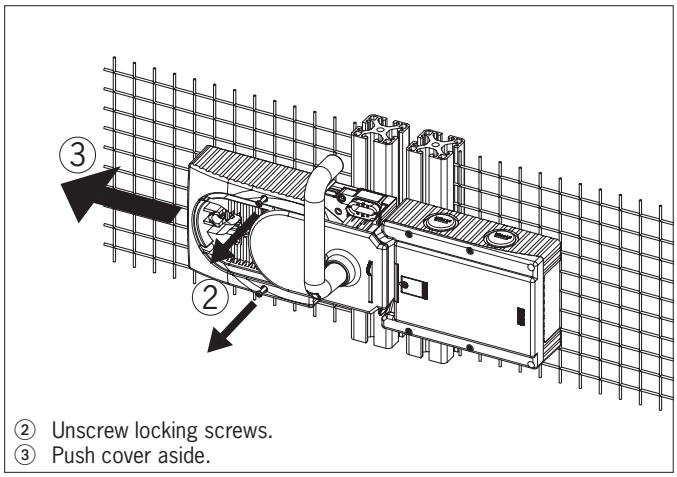

② Unscrew locking screws.
③ Push cover aside.

Figure 10: Changing actuating direction, steps ② and ③

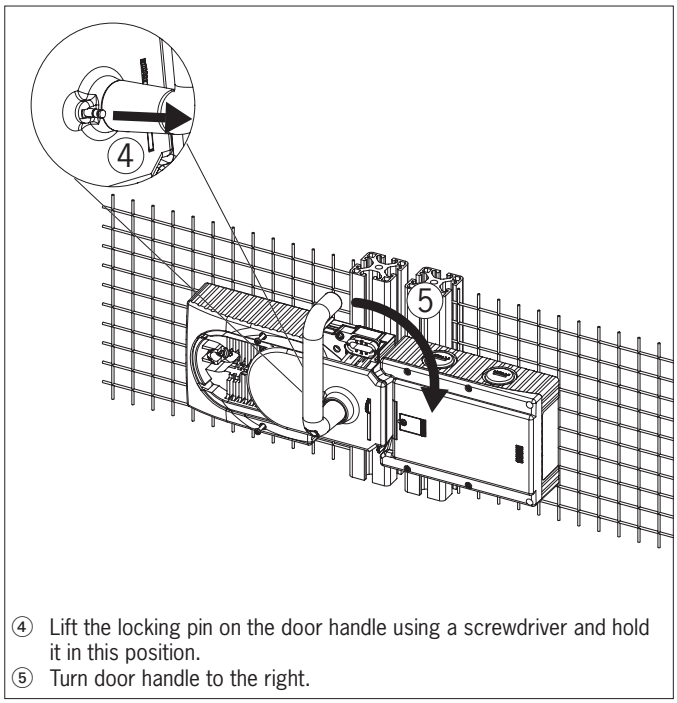

④ Lift the locking pin on the door handle using a screwdriver and hold it in this position.
⑤ Turn door handle to the right.

Figure 11: Changing actuating direction, steps ④ and ⑤

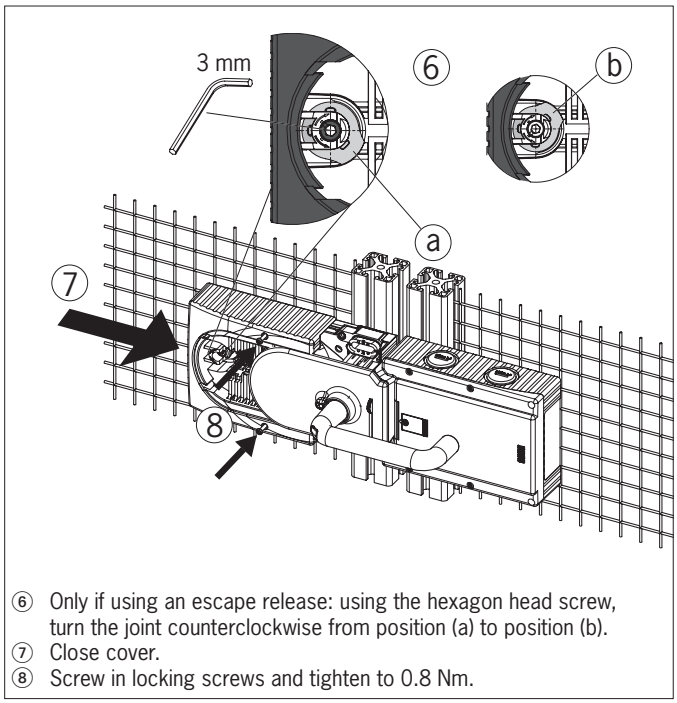

⑥ Only if using an escape release: using the hexagon head screw, turn the joint counterclockwise from position (a) to position (b).
⑦ Close cover.
⑧ Screw in locking screws and tighten to 0.8 Nm.

Figure 12: Changing actuating direction, steps ⑥ to ⑧

EN

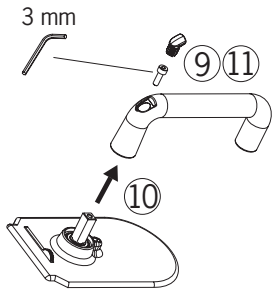

⑨ Remove cover and undo hexagon socket screw.
⑩ Reposition the door handle by 90° in clockwise direction and fasten it again.
⑪ Tighten hexagon socket screw to 3 Nm

Figure 13: Changing actuating direction, steps ⑨ and ⑪

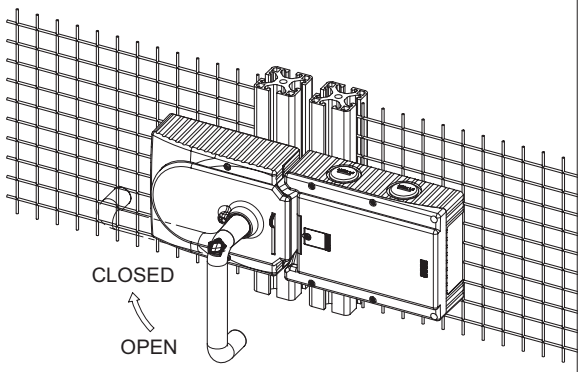

⑫ State after repositioning

Figure 14: Changing actuating direction, final state

11. Protection against environmental effects

Lasting and correct safety function requires that the system must be protected against foreign bodies such as swarf, sand, blasting shot, etc., which can become lodged in the locking and handle modules. For this purpose a suitable installation position should be selected.

Cover device during painting work!

12. Electrical connection

WARNING

If there is a mistake, loss of the safety function due to incorrect connection.

- To ensure safety, both safety outputs (FO1A and FO1B) must always be evaluated.
- The monitoring outputs must not be used as safety outputs.
- Lay the connection cables with protection to prevent the risk of short circuits.

CAUTION

Risk of damage to equipment or malfunctions as a result of incorrect connection.

- The inputs on an evaluation unit connected must be positive-switching, as the two outputs on the safety switch deliver a level of +24 V in the switched-on state.
- All the electrical connections must either be isolated from the mains supply by a safety transformer according EN IEC 61558-2-6 with limited output voltage in the event of a fault, or by other equivalent isolation measures.
- All electrical outputs must have an adequate protective circuit for inductive loads. The outputs must be protected with a free-wheeling diode for this purpose. RC interference suppression units must not be used.
- Power devices which are a powerful source of interference must be installed in a separate location away from the input and output circuits for signal processing. The cable routing for safety circuits should be as far away as possible from the cables of the power circuits.
- To prevent EMC problems, it is imperative you follow the chapter *12.5. Notes on cable laying on page 25*. Follow EMC notes on devices in the immediate vicinity of the MGB system and their cables.
- In order to avoid EMC interference, the physical environmental and operating conditions at the installation site of the device must comply with the requirements according to the standard DIN EN 60204-1:2006, section 4.4.2/EMC.

Important!

- If the device does not appear to function when the operating voltage is applied (e.g. green Power LED does not illuminate), the safety switch must be returned to the manufacturer.
- To ensure the stated degree of protection is achieved, the cover screws must be tightened to a tightening torque of 1 Nm.
- Tighten screw for the cover for the auxiliary release to 0.5 Nm.

EN

12.1. Notes about c UL us

Important!

- For use and operation as per the c UL us requirements [1], a power supply with the feature *for use in class 2 circuits* must be used. The same requirement applies to the safety outputs.
  Alternative solutions must comply with the following requirements:
  a) Electrically isolated power supply unit with a max. open-circuit voltage of 30 V/DC and a limited current of max. 8 A.
  b) Electrically isolated power supply unit in combination with fuse as per UL248. This fuse should be designed for max. 3.3 A and should be integrated into the 30 V DC voltage section.
- The mounting of conduits directly on the MGB is not allowed. Cables are allowed to be connected only via suitable cable glands. For this purpose use EUCHNER cable gland of type EKPM20/06U. Equivalent cable glands can be used if they are UL-listed (QCRV) and are suitable for the related cable diameter (22 AWG – 17 AWG).

1) Note on the scope of the UL approval: Only for applications as per NFPA 79 (Industrial Machinery).
The devices have been tested as per the requirements of UL508 (protection against electric shock and fire).

12.2. Safety in case of faults

- The operating voltage UB is reverse polarity protected.
- The safety outputs FO1A/FO1B are short circuit-proof.
- A short circuit between FI1A and FI1B or FO1A and FO1B is detected by the device.
- A short circuit in the cable can be excluded by laying the cable with protection.

12.3. Fuse protection for power supply

The power supply must be provided with fuse protection depending on the number of devices and current required for the outputs. The following rules apply:

Max. current consumption of an individual device I_{max}

I_{max} = $I_{UB} + I_{UA} + I_{FO1A+FO1B}$

I_{UB} = Device operating current (80 mA)

I_{UA} = Load current of monitoring outputs OD, OT, OL and OI (4 x max. 50 mA) + solenoid + switches

$I_{FO1A+FO1B}$ = Load current of safety outputs FO1A + FO1B (2 x max. 200 mA)

AR

Max. current consumption of a switch chain ΣI_{max}

$\Sigma I_{max} = I_{FO1A+FO1B} + n \times (I_{UB} + I_{UA})$

n = Number of connected devices

Current assignment to the fuses

Current	Fuse circuit F1	Fuse circuit F2
I_{UB}	80 mA	
$I_{FO1A+FO1B}$	(2 x max. 200 mA)	
I_{UA}		$I_{solenoid}$ = 375 mA $I_{OD,OT,OL,OI}$ = (4 x max. 50 mA) $I_{switches}$ = max. 100 mA (per switch) $I_{indicators}$ = max. 5 mA (per indicator)

12.4. Requirements for connection cables

CAUTION

Risk of damage to equipment or malfunctions as a result of incorrect connection cables.

- On the usage of other connection components, the requirements in the following table apply. EUCHNER provides no warranty for safe function in case of failure to comply with these requirements.

Observe the following requirements with respect to the connection cables:

Parameter	Value	Unit
Conductor cross-section, min.	0.13	mm²
R max.	60	Ω/km
C max.	120	nF/km
L max.	0.65	mH/km

12.5. Notes on cable laying

Lay all MGB connection cables in a common cable harness.

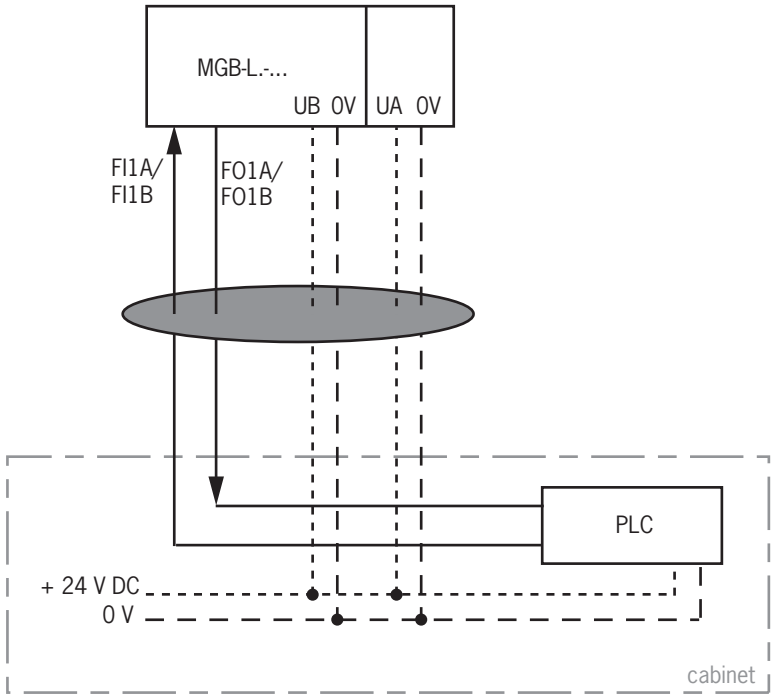

Important: lay cables in a common harness

Figure 15: Stipulated cable laying

EN

12.6. Changing device configuration (using DIP switches)

Tip!

You will find an animation on device configuration at www.euchner.com.

DIP switches

The devices can be configured using the DIP switches. The following settings are possible:

- Changing system family (AR/AP switching)
- Deactivating guard locking monitoring
- Activating release monitoring (possible only with active guard locking monitoring)

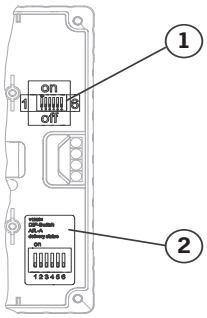

Position of the switches

Item	Description
1	DIP switches
2	Sticker with factory setting

Function of the switches

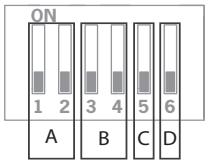

Detail	Switch	Function
A	1+2	On: Device is operated as AP system
		Off: Device is operated as AR system
B	3+4	On: Guard locking monitoring is deactivated
		Off: Guard locking monitoring is active (usually factory setting)
C	5	On: Configuration possible
		Off: Configuration inhibited (factory setting)
D	6	On: Release monitoring is activated
		Off: Release monitoring is deactivated (usually factory setting)

12.6.1. Changing system family (AR/AP switching)

CAUTION

Malfunction due to incorrect configuration or incorrect connection.

- Note that the terminal assignment also changes on changing the configuration (see chapter *12.9. Terminal assignment and contact description on page 30*).

1. Switch off power supply.
2. Set DIP switches 1, 2 and 5 as shown.

For changing from AR => AP	For changing from AP => AR
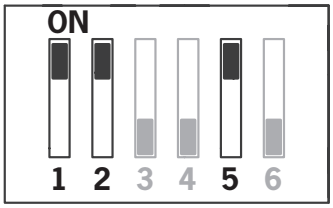	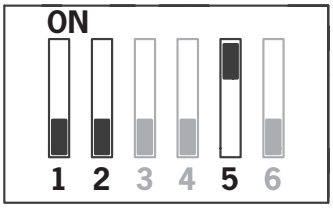

3. Switch on power supply for 5 s.

➡ The change is confirmed by the illumination of the Power LED. All other LEDs are off.

4. Switch off power supply and set DIP switch 5 to OFF.

➡ The next time the device is started, it operates in the operating mode set.

12.6.2. Deactivating guard locking monitoring

WARNING

Risk of injury due to inactive guard locking monitoring.

- When guard locking monitoring is inactive, the guard locking position does not influence the safety outputs. The guard can be opened immediately. This setting is not allowed to be used in applications in which, e.g., there is hazard due to overrunning machinery movement. With inactive guard locking monitoring, guard locking must be used only for process protection.

1. Switch off power supply.
2. Set DIP switches 3-5 as shown.

Deactivating guard locking monitoring	Activating guard locking monitoring
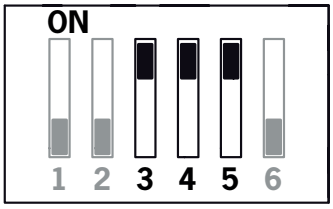	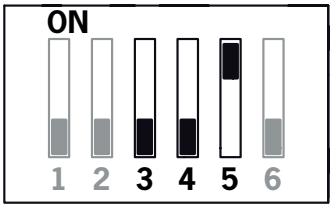

3. Switch on power supply for 5 s.
➡ The change is confirmed by the illumination of the Power LED. All other LEDs are off.
4. Switch off power supply and set DIP switch 5 to OFF.
➡ The next time the device is started, it operates in the operating mode set.

12.6.3. Activating release monitoring

Important!

Release monitoring can be activated only if guard locking monitoring is also active.

NOTICE

When release monitoring is active, the system enters into a latching fault when the escape release or auxiliary release is actuated.

See *System status table*, *signal sequence incorrect* status (DIA red, Lock flashes 1 time).

1. Switch off power supply.
2. Set DIP switches 5 and 6 as shown.

Deactivating release monitoring	Activating release monitoring
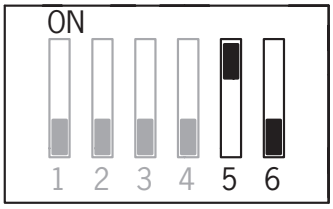	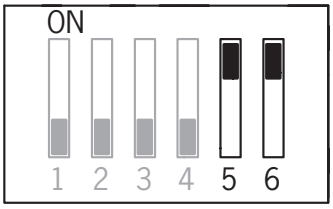

3. Switch on power supply for 5 s.
➡ The change is confirmed by the illumination of the Power LED. All other LEDs are off.
4. Switch off power supply and set DIP switch 5 to OFF.
➡ The next time the device is started, it operates in the operating mode set.

EN

12.7. Notes on operation with control systems

Please observe the following requirements for connection to safe control systems:

General notes

- Use a common power supply for the control system and the connected safety switches.
- A pulsed power supply must not be used for UB/UA. Tap the supply voltage directly from the power supply unit. If the supply voltage is connected to a terminal of a safe control system, this output must provide sufficient electrical current.
- The safety outputs (FO1A and FO1B) can be connected to the safe inputs of a control system. Prerequisite: the input must be suitable for pulsed safety signals (OSSD signals, e.g. from light grids). The control system must tolerate test pulses on the input signals. This normally can be set up by parameter assignment in the control system. Observe the notes of the control system manufacturer. For the pulse duration of your safety switch, please refer to chapter *14. Technical data on page 36*.
- The inputs on an evaluation unit connected must be positive-switching, as the two outputs on the safety switch deliver a level of +24 V in the switched-on state.

AR

- Always connect inputs FI1A and FI1B directly to a power supply unit or to outputs FO1A and FO1B of another EUCHNER AR device (series connection). Pulsed signals must not be present at inputs FI1A and FI1B.
  The test pulses are also present when the safety outputs are switched off (only on FO1A). Depending on the inertia of the downstream device (control system, relay, etc.), this can lead to short switching processes.

Guard locking control

- Test pulses up to max. 5 ms in duration at intervals of min. 100 ms are tolerated on IMP1, IMP2 and IMM.

The inputs on an evaluation unit connected must be positive-switching, as the two outputs on the safety switch deliver a level of +24 V in the switched-on state.

ⓘ	**NOTICE** Due to the fact that short circuit monitoring of the safety outputs FO1A/FO1B is performed by the device itself, the Performance Level in accordance with EN 13849 is not reduced if the control system pulsing is switched off.

ⓘ	**Tip!** A detailed example of connecting and setting the parameters of the control system is available for many devices at www.euchner.com in the area *Downloads/Applications/MGB*. The features of the respective device are dealt with there in greater detail.

12.8. Connection of guard locking control

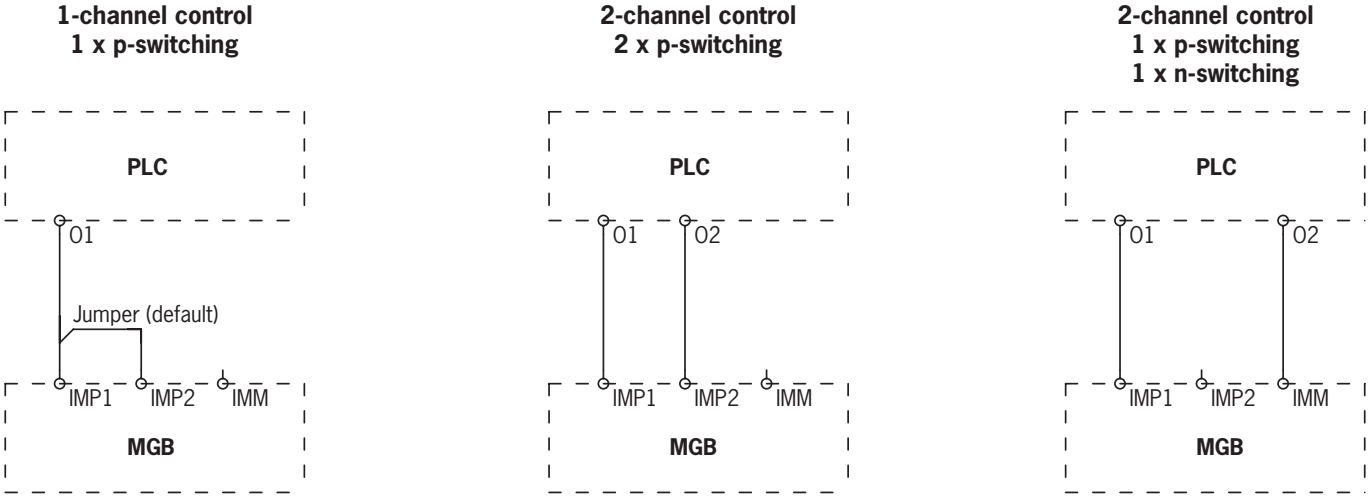

Figure 16: Connection options for guard locking control

With 2-channel control, the jumper between IMP1 and IMP2 must be removed. Connection as shown above. Further adaptations may be required for some device versions with plug connector M23 (RC18) (see data sheet).

EN

12.9. Terminal assignment and contact description

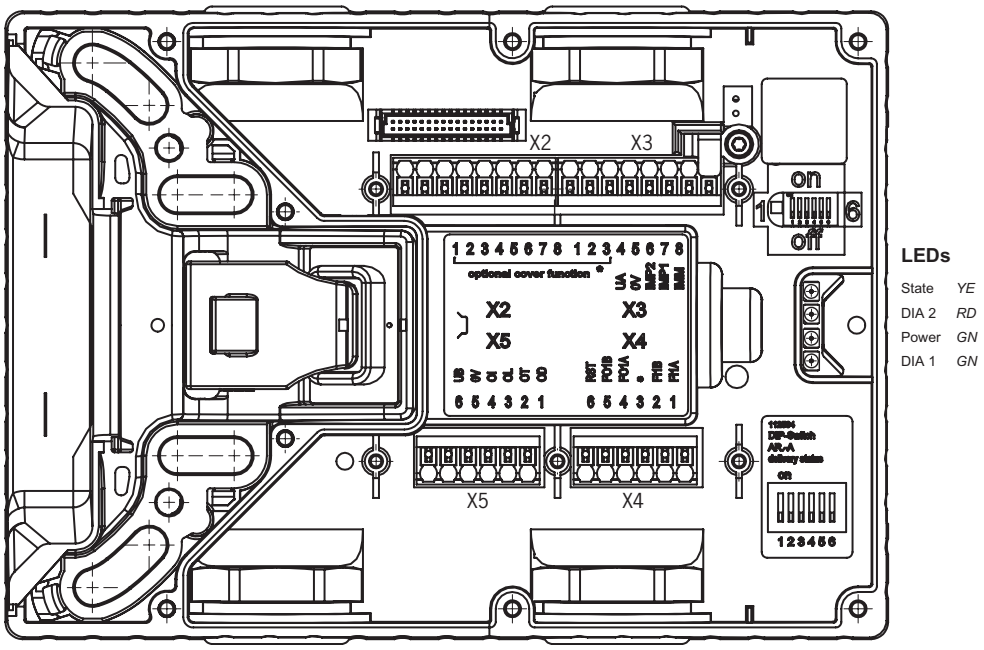

Figure 17: Connections and LEDs

Terminal	Designation	Description	
X3.1 to X3.3	-	See the enclosed data sheet	
X3.4	UA	Power supply for the guard locking solenoid, monitoring outputs and cover assembly, DC 24 V, must be present continuously so that the guard locking solenoid functions.	
X3.5	0V	Ground, DC 0 V (connected internally to X5.5).	
X3.6	IMP2	Control voltage for switching the guard locking on and off, DC 24 V (see chapter *12.8. Connection of guard locking control on page 29*).	IMP1/IMP2 are usually bridged (jumper) as the default setting on delivery
X3.7	IMP1	Control voltage for switching the guard locking on and off, DC 24 V (see chapter *12.8. Connection of guard locking control on page 29*).	
X3.8	IMM	Control voltage for switching the guard locking on and off, 0 V (see chapter *12.8. Connection of guard locking control on page 29*).	
X4.1	FI1A	***In case of AR configuration:*** Enable input for channel A, connect to DC 24 V in separate operation. In case of switch chains, connect output signal FO1A from previous device. ***In case of AP configuration:*** Input is not evaluated.	
X4.2	FI1B	***In case of AR configuration:*** Enable input for channel B, connect to DC 24 V in separate operation. In case of switch chains, connect output signal FO1B from previous device. ***In case of AP configuration:*** Input is not evaluated.	
X4.3	-	See the enclosed data sheet	
X4.4	FO1A	Safety output channel A (function dependent on DIP switch setting) ***Guard locking monitoring active:*** ON when door is closed and locked. ***Guard locking monitoring inactive:*** ON when door is closed and bolt tongue is inserted.	
X4.5	FO1B	Safety output channel B (function dependent on DIP switch setting) ***Guard locking monitoring active:*** ON when door is closed and locked. ***Guard locking monitoring inactive:*** ON when door is closed and bolt tongue is inserted.	
X4.6	RST	Reset input, device is reset if DC 24 V is applied to RST for at least 3 s.	
X5.1	OD	Door monitoring output, ON when the door is closed.	
X5.2	OT	Bolt tongue monitoring output, ON when the door is closed and the bolt tongue is inserted in the locking module.	
X5.3	OL	Guard locking monitoring output, ON when the door is closed and locked.	
X5.4	OI	Diagnostics monitoring output, ON when the device is in the fault state.	
X5.5	0V	Ground, DC 0 V (connected internally to X3.5).	
X5.6	UB	Power supply, DC 24 V	
X2.1 to X2.8	-	See the enclosed data sheet	
X1	-	Reserved for connection of the cover circuit board (only for populated covers)	

Table 2: Terminal assignment and contact description

12.10. Operation as separate device

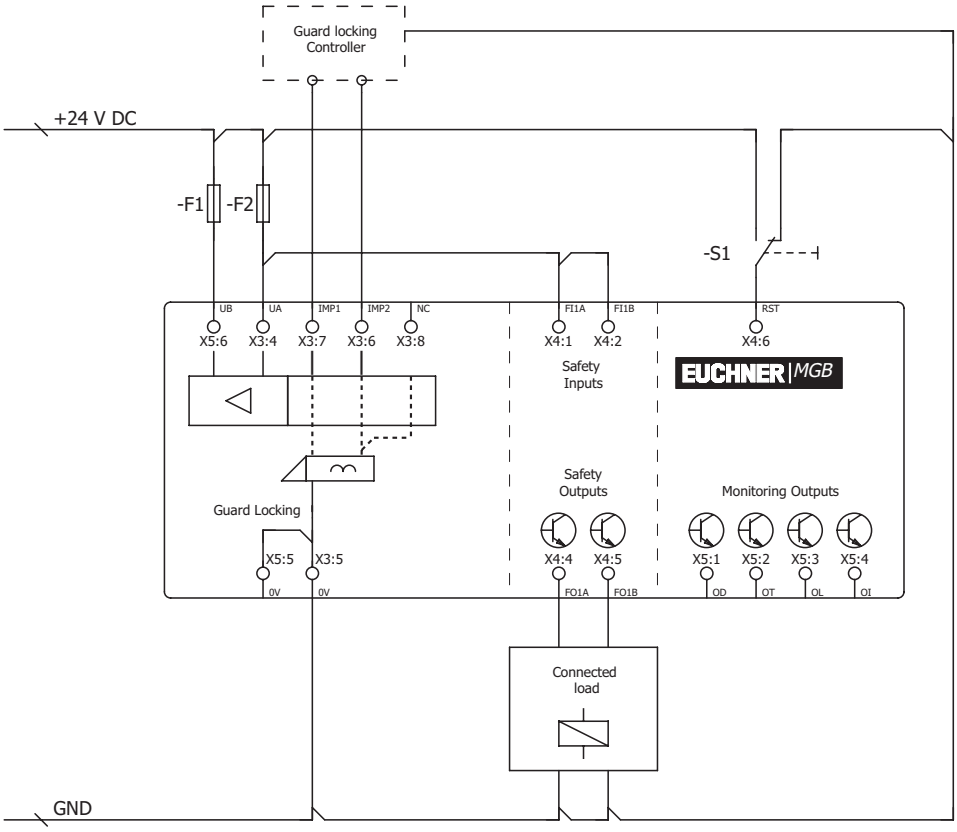

Figure 18: Connection example for separate operation

The switches can be reset via the RST input. To do this, a voltage of 24 V is applied to the RST input for at least 3 seconds. The supply voltage to the switches is interrupted during this time. The RST input must be connected to 0 V if it is not used.

EN

12.11. Operation in an AR switch chain

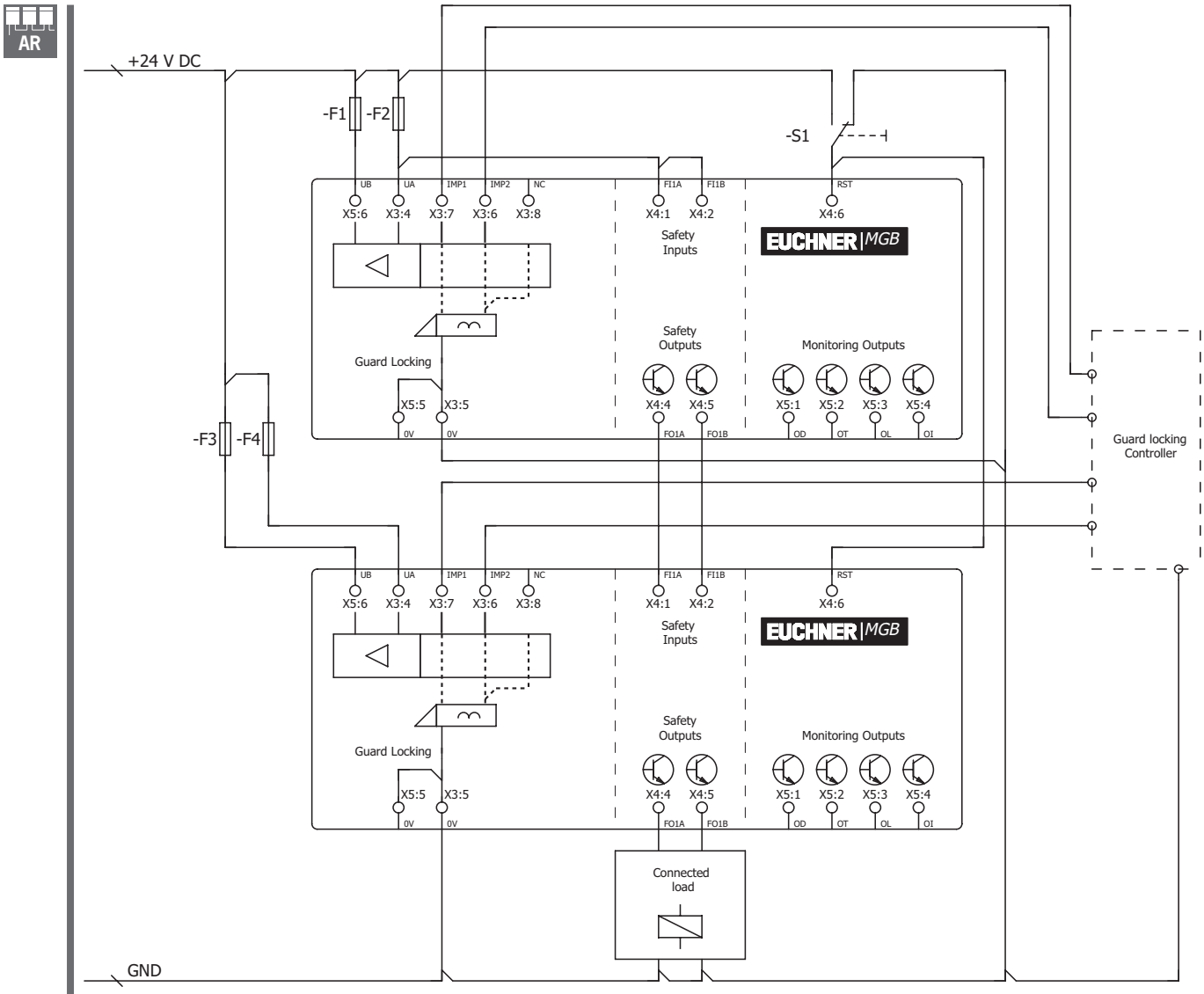

Figure 19: Connection examples for operation in a CES-AR switch chain

For detailed information on operation in an AR switch chain, see the related CES-AR operating instructions. The locking module MGB-L1-AR-…/MGB-L2-AR-… behaves in the switch chain in practice like a safety switch CES-AR. The differences to the CES-AR are described in the following.

12.12. Information on operation in an AR switch chain

AR

12.12.1. System times

The locking module has longer reaction times than a CES-AR switch (see chapters *14. Technical data on page 36* and *14.1. Typical system times on page 38*).

12.12.2. Wiring an AR switch chain

To prevent earth loops, the wiring should be in a star configuration (see *Figure 20*).

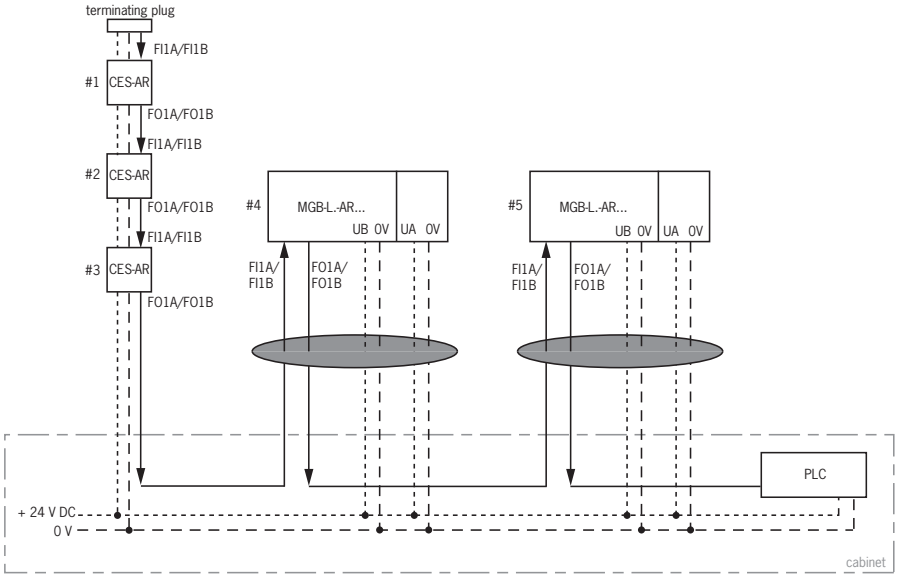

Important: lay cables in a common harness

Figure 20: Central wiring of an AR switch chain in the control cabinet

12.12.3. Number of devices in switch chains

In a pure MGB switch chain a maximum of ten devices can be connected in series. In mixed switch chains (e.g. MGB together with CES-AR) the maximum number of devices is also ten.

12.12.4. Resetting in switch chains

ℹ	**Important!** Use the reset input (RST) for resetting in AR switch chains. All devices in the chain must be reset simultaneously. Resetting individual switches will result in faults.

EN

13. Commissioning

13.1. Teach-in operation (only for MGB unicode)

The handle module must be assigned to the locking module using a teach-in function before the system comprising locking module and handle module forms a functional unit.

During a teach-in operation the safety outputs are switched off.

Important!

- The locking module disables the code for the previous handle module if teach-in is carried out for a new handle module. Teach-in is not possible again immediately for this actuator if a new teach-in operation is carried out. The disabled code is deleted in the locking module only after a third code has been taught.
- The locking module can be operated only with the last handle module taught.
- If, in the teach-in standby state, the locking module detects the handle module taught-in or a disabled handle module, the teach-in standby state is ended immediately and the locking module changes to normal operation.
- If the bolt tongue is in the operating distance for less than 60 s, the handle module is not taught.

Tip!

A teach-in adapter is available to make it easier to teach-in AR devices already mounted in series or for device replacement (order no. 122369). It is simply inserted between the connecting cable and the AR device. The device immediately enters teach-in operation on reconnection. After teach-in, the adapter is removed again and the MGB is connected normally.

Teaching in handle module

1. Fit handle module.
2. Close guard. Check for correct alignment and distance using the marking on the locking module and re-adjust if necessary.
3. Insert bolt tongue in the locking module.
4. Apply operating voltage to the locking module, optionally connect teach-in adapter.

➡ The green LED (State) flashes quickly (approx. 5 Hz). A self-test is performed during this time (approx. 10 s in case of AR configuration). Teach-in operation starts, green LED (State) flashes slowly (approx. 1 Hz). During the teach-in operation, the locking module checks whether the handle module is a disabled handle module. Provided this is not the case, the teach-in operation is completed after approx. 60 seconds, and the green LED (State) goes out. The new code has now been stored, and the old code is disabled.

5. To activate the handle module's code from the teach-in operation in the locking module, the operating voltage must then be switched off at the locking module for min. 3 seconds. As an alternative, 24V can be applied to the input RST for at least 3 seconds.

Teach-in in a series connection works analogously. Here, the complete series connection must be restarted using the input RST.

13.2. Mechanical function test

It must be possible to insert the bolt tongue easily in the locking module. To check, close guard several times and actuate door handle.

If available, check function of the escape release. With active guard locking it must be possible to operate the escape release from the inside without excessive effort (approx. 40 N).

13.3. Electrical function test

AR

⚠	**WARNING** On usage in a switch chain with different AR devices (e.g. CES-AR, CET-AR), also follow the procedure for the functional check in the related operating instructions.

DIP

With active guard locking monitoring

1. Switch on operating voltage.

➡ The locking module carries out a self-test. In case of AR configuration: The green State LED flashes for 10 s at 5 Hz. The green State LED then flashes at regular intervals.

2. Close all guards and insert the bolt tongue into the locking module.
   Guard locking by solenoid force: activate guard locking.

➡ The safety outputs FO1A/FO1B are ON

➡ The machine must not start automatically.

➡ It must not be possible to open the guard.

➡ The green State LED and the yellow Lock LED are illuminated continuously.

3. Enable operation in the control system.

➡ It must not be possible to deactivate guard locking as long as operation is enabled.

4. Disable operation in the control system and deactivate guard locking.

➡ The guard must remain locked until there is no longer any risk of injury.

➡ It must not be possible to start the machine as long as guard locking is deactivated.

➡ It must be possible to open the guard.

Repeat steps 2-4 for each guard.

With inactive guard locking monitoring

1. Switch on operating voltage.

➡ The locking module carries out a self-test. In case of AR configuration: The green State LED flashes for 10 s at 5 Hz. The green State LED then flashes at regular intervals.

2. Close all guards and insert the bolt tongue into the locking module. As soon as the bolt tongue is inserted in the locking module, the safety outputs FO1A/FO1B are ON. Independent of whether the guard locking is active or not.

➡ The machine must not start automatically.

➡ The green State LED illuminates continuously. The yellow Lock LED is ON for a long time with a short interruption or is ON continuously (depending on the state of the guard locking)

3. Enable operation in the control system.

4. If necessary deactivate guard locking and open guard.

➡ The machine must switch off and it must not be possible to start it as long as the guard is open.

Repeat steps 2-4 for each guard.

EN

14. Technical data

NOTICE

If a product data sheet is included with the product, the information on the data sheet applies in case of discrepancies with the operating instructions.

Parameter	Value		Unit
Housing material	Fiber glass reinforced plastic die-cast zinc, nickel-plated stainless steel		
Dimensions	See chapter *7.4. Dimension drawing on page 13*		
Weight Locking module Handle module Escape release	 0.75 1.00 0.50		kg
Ambient temperature at U_B = DC 24 V	-20 … +55		°C
Degree of protection Cover not populated/populated with buttons/indicators/selector switches Cover populated with key-operated switch Cover populated with key-operated rotary switch FS22	 IP 65 IP 54 IP 42		
Safety class	III		
Degree of contamination	3		
Installation position	Any		
Locking force F_{zh} acc. to EN ISO 14119	2,000		N
Connection	4 cable entries M20x1.5 or plug connector		
Conductor cross-section (rigid/flexible) - With ferrule according to DIN 46228/1 - With ferrule with collar according to DIN 46228/1	0.13 … 1.5 (AWG 24 … AWG 16) 0.25 … 1.5 0.25 … 0.75		mm^2
Operating voltage UB (reverse polarity protected, regulated, residual ripple < 5 %)	24 +10% / -15% (PELV)		V DC
Auxiliary voltage UA (reverse polarity protected, regulated, residual ripple < 5 %)	24 +10% / -15% (PELV)		V DC
Current consumption I_{UB} (no load on any outputs)	80		mA
Current consumption I_{UA} - With energized guard locking solenoid and unloaded outputs OI, OL, OT and OD - Pushbutton S (unloaded, per LED)	 375 5		mA
External fuse	See chapter *12.3. Fuse protection for power supply on page 24*		
Safety outputs FO1A/FO1B	**Semiconductor outputs, p-switching, short circuit-proof**		
Test pulses	AR < 1,000/AP < 300		µs
Test-pulse interval	Min. 100		ms
Output voltage U_{FO1A} / U_{FO1B} 1) HIGH U_{FO1A} / U_{FO1B} LOW U_{FO1A} / U_{FO1B}	 U_B-2V … U_B 0 … 1		 V DC
Switching current per safety output	1 … 200		mA
Switching current per control input IMP1, IMP2 and IMM	20 … 25		mA
Utilization category according to EN IEC 60947-5-2	DC-13 24 V 200 mA Caution: outputs must be protected with a free-wheeling diode in case of inductive loads.		
Monitoring outputs - Output voltage 1) - Max. load	p-switching, short circuit-proof U_A - 2V … U_A Max. 50		 mA
Rated insulation voltage U_i	30		V
Rated impulse withstand voltage U_{imp}	1.5		kV
Resilience to vibration	Acc. to EN IEC 60947-5-3		
Switching frequency	0.25		Hz
EMC protection requirements	Acc. to EN IEC 60947-5-3		
Reliability values acc. to EN ISO 13849-1	**Guard locking monitoring**	**Control of guard locking**	
Category	4	4	
Performance Level	PL e	PL e	
PFH_D	3.7×10^{-9} / h 2)	2.8×10^{-9} / h 2)	
Mission time	20	20	years
Mechanical life - In case of use as door stop, and 1 Joule impact energy	1×10^6 0.1×10^6		
B_{10D} (emergency stop)	0.065×10^6		
Emergency stop			
Operating voltage	5 … 24		V
Operating current	1 … 100		mA
Breaking capacity max.	250		mW
Power supply LED	24		V DC
Controls and indicators			
Operating voltage	UA		V
Operating current	1 … 10		mA
Breaking capacity max.	250		mW
Power supply LED	24		V DC

1) Values at a switching current of 50 mA without taking into account the cable length.
2) Applying the limit value from EN ISO 13849-1:2008, section 4.5.2 (MTTFd = max. 100 years), the employers' liability insurance association certifies a PFHd of max. 2.47×10^{-8}.

14.1. Radio frequency approvals (for devices with FCC ID and IC on the type label)

Product description: Safety Switch

FCC ID: 2AJ58-09
IC: 22052-09

FCC/IC-Requirements

This device complies with part 15 of the FCC Rules and with Industry Canada's licence-exempt RSSs. Operation is subject to the following two conditions:

1) This device may not cause harmful interference, and

2) this device must accept any interference received, including interference that may cause undesired operation.

Changes or modifications not expressly approved by the party responsible for compliance could void the user's authority to operate the equipment.

NOTE: This equipment has been tested and found to comply with the limits for a Class A digital device, pursuant to part 15 of the FCC Rules. These limits are designed to provide reasonable protection against harmful interference when the equipment is operated in a commercial environment. This equipment generates, uses, and can radiate radio frequency energy and, if not installed and used in accordance with the instruction manual, may cause harmful interference to radio communications. Operation of this equipment in a residential area is likely to cause harmful interference in which case the user will be required to correct the interference at his own expense.

Le présent appareil est conforme aux CNR d'Industrie Canada applicables aux appareils radio exempts de licence. L'exploitation est autorisée aux deux conditions suivantes :

(1) l'appareil ne doit pas produire de brouillage, et

(2) l'utilisateur de l'appareil doit accepter tout brouillage radioélectrique subi, même si le brouillage est susceptible d'en compromettre le fonctionnement.

This device complies with the Nerve Stimulation Exposure Limits (ISED SPR-002) for direct touch operations.

Cet appareil est conforme aux limites d'exposition relatives à la stimulation des nerfs (ISED CNR-102) pour les opérations tactiles directes.

Supplier's Declaration of Conformity
47 CFR § 2.1077 Compliance Information

Unique Identifier:
MGB-L0-AR Series
MGB-L1-AR Series
MGB-L2-AR Series
MGB-L0-AP Series
MGB-L1-AP Series
MGB-L2-AP Series

Responsible Party – U.S. Contact Information
EUCHNER USA Inc.
6723 Lyons Street
East Syracuse, NY 13057

+1 315 701-0315
+1 315 701-0319
info(at)euchner-usa.com
http://www.euchner-usa.com

EN

14.2. Typical system times

Important!

The system times given are maximum values for one device.

Ready delay:

AR ***In case of AR configuration the following applies:*** After switching on, the unit carries out a self-test for 10 s. The system is ready for operation only after this time.

AP ***In case of AP configuration the following applies:*** After switching on, the unit carries out a self-test for 0.5 s. The system is ready for operation only after this time.

Switch-on time of safety outputs:

AR ***In case of AR configuration the following applies:*** The max. reaction time from the moment when the guard is locked to the moment when the safety outputs switch on T_{on} is 570 ms.

AP ***In case of AP configuration the following applies:*** The max. reaction time from the moment when the bolt tongue is inserted to the moment when the safety outputs switch on T_{on} is 570 ms.

AR **Simultaneity monitoring, safety inputs FI1A/FI1B:** If the safety inputs have different switching states for longer than 150 ms, the safety outputs FO1A/FO1B will be switched off. The device switches to fault state.

Risk time according to EN 60947-5-3:

DIP ***With active guard locking monitoring the following applies:*** If the guard locking is no longer effective, the safety outputs FO1A and FO1B are deactivated after a maximum of 350 ms.

This value applies to a single switch. For each additional switch in a chain the risk time increases by 5 ms.

DIP ***With inactive guard locking monitoring the following applies:*** If the bolt tongue is pulled out of the locking module, the safety outputs FO1A and FO1B are deactivated after a maximum of 350 ms.

This value applies to a single switch. For each additional switch in a chain the risk time increases by 5 ms.

Difference time: The safety outputs FO1A and FO1B switch with a slight delay in relation to each other. They both have the ON state at the latest after a difference time of 10 ms.

Time offset: The max. permissible time offset between switch-on of operating voltage UB and auxiliary voltage UA is 1 s.

15. System states

15.1. Key to symbols

○	LED not illuminated
✳	LED illuminated
✳ 10 Hz (8 s)	LED flashes for 8 seconds at 10 Hz
✳ 3 x	LED flashes three times
X	Any state

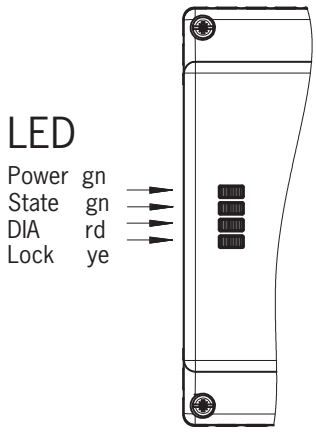

15.2. System status table MGB-AR

Operating mode	Safety outputs FI1A and FI1B	Door position	Position of the bolt tongue	Guard locking	Safety outputs FO1A and FO1B	Door monitoring output (OD)	Bolt tongue monitoring output (OT)	Guard locking monitoring output (OL)	Diagnostics monitoring output (OI)	LED indicator: Power (green)	LED indicator: STATE (green)		LED indicator: DIA (red)	LED indicator: Lock (yellow)		State
Self-test	X	X	X	X	OFF	OFF	OFF	OFF	OFF			5 Hz		○		Self-test after power-up
Normal operation	X	open	not inserted	OFF	OFF	OFF	OFF	OFF	OFF			Long OFF short ON		○		Normal operation, door open
	X	closed	not inserted	OFF	OFF	ON	OFF	OFF	OFF			Long ON, short OFF		○		Normal operation, door closed
	OFF	closed	inserted	OFF	OFF	ON	ON	OFF	OFF			Long ON, short OFF			Long ON, short OFF	Normal operation, door closed, bolt tongue inserted safety inputs FI1A/FI1B OFF
	ON	closed	inserted	OFF	OFF	ON	ON	OFF	OFF			Long ON, short OFF	○		Long ON, short OFF	**With active guard locking monitoring:** Normal operation, door closed, bolt tongue inserted. Safety inputs FI1A/FI1B are ON. Safety outputs FO1A and FO1B are OFF
					ON											**With inactive guard locking monitoring:** Normal operation, door closed, bolt tongue inserted. Safety inputs FI1A/FI1B are ON. Safety outputs FO1A and FO1B are ON
	OFF	closed	inserted	ON	OFF	ON	ON	ON	OFF			Long ON, short OFF				**Operation in an AR chain:** Normal operation, door closed and locked. Safety outputs on the previous device OFF
	ON	closed	inserted	ON	ON	ON	ON	ON	OFF							**Operation as separate device:** Normal operation, door closed and locked.
																Operation in an AR chain: Normal operation, door closed and locked. Safety outputs on the previous device ON
Teach-in standby (only for MGB unicode)	X	open	not inserted	OFF	OFF	OFF	OFF	OFF	OFF			3 x		○		Door open; device is ready for teach-in of another handle module (only 3 min. after Power UP)
Commissioning (only for MGB unicode)	X	closed	inserted	ON	OFF	OFF	OFF	OFF	OFF			1 Hz		○		Teach-in operation, tip: To prevent the interruption of teach-in operations, close door and switch on guard locking.
	X	X	X	X	OFF	OFF	OFF	OFF	OFF		○			○		Positive acknowledgment after completion of teach-in operation
Diagnostics	X	X	X	X	OFF	OFF	OFF	OFF	ON			1 x		○		Error during teach-in/configuration or invalid DIP switch setting
	erroneous	X	X	X	OFF	OFF	OFF	OFF	ON			2 x		○		FI1A/FI1B input error (e.g. missing test pulses, illogical switching state from previous switch)
	X	X	X	X	OFF	X	X	X	OFF			3 x		○		Handle module read error (e.g. error in code)
	X	X	X	X	OFF	OFF	OFF	OFF	ON			4 x		○		Output fault (e.g. short circuit, loss of switching capability) or short circuit at the outputs
	X	X	X	X	X	OFF	OFF	OFF	ON		○			○		Internal fault (e.g. component faulty, data error)
	X	X	X	X	OFF	OFF	OFF	OFF	ON		○				1 x	Signal sequence erroneous (e.g. broken bolt tongue) With active release monitoring: escape release or auxiliary release was actuated.
	X	X	X	X	X	OFF	OFF	OFF	ON		○				2 x	Control inputs IMP1, IMP2, IMM invalid; switch off control inputs for min. ½ s and switch on again to reset

After remedying the cause, use the reset function (see chapter *16. Troubleshooting and assistance on page 41*) or briefly disconnect the power supply. Please contact the manufacturer if the fault could not be reset after restarting.
Important: If you do not find the displayed device status in the system status table, this indicates an internal device fault. In this case, you should contact the manufacturer.

15.3. System status table MGB-AP

Operating mode	Door position	Position of the bolt tongue	Guard locking	Safety outputs FO1A and FO1B	Door monitoring output (OD)	Bolt tongue monitoring output (OT)	Guard locking monitoring output (OL)	Diagnostics monitoring output (OI)	LED indicator: Power (green)	LED indicator: State (green)	LED indicator: DIA (red)	LED indicator: Lock (yellow)	State
Normal operation	open	not inserted	OFF	OFF	OFF	OFF	OFF	OFF	☀	Long OFF short ON	○	○	Normal operation, door open
	closed	not inserted	OFF	OFF	ON	OFF	OFF	OFF	☀	Long ON, short OFF	○	○	Normal operation, door closed
	closed	inserted	OFF	OFF	ON	ON	OFF	OFF	☀	Long ON, short OFF	○	☀	**With active guard locking monitoring:** Normal operation, door closed, bolt tongue inserted. Safety outputs FO1A and FO1B are OFF
				ON					☀				**With inactive guard locking monitoring:** Normal operation, door closed, bolt tongue inserted. Safety outputs FO1A and FO1B are ON
	closed	inserted	ON	ON	ON	ON	ON	OFF	☀		○	☀	Normal operation, door closed and locked.
Teach-in standby (only for MGB unicode)	open	not inserted	OFF	OFF	OFF	OFF	OFF	OFF	☀	3 x	○	○	Door open; device is ready for teach-in of another handle module (only 3 min. after Power UP)
Commissioning (only for MGB unicode)	closed	inserted	ON	OFF	OFF	OFF	OFF	OFF	☀	1 Hz	○	○	Teach-in operation, tip: To prevent the interruption of teach-in operations, close door and switch on guard locking.
	X	X	X	OFF	OFF	OFF	OFF	OFF	○		○	○	Positive acknowledgment after completion of teach-in operation
Diagnostics	X	X	X	OFF	OFF	OFF	OFF	ON	☀	1 x	☀	○	Error during teach-in/configuration or invalid DIP switch setting
	X	X	X	OFF	X	X	X	OFF	☀	3 x	○	○	Handle module read error (e.g. error in code)
	X	X	X	OFF	OFF	OFF	OFF	ON	☀	4 x	○	○	Output fault (e.g. short circuit, loss of switching capability) or short circuit at the outputs
	X	X	X	X	OFF	OFF	OFF	ON	○		○	○	Internal fault (e.g. component faulty, data error)
	X	X	X	OFF	OFF	OFF	OFF	ON	○		☀	1 x	Signal sequence erroneous (e.g. broken bolt tongue) With active release monitoring: escape release or auxiliary release was actuated.
	X	X	X	X	OFF	OFF	OFF	ON	○		☀	2 x	Control inputs IMP1, IMP2, IMM invalid; switch off control inputs for min. ½ s and switch on again to reset

After remedying the cause, use the reset function (see chapter *16. Troubleshooting and assistance on page 41*) or briefly disconnect the power supply. Please contact the manufacturer if the fault could not be reset after restarting.
Important: If you do not find the displayed device status in the system status table, this indicates an internal device fault. In this case, you should contact the manufacturer.

16. Troubleshooting and assistance

16.1. Fault reset

Proceed as follows:

1. Open the guard.
2. Switch off operating voltage at the locking module for min. 3 seconds or connect 24 V to the input RST for min. 3 seconds.
   Alternatively, the internal reset (see *7. System overview on page 12*) can be pressed for 3 seconds with a pointed object, e.g. ball-point pen.

➡ The green LED (State) flashes quickly (approx. 5 Hz in case of AR configuration). A self-test is performed during this time (approx. 10 s in case of AR configuration). The LED then cyclically flashes three times.

3. Close guard and switch on guard locking.

➡ The system is in normal operation again.

16.2. Help on troubleshooting in the Internet

You will find a help file on troubleshooting under *Support* in the service area at www.euchner.com.

16.3. Help on mounting in the Internet

You will find an animation on the mounting process at www.euchner.com.

16.4. Application examples

You will find application examples on connecting the device to various control systems at www.euchner.com.

17. Service

If service support is required, please contact:

EUCHNER GmbH + Co. KG
Kohlhammerstraße 16
70771 Leinfelden-Echterdingen
Germany

Service telephone:

+49 711 7597-500

E-mail:

info@euchner.de

Internet:

www.euchner.com

EN

18. Inspection and service

WARNING

Loss of the safety function because of damage to the system.

- In case of damage, the affected module must be replaced completely. Only accessories or spare parts that can be ordered from www.euchner.com may be replaced.
- Check the device for proper function at regular intervals and after every fault. For information about possible time intervals, refer to EN ISO 14119:2013, section 8.2.

Regular inspection of the following is necessary to ensure trouble-free long-term operation:

- Check the switching function (see chapter *13.3. Electrical function test on page 35*)
- Check the secure fastening of the devices and the connections
- Check for soiling

No servicing is required. Repairs to the device are only allowed to be made by the manufacturer.

NOTICE

The year of manufacture can be seen in the lower right corner of the type label.

19. Declaration of conformity

CE

EUCHNER
More than safety.

EU-Konformitätserklärung
EU declaration of conformity
Déclaration UE de conformité
Dichiarazione di conformità UE
Declaración UE de conformidad

Original DE
Translation EN
Traduction FR
Traduzione IT
Traducción ES

2123150-08-01/17

Die nachfolgend aufgeführten Produkte sind konform mit den Anforderungen der folgenden Richtlinien (falls zutreffend):
The beneath listed products are in conformity with the requirements of the following directives (if applicable):
Les produits mentionnés ci-dessous sont conformes aux exigences imposées par les directives suivantes (si valable)
I prodotti sotto elencati sono conformi alle direttive sotto riportate (dove applicabili):
Los productos listados a continuación son conforme a los requisitos de las siguientes directivas (si fueran aplicables):

I:	Maschinenrichtlinie	2006/42/EG	
	Machinery directive	*2006/42/EC*	
	Directive Machines	*2006/42/CE*	
	Direttiva Macchine	*2006/42/CE*	
	Directiva de máquinas	*2006/42/CE*	
II:	Funkanlagen-Richtlinie (RTTE / RED)	1999/5/EC bis 2017-06-12	2014/53/EU ab 2017-06-13
	Radio equipment directive	*1999/5/EC until 2017-06-12*	*2014/53/EU from 2017-06-13*
	Directive équipement radioélectrique	*1999/5/CE*	*2014/53/UE*
	Direttiva apparecchiatura radio	*1999/5/CE*	*2014/53/UE*
	Directiva equipo radioeléctrico	*1999/5/CE*	*2014/53/UE*
III:	RoHS Richtlinie	2011/65/EU	
	RoHS directive	*2011/65/EU*	
	Directive de RoHS	*2011/65/UE*	
	Direttiva RoHS	*2011/65/UE*	
	Directiva RoHS	*2011/65/UE*	

Die Schutzziele der Niederspannungsrichtlinie 2014/35/EU und EMV Richtlinie 2014/30/EU werden gemäß Artikel 3.1 der Funkanlagen-Richtlinie eingehalten.
The safety objectives of the Low-voltage directive 2014/35/EU and EMC Directive 2014/30/EU comply with article 3.1 of the Radio equipment directive.
Les objectifs de sécurité de la Directive basse tension 2014/35/UE et Directive de CEM 2014/30/EU sont conformes à l'article 3.1 de la Directive équipement radioélectrique.
Gli obiettivi di sicurezza della Direttiva bassa tensione 2014/35/UE e Direttiva CEM 2014/30/UE sono conformi a quanto riportato nell´articolo 3.1 della Direttiva apparecchiatura radio.
Los objetivos de seguridad de la Directiva de bajo voltaje 2014/35/UE y Directiva CEM 2014/30/UE cumplen con el articulo 3.1 de la Directiva equipo radioeléctrico.

Folgende Normen sind angewandt:
Following standards are used:
Les normes suivantes sont appliquées:
Vengono applicate le seguenti norme:
Se utilizan los siguientes estándares:

a: EN 60947-5-3:2013
b: EN ISO 14119:2013
c: EN ISO 13849-1:2015
d: EN 60947-5-5:1997/A1:2005/A11:2013
e: EN 50364:2010
f: EN 300 330-2 V1.6.1
g: EN 50581:2012 (RoHS)

Bezeichnung der Bauteile *Description of components* *Description des composants* *Descrizione dei componenti* *Descripción de componentes*	**Type** *Type* *Type* *Tipo* *Typo*	**Richtlinie** *Directives* *Directive* *Direttiva* *Directivas*	**Normen** *Standards* *Normes* *Norme* *Estándares*	**Zertifikats-Nr.** *No. of certificate* *Numéro du certificat* *Numero del certificato* *Número del certificado*
Sicherheitsschalter *Safety Switches* *Interrupteurs de sécurité* *Finecorsa di sicurezza* *Interruptores de seguridad*	MGB-L...-AR... MGB-L...-AP... MGB-H... MGB-E... MGB-C...	I, II	a, b, c, e, f, g	UQS 123125
Sicherheitsschalter mit Not-Halt-Einrichtungen *Safety Switches with Emergency-Stop facilities* *Interrupteurs de sécurité avec appareillage arrêt d'urgence* *Finecorsa di sicurezza con dispositivi di arresto di emergenza* *Interruptores de seguridad con dispositivos de parada de emergencia*	MGB-L...-AR... MGB-L...-AP... MGB-C...	I, II	a, b, c, d , e, f, g	UQS 123125

Genehmigung der umfassenden Qualitätssicherung (UQS) durch die benannte Stelle 0035
Approval of the full quality assurance system by the notified body 0035
Approbation du système d'assurance qualité complet par l'organisme notifié 0035
Approvazione del sistema di garanzia di qualità totale da parte dell'organismo notificato 0035
Aprobación del sistema de aseguramiento de calidad total por parte del organismo 0035 notificado

TÜV Rheinland Industrie Service GmbH
Alboinstrasse 56
12103 Berlin
Germany

30.01.2017 - NG -KM - Blatt/*Sheet/ Page/Pagina/ Página* 1
EUCHNER GmbH + Co. KG Kohlhammerstraße 16 70771 Leinfelden-Echterdingen Tel. +49/711/7597-0 Fax +49/711/753316 www.euchner.de info@euchner.de

EN

CE

EUCHNER
More than safety.

Die alleinige Verantwortung für die Ausstellung dieser Konformitätserklärung trägt der Hersteller:
This declaration of conformity is issued under the sole responsibility of the manufacturer:
La présente déclaration de conformité est établie sous la seule responsabilité du fabricant:
La presente dichiarazione di conformità è rilasciata sotto la responsabilità esclusiva del fabbricante:
La presente declaración de conformidad se expide bajo la exclusiva responsabilidad del fabricante:

EUCHNER GmbH + Co. KG
Kohlhammerstraße 16
70771 Leinfelden-Echterdingen
Germany

Leinfelden, Januar 2017

EUCHNER GmbH + Co. KG
Kohlhammerstraße 16
70771 Leinfelden-Echterdingen
Germany

i.A. Dipl.-Ing. Richard Holz
Leiter Elektronik-Entwicklung
Manager Electronic Development
Responsable Développement Électronique
Direttore Sviluppo Elettronica
Director de desarrollo electrónico

i.A. Dipl.-Ing. (FH) Duc Binh Nguyen
Dokumentationsbevollmächtigter
Documentation manager
Responsable documentation
Responsabilità della documentazione
Agente documenta

30.01.2017 - NG -KM - Blatt/*Sheet/ Page/Pagina/ Página* 2
EUCHNER GmbH + Co. KG Kohlhammerstraße 16 70771 Leinfelden-Echterdingen Tel. +49/711/7597-0 Fax +49/711/753316 www.euchner.de info@euchner.de

EN

EN

Euchner GmbH + Co. KG
Kohlhammerstraße 16
70771 Leinfelden-Echterdingen
Germany
info@euchner.de
www.euchner.com

Edition:
2119167-06-06/20
Title:
Operating Instructions Safety Systems
MGB-L1…-AR.-… / MGB-L2…-AR.-… and
MGB-L1…-AP.-… / MGB-L2…-AP.-… from V3.0.0
(translation of the original operating instructions)
Copyright:
© EUCHNER GmbH + Co. KG, 06/2020

Subject to technical modifications; no responsibility is accepted for the accuracy of this information.